Autodesk Factory Design Suite 2011 Learning Essentials

Autodesk®

FREE EDUCATION CONTENT LICENSE AGREEMENT

This Free Education Content License Agreement ("**Agreement**"), is between you ("**Content User**") and **AUTODESK, INC.** ("**Autodesk**"), a Delaware corporation, having a principal place of business located at 111 McInnis Parkway, San Rafael, CA 94903, and becomes effective when you download or otherwise obtain Content, as defined herein, from Autodesk. You may not accept this Agreement on behalf of another entity unless you are an employee or other agent of such other entity with the right, power and authority to act on behalf of such other entity.

1. Definitions.

1. 1 "**Content**" means Autodesk Factory Design Suite Training Courseware and/or learning content, including any recording, transcription, or adaptation, and all images, files, video clips or other information or material of any kind developed, enhanced and/or provided or made available by Autodesk to Content User hereunder.

1.2 "**Updated Content**" means only the incremental additions to the Content prepared by Content User in accordance with this Agreement. Updated Content expressly excludes any Content.

2. Content License

2.1 License Grant. Subject to the terms and conditions of this Agreement, Autodesk grants to Content User and Content User accepts a non-exclusive, non-transferable, non-sub-licensable, worldwide, limited license to use the Content and to supplement the Content as necessary to create Updated Content, in accordance with this Agreement.

2.2 Notices and Acknowledgment. Content User shall not remove or modify any copyright notices or similar statements contained in Content. Without limiting the foregoing, Content User shall include an acknowledgement when any of the Content is used in its entirety as is, or combined with additional Content contributed by Content User, that as applicable, the original or modified Content was in part based on education content obtained from Autodesk. Such attribution shall be reasonably conspicuous in format and location, and may occur where Content User includes other, similar notices and attributions within original or Updated Content.

3. Autodesk and Content User Rights.

3.1 Autodesk Rights. As between Content User and Autodesk, Autodesk does and shall own all intellectual property rights, including but not limited to trade secret rights, copyrights, trademarks or patent rights, in and to the Content and the Software. Neither Content User nor any third party shall have any rights therein except as expressly set forth in this Agreement.

3.2 Content User Rights. As between Content User and Autodesk, Content User does and shall own all intellectual property rights, including but not limited to trade secret rights, copyrights, trademarks or patent rights, in and to the Updated Content, provided that such rights are subject and subordinate to Autodesk's underlying intellectual property rights in and to the Content and/or software on which such Content is based and/or from which such Updated Content is derived.

4. No Warranty.

THE CONTENT PROVIDED HEREUNDER IS PROVIDED "AS IS", WITHOUT WARRANTY OF ANY KIND. CONTENT USER ACKNOWLEDGES THAT IT USES SUCH CONTENT AT ITS OWN RISK. TO THE MAXIMUM EXTENT PERMITTED BY APPLICABLE LAW, AUTODESK AND ITS SUPPLIERS MAKE, AND CONTENT USER RECEIVES, NO WARRANTIES, REPRESENTATIONS, OR CONDITIONS OF ANY KIND, EXPRESS OR IMPLIED (INCLUDING, WITHOUT LIMITATION, ANY IMPLIED WARRANTIES OF MERCHANTABILITY, FITNESS FOR A PARTICULAR PURPOSE, OR NONINFRINGEMENT, OR WARRANTIES OTHERWISE IMPLIED BY STATUTE OR FROM A COURSE OF DEALING OR USAGE OF TRADE) WITH RESPECT TO ANY CONTENT OR THIS AGREEMENT. ANY STATEMENTS OR REPRESENTATIONS ABOUT THE CONTENT ARE FOR INFORMATION PURPOSES ONLY, AND DO NOT CONSTITUTE A WARRANTY, REPRESENTATION,

OR CONDITION. WITHOUT LIMITING THE FOREGOING, AUTODESK DOES NOT WARRANT: (a) THAT THE CONTENT IS ACCURATE, RELIABLE, OR COMPLETE; (b) THAT ERRORS IN THE CONTENT WILL BE CORRECTED BY AUTODESK OR ANY THIRD PARTY; OR (c) THAT THE CONTENT WILL MEET CONTENT USER'S REQUIREMENTS OR EXPECTATIONS. NOTHING IN THE FOREGOING RESTRICTS THE EFFECT OF WARRANTIES OR CONDITIONS WHICH MAY BE IMPLIED BY LAW WHICH CANNOT BE EXCLUDED, RESTRICTED OR MODIFIED NOTWITHSTANDING A CONTRACTUAL RESTRICTION TO THE CONTRARY.

5. Compliance with Laws.

Content User shall comply with all applicable international, national, state, provincial, regional and local laws and regulations in exercising its rights or fulfilling its obligations hereunder. Content User agrees and understands that the Content, and any related technical data, provided by Autodesk under this Agreement are subject to United States laws and regulations, which may restrict or prohibit resale or other transfers to other countries and parties. Emd Iser agrees that no Content or related technical information provided under this Agreement will be exported, transferred, or disclosed contrary to the applicable laws and regulations of the United States, or to any country, entity or other party which is ineligible to receive such items under U.S. laws and regulations, including regulations of the U.S. Department of Commerce or the U.S. Department of the Treasury. Content User agrees and understands it shall be solely responsible for: (i) complying with applicable U.S. laws and regulations and (ii) monitoring any modifications to them. Solely for information purposes, and without any obligation on the part of Autodesk to provide additional or updated information, further information about relevant U.S. laws and regulations is typically provided at websites maintained by the U.S. Treasury Department [http://www.ustreas.gov/ofac/] and the U.S. Commerce Department [http://www.bis.doc.gov/]. Content User shall also be solely responsible for: (i) complying with applicable laws and regulations of Publisher's country which restrict or prohibit exports and (ii) monitoring any modifications to such laws and regulations. Publisher's failure to comply with U.S. foreign trade and export laws and regulations, or those of Content User's country, shall be deemed a material breach of this Agreement. Content User shall notify Autodesk immediately upon learning that it has exported, transferred or disclosed any Source Materials or Content to any country, entity or other party which is ineligible to receive such items under U.S. laws and regulations or those of Content User's country.

6. Indemnity and Limitation of Liability.

6.1 Content User's Indemnity.

(a) *By Content User* Publisher agrees to indemnify, hold harmless and defend Autodesk, its officers, directors, affiliates, subsidiaries, employees, representatives, agents and Content Users from any claim, liability, damage or expense, including but not limited to legal expenses, of whatever kind as a result of (i) any liabilities that arise from a third party's claim of infringement or other misappropriation of such third party's intellectual property rights in connection with any additional content contributed by Content User or publication or distribution or other activities set forth in this Agreement; (ii) any liabilities that arise from Content User's breach of this Agreement ; or (iii) EndUser's violation of any statute, ordinance or regulation.

(b) *Procedure*. Autodesk, at its own expense, shall have the right to participate in the defense of any such action through its own counsel, which shall coordinate its activities with counsel provided by Publisher pursuant to this section.

6.2 LIMITATION OF LIABILITY. EXCEPT WITH RESPECT TO CONTENT USER'S OBLIGATIONS SET FORTH IN SECTIONS, 4, AND 5, NEITHER CONTENT USER NOR AUTODESK SHALL BE LIABLE FOR ANY INCIDENTAL, INDIRECT, SPECIAL OR CONSEQUENTIAL DAMAGES, INCLUDING BUT NOT LIMITED TO LOST PROFITS, EVEN IF SUCH PARTY HAS BEEN ADVISED OF THE POSSIBILITY OF SUCH DAMAGES. THE ENTIRE AND AGGREGATE LIABILITY OF EITHER PARTY SHALL NOT EXCEED THE FEES PAID OR PAYABLE, IF DUE BUT UNPAID, HEREUNDER. CONTENT USER'S EXCLUSIVE REMEDY FOR ALL CLAIMS OF ANY NATURE, WHETHER ARISING IN CONTRACT, TORT, WARRANTY, IN LAW, OR IN EQUITY, AGAINST AUTODESK SHALL BE LIMITED SOLELY TO CONTENT USER'S DIRECT DAMAGES AS LIMITED IN AMOUNT BY THIS SECTION 6.2.

7. Term and Termination.

7.1 Term of Agreement. This Agreement shall commence upon Content User's downloading or use of Content.

7.2 Termination for Convenience. Autodesk may terminate this Agreement at any time for any reason or for

no reason upon thirty (30) days' prior written notice to Content User.

7.3 Termination for Cause. This Agreement shall terminate automatically, without notice, should Content User materially breach its terms, and such breach remain uncured after five (5) days following its occurrence.

7.4 Effect of Termination. Upon termination of this Agreement, Content User shall immediately cease using in any manner and destroy all Content then in Content User's possession.

7.5 Survival. Sections 1, 2.2, 4, 5, 6, 7 and 8, inclusive, of this Agreement shall survive termination of this Agreement.

8. Miscellaneous Provisions.

8.1 Governing Law. This Agreement shall be governed in all respects by and construed under the laws of the United States of America and the State of California without reference to choice of law principles. The parties hereby submit to the exclusive jurisdiction of and waive any venue objections against the United States District Court for the Northern District of California, San Francisco and the state courts in Marin County in any litigation arising out of this Agreement. The parties hereto expressly exclude the application of the United Nations Convention on Contracts for the International Sale of Goods.

8.2 Construction. If any provision or provisions of this Agreement shall be held to be invalid, illegal, or unenforceable, the validity, legality, and enforceability of the remaining provisions shall not in any way be affected or impaired.

8.3 Entire Agreement. This Agreement constitutes the entire agreement between the parties with respect to the subject matter hereof, and supersedes all prior negotiations and agreements with respect to its subject matter, whether oral or written. Autodesk may amend the terms of this Agreement at any time, by posting amended terms to the web page where the prior terms were located. Such posting of amended terms shall constitute sufficient notice to Publisher of such updates.

8.4 Waiver. No consent by either party to, or waiver of, a breach of this Agreement by the other party, whether express or implied, shall constitute a consent to, waiver of, or excuse for any other different or subsequent breach by the other party. No waiver shall be effective unless in writing and signed by an authorized representative of the party to be bound. Failure to pursue, or delay in pursuing, any remedy for a breach shall not constitute a waiver of such breach.

8.5 Independent Contractors. In performing their respective duties under this Agreement, each of the parties will be operating as an independent contractor. Nothing contained herein will in any way constitute any association, partnership, joint venture or employment agreement between the parties hereto, or be construed to evidence the intention of the parties to establish any such relationship. Neither of the parties will hold itself out in any manner that would be contrary to the provisions of this section.

8.6 Other Remedies. Except as expressly provided herein, any and all remedies herein conferred upon a party will be deemed cumulative with and not exclusive of any other remedy conferred hereby, or by law or equity upon such party, and the exercise by a party of any one remedy will not preclude the exercise of any other remedy.

Contents

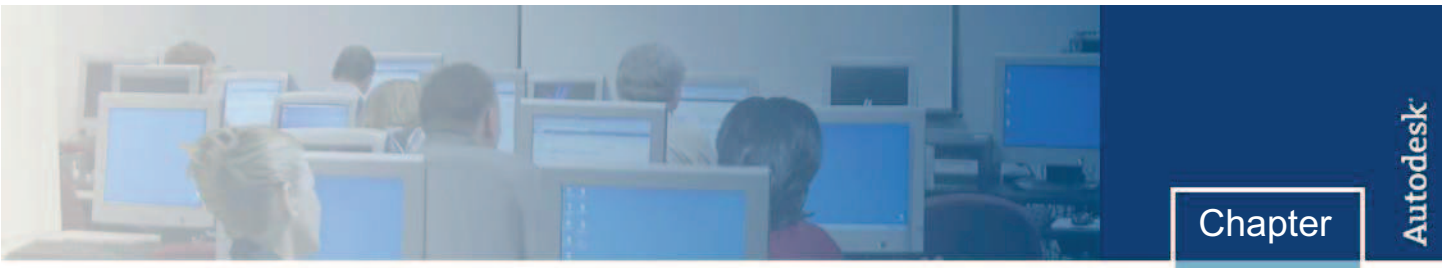

Chapter

1

Autodesk Factory Design Suite

Autodesk Factory Design Suite is a 2D/3D factory layout solution purpose-built to help you make better layout decisions by enabling you to create a Digital Prototype of your factory. It provides tools for integrating 2D layout data with 3D models of factory equipment, creating accurate factory models and 3D visual walkthroughs that help teams collaborate effectively and make more informed decisions before any equipment is installed and commissioned on the factory floor.

Core Products

Core products in the Suite include AutoCAD Architecture, Autodesk Navisworks, Autodesk Vault, and Autodesk Inventor enhanced with the Autodesk Factory Design Utility that gives users a factory-specific parametric work environment to better design, optimize, and visualize factory layouts.

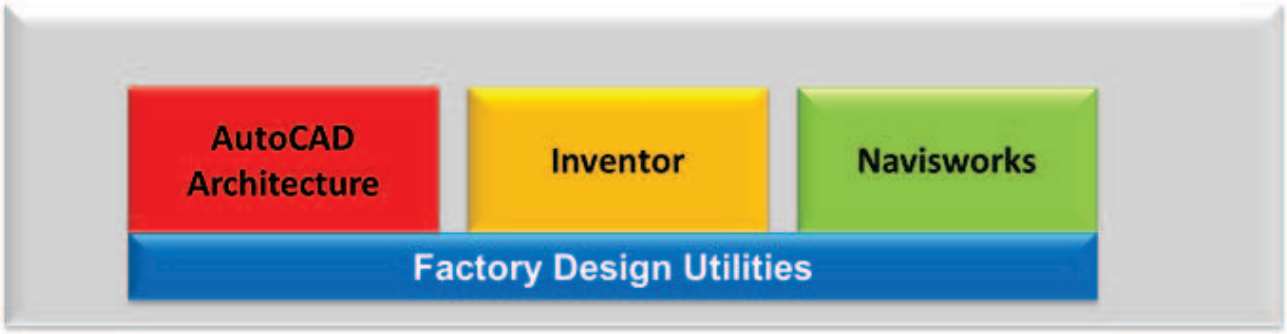

AutoCAD Architecture

The most complex and intricate 3D Factory Layout designs begin as simple 2D facility drawings. The Autodesk Factory Design Suite delivers state of the art 2D design capabilities by providing the most versatile and dynamic drawing generation package in use today, AutoCAD.

AutoCAD Architecture is the initial 2D design component of the Autodesk Factory Suite. AutoCAD, as well as the DWG file format, has served as the design and documentation standard for both buildings and factory components for over 25 years. The development of facility drawings is the primary focus of the initial element in the Autodesk Factory Suite. Designers need a tool to easily layout and develop Walls, Windows, and other architectural elements as the initial 2D design comes together.

AutoCAD Architecture provides you the flexibility to work in the traditional AutoCAD environment if required, or in the AutoCAD Architectural workspace, where you have access to specific commands for Walls, Doors, Windows, Beams, and many more Architectural design elements. These Architecturally specific commands provide productive and efficient methods of creating facility layouts.

Fitting your new Factory Layout into an existing building offers several costly and counterproductive challenges. Capturing the “As Built” state of an existing facility with 2D tape measurements is a tedious, time consuming, and above all, error prone process.

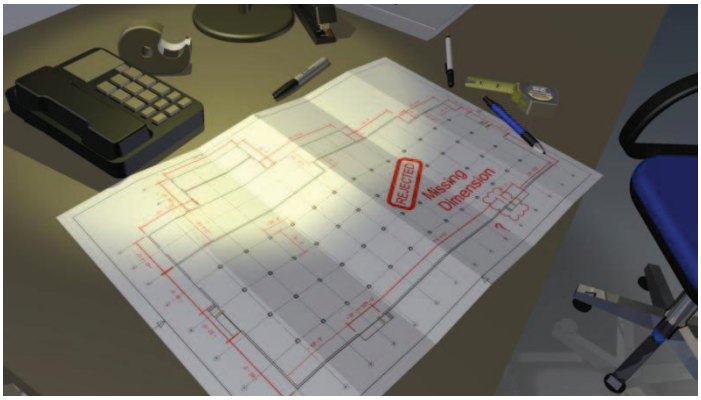

The ability to utilize Laser Scan Point Clouds to record the “As Built” state of an existing facility reduces the amount of time needed to document the design. These Point Clouds can be added to your 2D AutoCAD designs to facilitate space reservations in context of the “As Built” State of the facility.

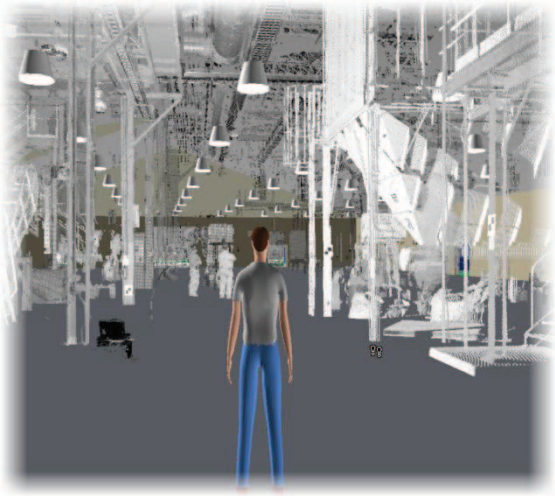

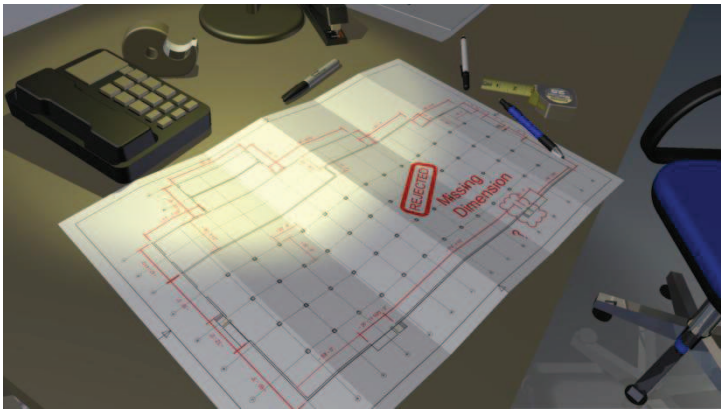

Generating Factory Layout proposals is “by nature” a costly process. Often, the “Free Work” necessary to submit several proposals only results in a single contract. Factory Layout designers need a purpose built 2D and 3D solution that allows them to quickly and efficiently produce Factory Layouts that communicate their design intent to everyone. Autodesk Factory Design Suite extends the benefits of Digital Prototyping to the factory floor. Purpose built for Machine Builders, System Integrators and Manufacturers, it helps you to make better layout decisions earlier in the design process in order to meet tighter schedules, optimize your factory layout processes, and, above all, win more business.

Autodesk Inventor Enhanced with the Factory Design Utilities

The nature of the Two Dimensional Factory Layout process requires a good deal of time and attention to numerous details. The Autodesk Factory Design Suite helps factory layout users save hours of effort, so they can spend time innovating rather than drafting. Users can take advantage of their existing layout data and expertise to build an accurate digital model of the factory, quickly try multiple layout ‘what if’ scenarios, and communicate the best solution to stakeholders and partners.

Autodesk Inventor, enhanced with the Autodesk Factory Design Utility, gives users a factory-specific parametric work environment to better design, optimize, and visualize factory layouts. Users can quickly grasp the simplified workflow without expertise in 3D modeling practices.

The Autodesk Factory Design Utility introduces Inventor users to the floor concept. The customizable Floor provides gravity, so anything placed on it will automatically land upright, eliminating the need to understand classic 3D paradigms and figure out how to constrain and align components. Designers can easily leverage existing 2D layout drawings, using them to paint reference lines on the Factory Floor.

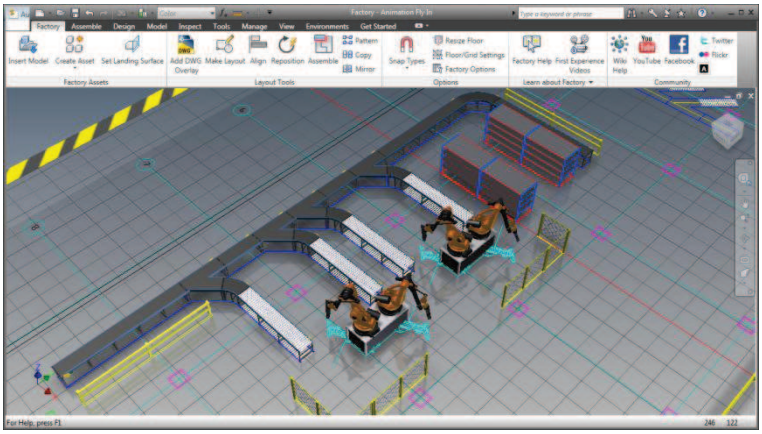

The Factory Model is built by dragging and dropping 3D models of machines and other facility equipment directly on the 2D layout from a library of commonly used Factory Assets. The Assets contain built-in connectors that allow them to sense one another and snap together like building bricks. The Assets also contain built-in parameters that enable easy modification to the basic asset design.

You can easily build and include your own 3D factory asset models in the layout. Any existing models, acquired from various sources, can be used as Factory Assets. The Asset creation process simply requires designers to assign a landing surface and connector points to the model. The Asset is then saved and available via the Asset Browser for use in the Factory Layout.

Limited experience in 3D modeling is not a factor when using the Autodesk Factory Design Suite. Dedicated commands make moving and orienting Factory Assets as easy as possible. Developing your Factory Layout becomes as easy as moving pieces to the best strategic location on a game board. The process enables you to try multiple 'what if' scenarios until the best solution is found.

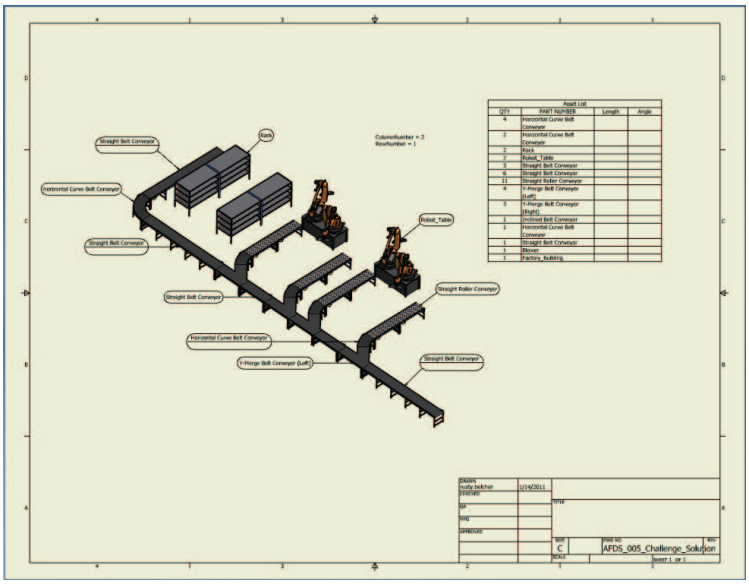

2D Layout Drawings are a necessary part of any proposal and Autodesk Inventor provides easy creation of Layout Drawings. Plan Views, Section Views, Detail Views, and Bill of Materials are all created quickly and easily. The drawing also maintains an associative relationship to the model, updating automatically when changes occur.

Digital Prototyping with Autodesk Factory Design Suite, combined with Autodesk's leadership in Building Information Modeling, uniquely positions Autodesk to deliver an integrated workflow that enables better productivity, predictability, and control throughout the life of the project. This integrated workflow is changing the way manufacturing and architectural companies think about their design practices and is helping companies build better products faster, with greater confidence and fewer costs. Autodesk is the only company that can offer these solutions in a way that is truly scalable, attainable, and cost effective for manufacturers, architects, engineers, and builders.

Navisworks

Validating your Factory Layout requires the comparison and analysis of multiple designs from various stakeholders. Your Layout must interface with the Architectural Facility and the Manufacturing designs supplied by the System Integrators or Factory Owners. Putting all this information into a single environment is often beyond the capabilities of most software programs.

Navisworks enables Factory Layout Designers to visualize large complex Layouts with thousands of components such as complete manufacturing facilities, factory floor layouts, production lines & industrial machinery, all in a single digital model by means of real time flythrough and walk through. Customers can combine together CAD data from various design systems regardless of file format or size, for complete Factory visualization and analysis.

Navisworks is compatible with all major native design and laser scan file formats. This means that 3D design data from various CAD systems can be combined together to create a single digital model.

The ability to navigate the entire digital model is extremely important for quality assurance and the design review process. Navisworks' unique display ability allows models of any size to be loaded and combined with other models to create designs beyond the capability of most CAD systems. Now there is no limit to the size and complexity of your Factory Layout.

Navisworks allows users to build complex environments from smaller models by appending, or uniting, multiple model files together. These smaller models can be loaded from any file type supported by Navisworks. Aggregation of 3D data from different CAD systems brings together design, manufacturing, and plant & supplier data into a single digital model. This allows all stakeholders to validate the design by visualizing it in 3D.

Navisworks is a unique technology for interactive visualization of any 3D design regardless of file type or size. The application offers users smooth, real-time, flythrough & Walkthrough capabilities. Designers can now navigate and explore even the largest and most complex models on standard computers. We can visualize complete 3D layouts of manufacturing plants and factories consisting of the products, tooling, fixtures, machines, and plant layouts.

The ability to walk through an extensive digital design is just the beginning of the Navisworks interactive experience. The Measuring tools enable detailed measurement of distance, area, and angles. User defined Cross Sections and section planes, enable close inspection of all details. Designers can simulate the real-life experience and appearance of manufacturing plants and factory layouts at any time in the installation process, so things go according to plan. Material handling equipment can also be simulated moving across the factory floor. It is easy to see how the Navisworks environment can quickly become your digital mockup.

Clash Detection

3D interferences are very common when you are bringing multiple models together for the first time. These interferences must be discovered as quickly as possible to assure a quality design and reduce construction problems. Navisworks enables the effective identification, inspection and reporting of interferences from the digital model with a versatile set of Clash Detection tools. The digital model of factory layouts, work cells and production lines can be inspected to detect potential issues such as equipment collisions and space restrictions. Navisworks also works with laser scanned point clouds. Large volumes of point clouds can be imported into the digital environment to compare the "as built" laser scan with the 3D model data.

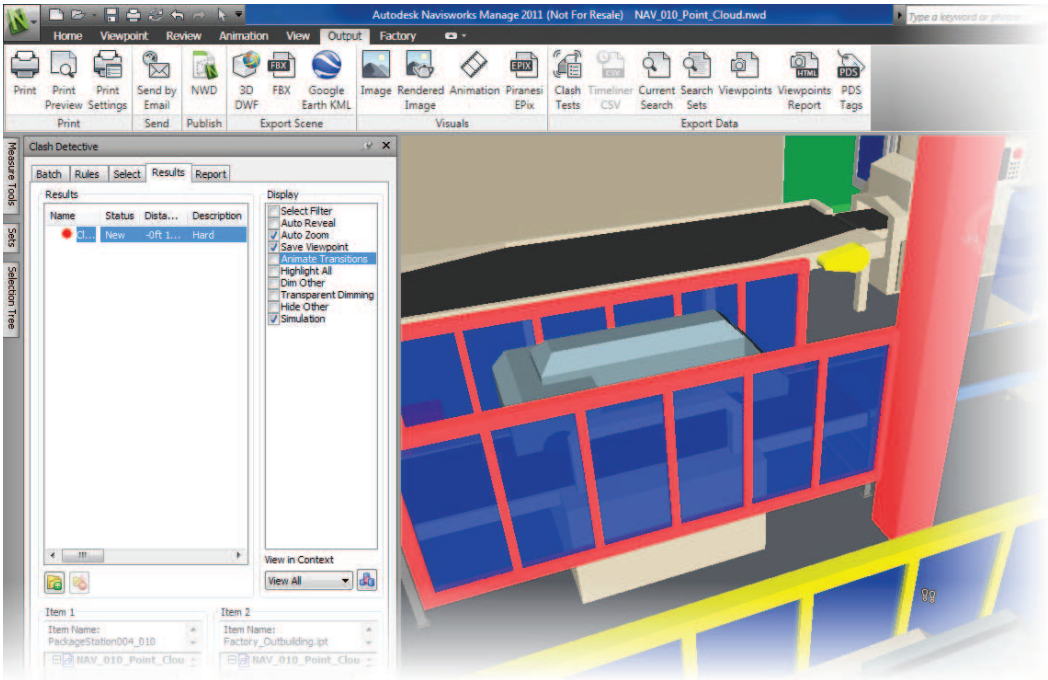

Large designs often require input from various sources. Communicating the design intent to these sources is a crucial factor in the design process. When design problems occur, stakeholders need a method to comment on the situation. Navisworks provides a set of Redline tools that allow designers to markup any pre-established Viewpoint with text, balloons, clouds, or geometry

Navisworks can publish the single digital model in high compressed, lightweight NDW and 3D DWF format for Free viewing giving all stakeholders access to the complete manufacturing plant or factory layout.

You can share your digital design with all the members of your design team. If members of your team don't have Navisworks, they can download Navisworks Freedom from Autodesk.com. Navisworks Freedom allows anyone to view the NWD files created by Navisworks. Navisworks Freedom can also view Autodesk 3D Design Review files or 3D DWF.

About this Course

This course is designed to cover the basic functions of the Autodesk Factory Design Suite. The Autodesk Factory Design Suite consists of the following four applications:

- AutoCAD Architecture
- Autodesk Inventor
- The Autodesk Factory Design Utilities
- Autodesk Navisworks.

The course does assume that the student has some basic knowledge of AutoCAD drawing practices, but a novice user should be able to complete the course with the help of a qualified instructor. The course in not intended to provide advanced and detailed instruction in any specific member application. For advanced training in AutoCAD Architecture, Autodesk Inventor, or Autodesk Navisworks, please contact your local Autodesk support representative.

Class Setup

The Training files used for this course are located in the following directory.

C:/Autodesk Learning / Autodesk Factory Design Suite /

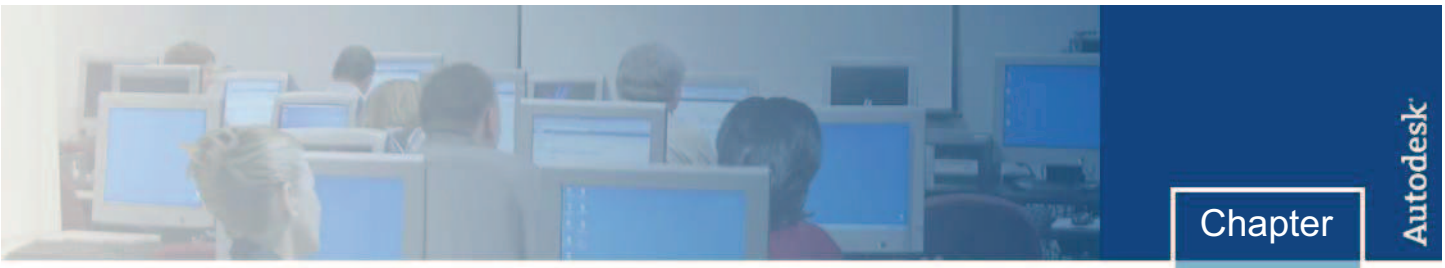

Chapter

2

AutoCAD Architecture Basics

In this chapter, you are introduced to basic concepts that will help you work effectively in the AutoCAD Architecture component of the Factory Design Suite. You also learn how to use the basic tools that make up the AutoCAD Architecture interface.

This course does not cover the advanced principles of AutoCAD Architecture. The primary goal is to familiarize you with the basic functions and practices of the applications. General familiarity with AutoCAD geometry creation is assumed, but a novice user should be able to complete all exercises with the aid of a qualified instructor. For advanced training on this application, please consult your Autodesk support representative.

Objectives

After completing this chapter, you will be able to:

- Navigate the AutoCAD Architecture User Interface.
- Understand the basic Concepts of AutoCAD Architecture.

Understanding the Concepts

What is AutoCAD Architecture 2010?

AutoCAD Architecture is a design and documentation system that supports the design, drawings, and schedules required for a building project.

In the AutoCAD Architecture model, every drawing sheet, 2D and 3D view, and schedule is a presentation of information from the same underlying building model. As you work in drawing and schedule views, AutoCAD Architecture collects information about the building project and coordinates this information across all other representations of the project.

Designing with Objects

AutoCAD Architecture is an object-based CAD application. When you design in the application, you draw from large collections of objects that represent real-world architectural components, such as wall, doors, windows, stairs and roofs.

AutoCAD Architecture objects contain information that allows them to function like the real-world components that they represent, to relate intelligently to one another, and to display in a 2-dimensional (2D) or 3-dimensional (3D) context.

Understanding AutoCAD Architecture Terms

Many of the terms used to identify objects in AutoCAD Architecture are common, industry-standard terms. However, some terms are unique to AutoCAD Architecture. Understanding the following terms will help you to work effectively in the software.

Project: In AutoCAD Architecture, the project is the single database of information for your design. The project folder contains all information for the building design, from geometry to construction data. This information includes components used to design the model, views of the project, and drawings of the design. By using a single project folder, AutoCAD Architecture makes it easy for you to alter the design and have changes reflected in all associated areas (such as plan views, elevation views, section views, and schedules). Having one folder to track also makes it easier to manage the project.

Level: Levels are infinite horizontal planes that act as a reference for Level-hosted elements, such as roofs, floors, and ceilings. Most often, you use levels to define a vertical height or story within a building. You create a level for each known story or other needed reference of the building; for example, first floor, top of wall, or bottom of foundation. To place levels, you must be in a section or elevation view.

Divisions: Divisions segment the building in the horizontal plane. A division might be a wing of a building. By default, each new project in AutoCAD Architecture has one division.

Constructs: Constructs are the main building blocks (or base drawing files) of the building model. A construct represents one unique portion of a building, such as a building core, an apartment, or an entire floor. You assign a construct to a level and a division within the project.

Elements: An element is a generic building block for multiple uses. For example, you can create an element for a typical bathroom layout and reference it multiple times into one or more constructs.

Views: After the structure of the building project is defined and constructs are assigned to levels and divisions, you can start to create view drawings. A view drawing references a number of constructs to present a specific view of the building project.

To create a view drawing, you first decide which portion of the building you wish to look at and which type of view to generate. View drawings automatically reference the appropriate constructs according to their level/division assignments within the building.

Sheets: Sheets are the final output of a building design. Sheets are used to plot view drawings of your building project. After you create the necessary model views, detail views, and section/elevation views, you then drag the views onto the sheets to create sheet views. Sheets are collected together to create a sheet set.

Working in the Product

AutoCAD Architecture is a powerful CAD product for the Microsoft® Windows operating system. Its interface resembles those of other products for Windows, featuring a ribbon that contains the tools you use to complete tasks.

The AutoCAD Architecture interface is designed to simplify your workflow. With a few clicks, you can change the interface to support the way that you work. For example, you can set the ribbon to one of the three display settings for optimum use of the interface. You can also display several project views at one time, or layer the views so you see only the one on top.

Read the following topics to familiarize yourself with the basic parts of the AutoCAD Architecture product. Then experiment with hiding, showing, and rearranging interface components to support the way you work.

Ribbon Overview

The ribbon displays automatically at the top of the work area when you create or open a file. It provides a palette of all available tools. The ribbon is made up of tabs, and each tab is divided into panels.

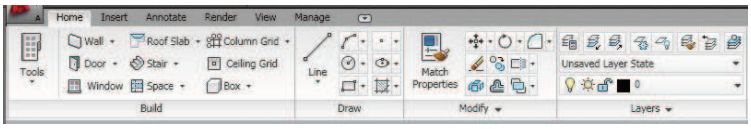

You can customize the ribbon by changing the order of the panels, or moving a panel off the ribbon to the drawing area or your desktop. You can minimize the ribbon for maximum use of the drawing area.

To move panels

1. Select a panel label and drag the panel to a new location on the ribbon.
2. Select a panel label and drag the panel off the ribbon.
3. To return the panel to the ribbon, on the border of the floating panel, click (Return Panels to Ribbon).

To minimize the ribbon

1. Click (Minimize) to the right of the ribbon tabs.
2. The minimize behavior cycles through the following minimize options:

- **Show Full Ribbon:** Shows entire ribbon.
- **Minimize to Panel Titles:** Shows tab and panel labels only.
- **Minimize to Tabs:** Shows tab labels only.

Ribbon Tabs and Panels

TIP: When you see a button that shows a line dividing it into two sides, you can click the top (or left) side to access the tool you probably use most often. Click the other side to display a list of related tools.

Example of button that can be clicked on two sides

The following table describes the ribbon tabs and the types of commands they contain:

Ribbon Tab	Includes commands for
Home	Many of the tools you need to create the building model.
Insert	Tools to add and manage secondary items such as raster images, and CAD files.
Annotate	Tools used for adding 2D information to a design.
View	Tools used for managing and modifying the current view, and for switching views.
Manage	project and system parameters and set- tings.

Extended Panels

A drop-down arrow next to a panel name ( ) indicates that you can expand the panel to display additional tools and controls. By default, an expanded panel closes automatically when you click another panel. To keep a panel expanded, click the push pin ( ) in the bottom left corner of the expanded panel. A dialog-launcher arrow near the bottom right of a panel ( ) opens a dialog.

Contextual Ribbon Tabs

When you execute certain commands or select an object, a special contextual ribbon tab displays, that contains a set of tools that relate only to the context in which you are working.

For example, when you select a door/window assembly, the Door/Window Assembly contextual tab displays commands that are commonly used when working with door/window assemblies.

The Application Menu

Click the application button ( ) to display the application menu. The application menu provides access to many common file-related commands and also allows you to manage your files using advanced commands such as Export and Publish.

You can perform the following actions on the application menu:

On the application menu click...	to...
New	select a template and create a new drawing.
Open	select a file to open.
Save	save the current file.
Save As	save the current drawing with a new name.
Export	export the current drawing.
Print	print the current drawing.
Publish	publish the current project.
Send	transmit the current drawing.
Utilities	access tools to maintain the current drawing.
Close	close the current drawing.
Options	set various AutoCAD Architecture options.

Using the Quick Access Toolbar

The Quick Access toolbar is located on the AutoCAD Architecture title bar and contains the following items by default:

Quick Access Toolbar Item	Description
New	creates a new drawing.
Open	opens a file.
Save	saves the current drawing.
Undo	cancels the last action. Displays list of all actions taken during the session.
Redo	reverses the effects of the previous Undo command.
Print	prints a drawing.
Project Browser	opens the Project Browser.
Project Navigator	opens the Project Navigator.

To undo or redo a series of operations, click the drop-down to the right of the Undo and Redo buttons. This displays the command history in a list. Starting with the most recent command, you can select any number of previous commands to include in the Undo or Redo operation.

The Quick Access toolbar can display below the ribbon. Click at the right side of the Quick Access toolbar, and then click **Show Below** the Ribbon to change the display setting.

You can add an item to the Quick Access toolbar from the drop-down by clicking **More Commands** and dragging the command from the Command List pane to the Quick Access toolbar.

Project Browser

Use the Project Browser to create, copy, and switch between projects. On the left side of the Project Browser, you can create new projects, browse existing projects, and select the current project. On the right side of the Project Browser, an embedded Internet Explorer allows you to browse your project home page.

To open the Project Browser, on the Quick Access toolbar, click  (Project Browser).

To change the current project, double-click the name of a project in the left pane.

Project Navigator

After you select a project in the Project Browser, you use the Project Navigator to create, edit, and manage the drawing and construction documentation files within the project. Use the Project Navigator to create and open elements, constructs, views, and sheets for the current project.

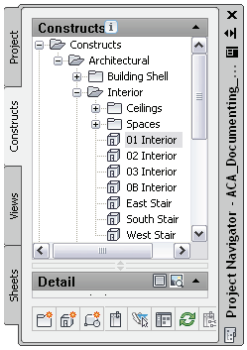

The Project Navigator has 4 tabs that correspond to the main phases of project creation:

- The *Project* tab contains the project information, including the levels and divisions in the building model.
- The *Constructs* tab manages the construct and element drawings that make up the building model.
- The *Views* tab manages the drawings that contain views of the building model.
- The *Sheets* tab organizes all the plotting sheets (created from referenced views) into a single project sheet set.

To open the Project Navigator, in the Quick Access toolbar, click  (Project Navigator).

Tools and Tool Palettes

AutoCAD Architecture includes a large inventory of tools organized into tool palettes. Tools represent the individual objects you can add to a drawing. For example, there are numerous tool palettes containing tools for design, such as tools for working with walls, windows, and doors. There are also tool palettes containing documentation tools, such as those for annotation and callouts.

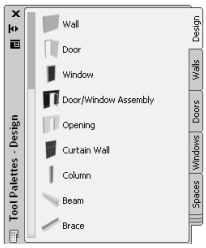

To open the current tool palette, click *Home* tab > Build panel > Tools drop-down > **Design Tools**.

To switch the active tool palette group, right-click the title bar of the currently active tool palette group. On the context menu, select the tool palette group that you want to display.

Controlling the Appearance of Palettes

Palettes, such as a tool palette or the Properties palettes, remain open as you work in AutoCAD Architecture. You can control the behavior of a palette by using techniques to hide, dock, or pin it.

You can hide a palette so that it becomes hidden when you move the cursor away from it, leaving only the title bar visible. To automatically hide a palette, in the title bar of the palette, click (Auto-hide). To temporarily redisplay a hidden palette, move the cursor over the title bar.

To disable auto-hide, *click* (Auto-hide) again.

You can position palettes in the application window to make the best use of your work area. A palette can be docked on the left or right side of your workspace, or it can float (undocked).

To dock a palette, right-click the title bar of the palette, and select **Allow docking**. Position the cursor over the title bar, and drag the palette to the left or right side of the workspace. To undock a palette, drag the palette from the edge of the workspace.

Properties Palette

The Properties palette provides a central location to view the properties of a selected object. Use the Properties palette to view and change settings for the style, dimensions, location, property set data, and other characteristics of an object.

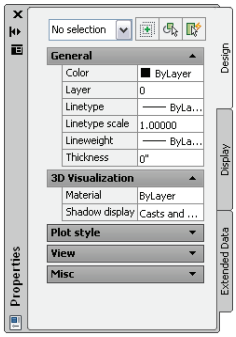

If the Properties palette is not displayed when you select an object, you can display it by clicking *Home* tab > Build panel > Tools drop-down > **Properties**.

Drawing Window Status Bar

The drawing window status bar is located at the bottom of the drawing window. It contains the following information about the current project and drawing:

- Name of the current project.
- Type (construct, element, view, or sheet) and name of the current drawing.
- Active scale for the current drawing or viewport.
- Display configuration of the current viewport or model space view.
- Cut plane height.

Options at the far right of the drawing window status bar provide access to the following functions: Surface Hatch Toggle, Layer Key Overrides, Isolate Objects, AEC Project Standards, Autodesk Trusted DWG, and Manage Xrefs.

Command Line Window

The command line window is located under the drawing window status bar. You can use it to enter a command by typing the command name. Some commands have abbreviated names. For example, instead of entering line to start the LINE command, you can enter l. To find a command, you can type a letter in the command window, and press TAB to cycle through all the commands that begin with that letter. To repeat a command, press the Up arrow to scroll through recent commands.

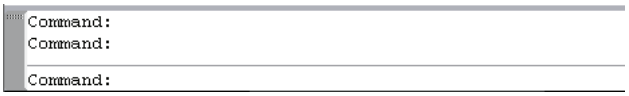

Application Status Bar

The application status bar is located under the command line window. It contains the following information and tools when you drawing is open:

- Coordinate values
- Drawing tools
- Quick properties
- View tools
- Navigation tools
- Annotation tools
- Workspace
- Lock
- Elevation
- Clear screen

Style Manager

The Style Manager provides a central location where you can view and work with styles.

A style is a set of parameters that determines the appearance or function of an object in AutoCAD Architecture. For example, a door style determines the type of door represented in a drawing, such as single, double, bi-fold, or hinged. The door style also determines the shape of the door, such as rectangular or arched, as well as default frame dimensions, standard sizes, and display properties. You assign the same style to all instances of an object that have the same characteristics. For example, you could assign one door style to all the office doors in a building and another door style to all fire doors in the building.

To access the Style Manager, click Manage tab > Style & Display panel > Style Manager.

Content Browser

The Content Browser is a library of tool catalogs that contain tools, tool palettes, and tool packages. You can locate tools in the content browser either by searching or by navigating through the tool catalogs.

You will use the Content Browser in several lessons in the tutorials to obtain tools that you use to perform specific tasks.

To access the Content Browser, click Insert tab ➢ Content Panel ➢ Content Browser.

Chapter Summary

This chapter introduced the basic concepts that help you work effectively with the AutoCAD Architecture component of the Factory Design Suite. You also learn how to use and navigate the AutoCAD Architecture user interface.

Having completed this chapter, you can:

- Navigate the AutoCAD Architecture User Interface.
- Understand the basic Concepts of AutoCAD Architecture.

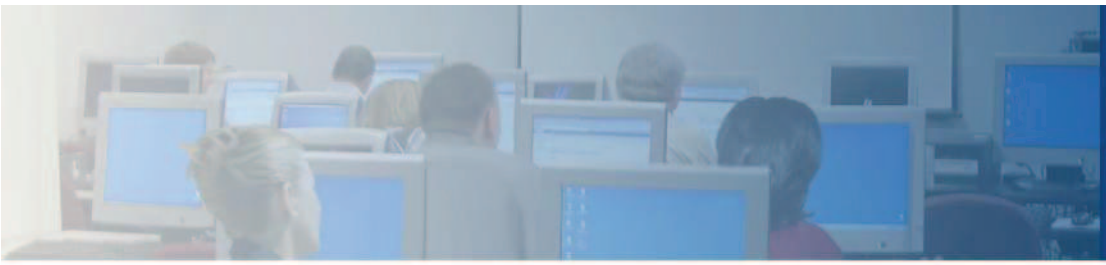

Chapter

3

Creating the Shell

AutoCAD Architecture allows designers to easily create a factory facility with simple, easy to use commands. Special architectural commands are dedicated to creating Walls, Doors, and Slabs. These elements can be created from scratch or applied to existing linework. This chapter will focus on the process of creating the outer shell of the factory facility using architectural specific commands.

Objectives

After completing this chapter, you will be able to:

- Create the shell walls from linework in a drawing.
- Use two different techniques to create the structural grid.
- Add curtain walls and an entrance to the shell.
- Add a Slab to the design.

Lesson: Converting Linework to Shell Walls

In this lesson you will create the exterior building shell by converting 2D linework in an AutoCAD drawing (DWG) to walls.

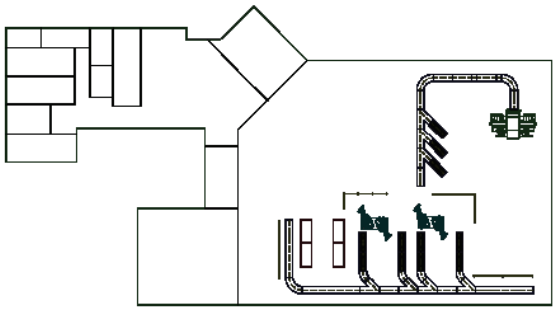

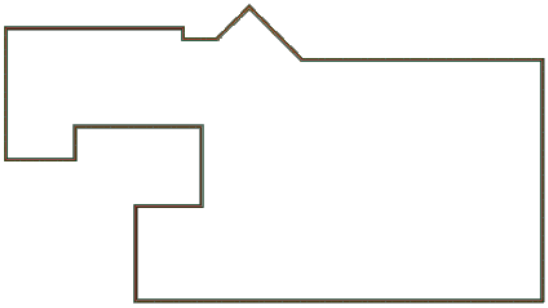

After you create the walls, you adjust their position, materials, and height to match the building design requirements.

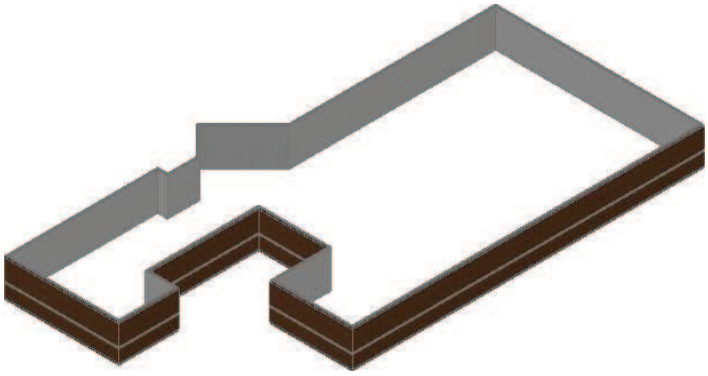

Objectives

After completing this lesson, you will be able to:

- Create the shell walls from linework in a drawing.
- Use two different techniques to create the structural grid.
- Add curtain walls and an entrance to the shell.
- Add a Slab to the design.

Exercise: Converting Linework to Shell Walls

In this exercise you create, the exterior building shell by converting 2D linework in an AutoCAD drawing (DWG) to walls.

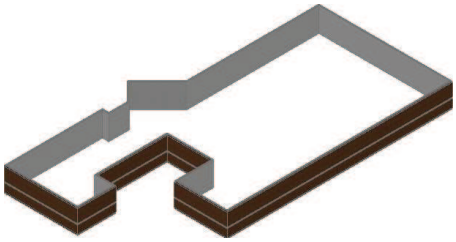

The completed exercise

1. Open **ACA_001_Linework.dwg**.

2. Convert the exterior linework to walls
   - Turn off the visibility of the Conveyor layer.
   - On the Design tab of the Design tool palette, right-click the **Wall** tool and click Apply Tool Properties to Linework.

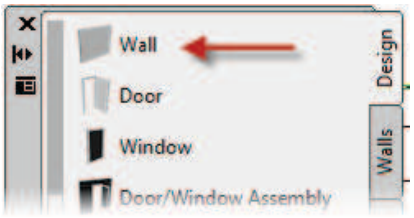

   - Select the green polyline, which represents the exterior face of the shell wall that you want to create.

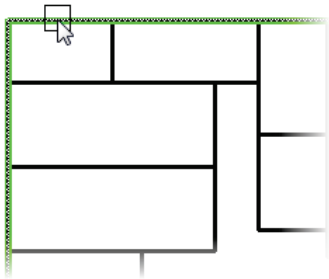

   - Press ENTER twice to retain linework in the drawing so that you can check the position of the walls that you create.

3. With the walls selected, zoom in to the top left corner of the floor plan.

   - The linework displays in the center of the walls. Because the linework represents the interior face of the walls, you need to reposition the walls so their exterior faces align with the linework. Walls have a Justification property that lets you control their positioning.

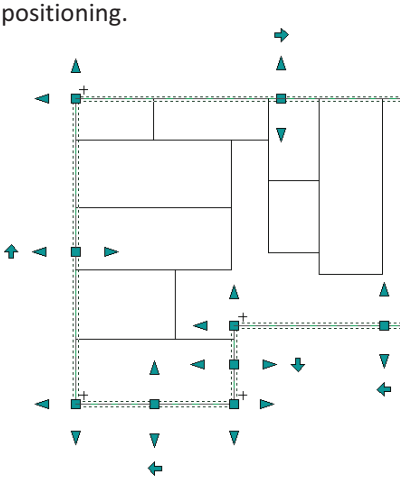

4. Change the Wall Justification
   - On the Properties palette, under Dimensions, for Justify, select **Right** and press ESC.
   - Zoom to the drawing extents.

   The walls are now right justified and the linework, although still in the drawing, is no longer visible because the interior wall faces align with it.

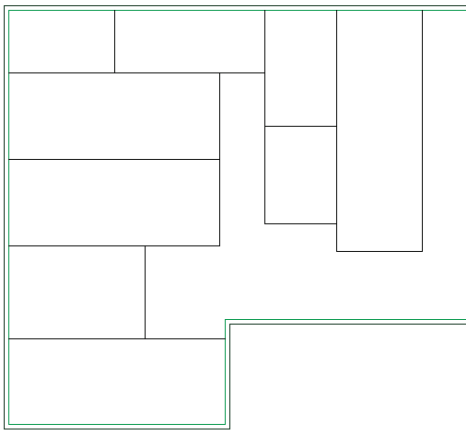

5. Turn off the visibility of the linework.
   - The original linework will be preserved for later use in the Factory Layout process. Turn off the visibility of the Walls-Exterior Layer and the Walls Interior Layer.

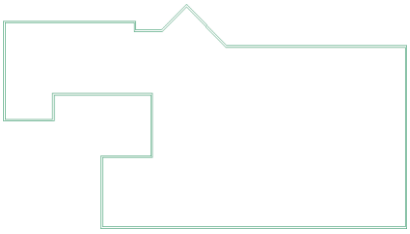

6. Change the wall style to match the design requirements.
   - Using the Select Similar command or a window selection, select the shell walls
   - On the Properties palette, under General, for Style, select **Stud-5.5 Brick-LOWER FLOOR**.
   - Press ESC.
   - Zoom to the triangulated walls at the top of the drawing.

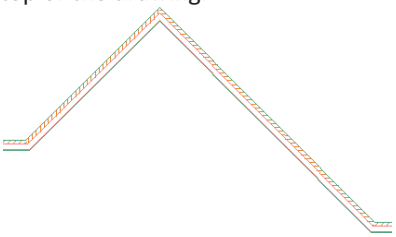

   - The wall displays the multiple layers of material specified in the new style. However, to ensure that the shell walls reach the roof, you need to change the wall height.

7. Adjust the wall height.
   - Select all the walls in the drawing
   - On the Properties palette, under Dimensions, for Base height, enter **15'**.
   - Press ESC.

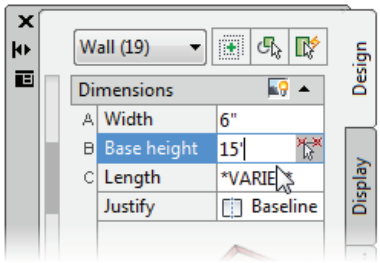

8. View the walls in 3D.
   - Select View panel ➤ View drop-down ➤ **View, SW Isometric**.
   - Select Visual Styles drop-down ➤ **Visual Styles, Realistic**.

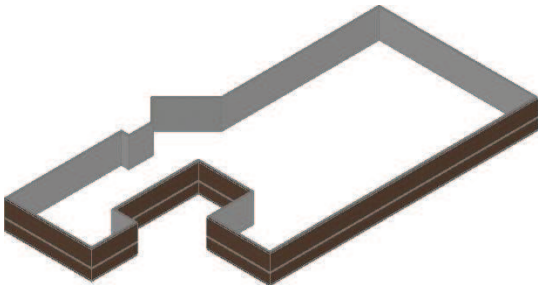

9. Close the Drawing without saving.

Lesson: Creating a Layout Grid

The Column Grid command can be used to easily create a structural grid for the factory building. The command creates a regularly-spaced rectangular grid by default. Once the grid is inserted into the design, it can be resized to suit any factory layout. After the grid is modified, the Column Bubble command is used to easily annotate the grid lines.

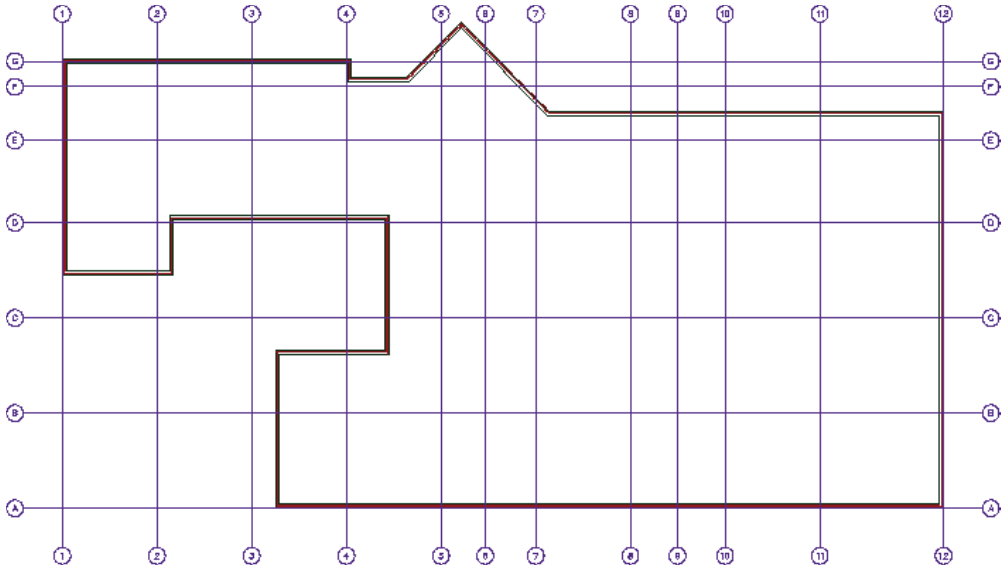

Objectives

After completing this lesson, you will be able to:

- Create a default building grid for the factory layout.
- Modify the column grid to suit existing building lines.
- Label the building grid with bubbles.

Exercise: Creating a Layout Grid

In this exercise, you create a structural grid for the Factory Building. You create the grid as a regularly-spaced rectangular grid, and then grip-edit it to create the irregular shape that the building requires. When you complete the grid, you use automatic labeling to place bubbles on the ends of the grid lines.

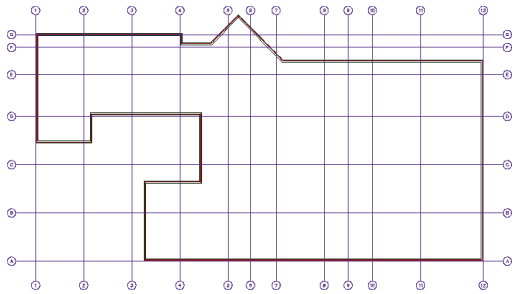

The completed exercise

1. Open **ACA_002_Gridwork.dwg**.

2. Create a Structural Grid.
   - In the *Design* tab of the tool palette, click the **Column Grid** tool.

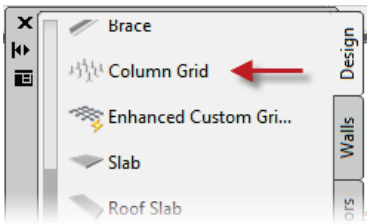

3. Place the grid.
   - If necessary, on the application status bar, click Ortho Mode to turn it off.
   - Click **Object Snap** to turn it on.
   - Right-click Object Snap and select **Intersection**.
   - Move the cursor to the middle of the tick mark in the lower left corner of the drawing, and when the **Intersection** Snap displays, select it.

     The tick mark is located at the endpoint extension of the lower wall and the leftmost wall, and exists to aid you in placement of the grid.

   - Press Enter twice.

     A grid displays, but it is too small. You can adjust the overall size of the grid, as well as the individual bays by changing the grid properties.

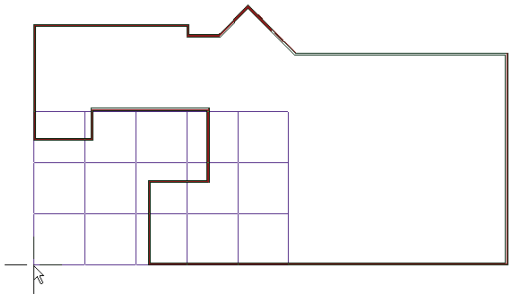

4. Resize the grid.
   - Select the grid.
   - On the Properties palette, under Dimensions:
     - For X-Width, enter **185**'.
     - For Y-Depth, enter **95**'.
   - Press ESC.

     The grid is still not the correct size for the building. Because the bays/grids are set to regular spacing, the exact dimensions of 185' x 95' cannot be created.

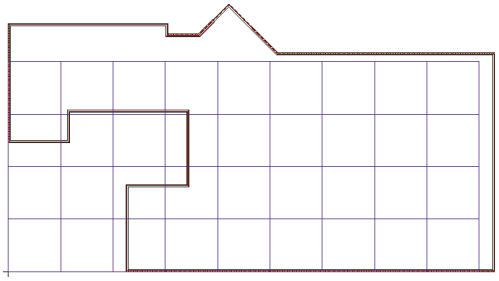

5. Convert both X and Y directions of the grid to manual placement in order to edit the grid
   - Select the grid, right-click and select **X Axis ➢ Layout Mode**.
   - Press Enter.

     After the layout mode is selected, you can make selections on the command line. By default, manual is the selection made on the command line. After you convert to manual, grips display on each grid line endpoint.

   - Select the grid, right-click and select **Y Axis ➢ Layout Mode**.
   - Press Enter

     Now you can edit the grid lines like linework.

6. Grip edit the grid.
   - Select the grid to display grips.

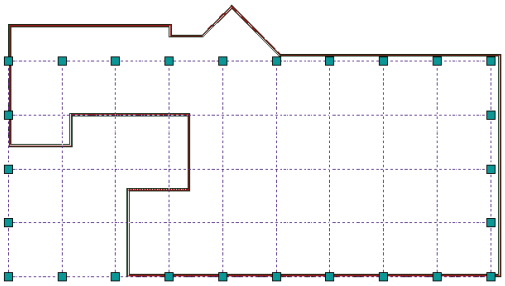

   - Select the top left grid grip, and drag it to the top endpoint of the left vertical wall.

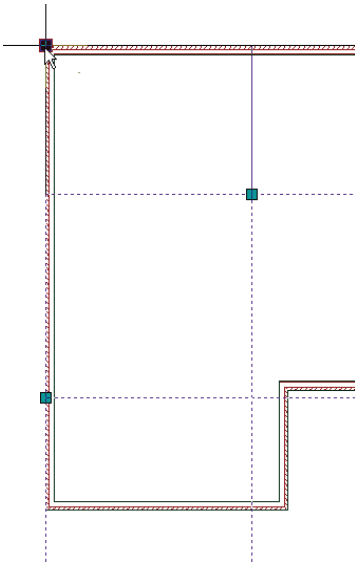

   - Select the top right grid grip, drag it over to align with the right vertical shell wall, and press ESC.

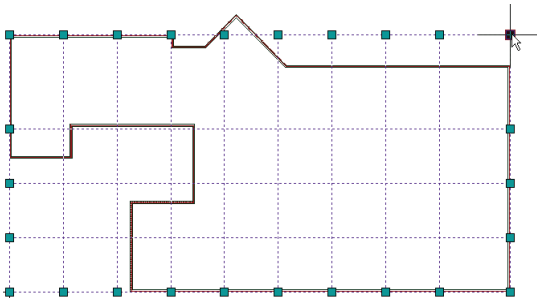

7. Manually add a horizontal grid line to the top of the grid.
   - On the application status bar, click **Object Snap** to turn it off.
   - Select the grid, right-click and select **Y axis ➢ Add Grid Line**.
   - Specify a point on the grid as shown. Exact placement of the grid line is not necessary, as you adjust the line in subsequent steps.

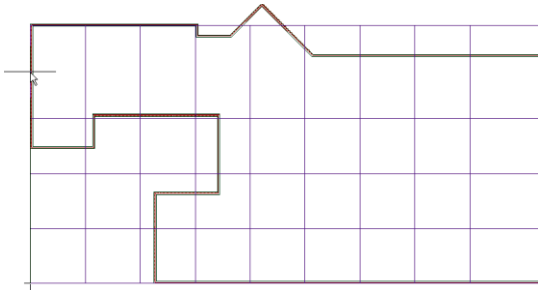

8. Automatically label grid lines with a preloaded grid bubble block.
   - Select the grid, right-click and select **Label**.

     The X and Y axis both have tabs to control how you can label both the horizontal and vertical grids.

9. In the Column Grid Labeling dialog:
   - In the *Y – Labeling* tab, under Labels, click in the Number field in the first line, enter **A**, and press ENTER.

     The rest of the grid lines in the dialog box are assigned letters

   - Under Bubble Parameters, select **Left** and clear Right.
   - Under Extension, enter **10'**.
   - Click the *X – Labeling* tab.
   - On the *X – Labeling* tab, under Labels in the X - Direction, click in the Number field in the first line, enter **1**, and press ENTER.
   - Under Bubble Parameters, select **Top** and clear Bottom.
   - Under Extension, enter **10'**.
   - Click **OK**.

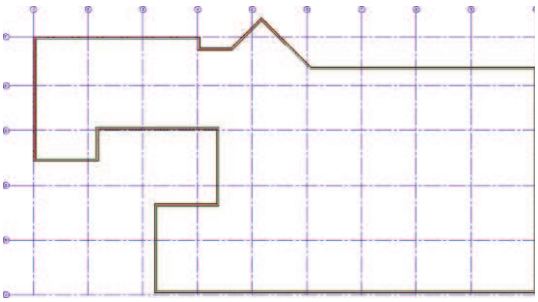

10. Close the drawing without saving.

Lesson: Creating a Layout from Linework

It is a common practice to develop architectural elements from simple AutoCAD geometry. A custom building grid can be easily created from primitive linework. In this exercise, you use linework in a common sketch to create a complex building grid. The grid is used to create the 3D columns that support the roof.

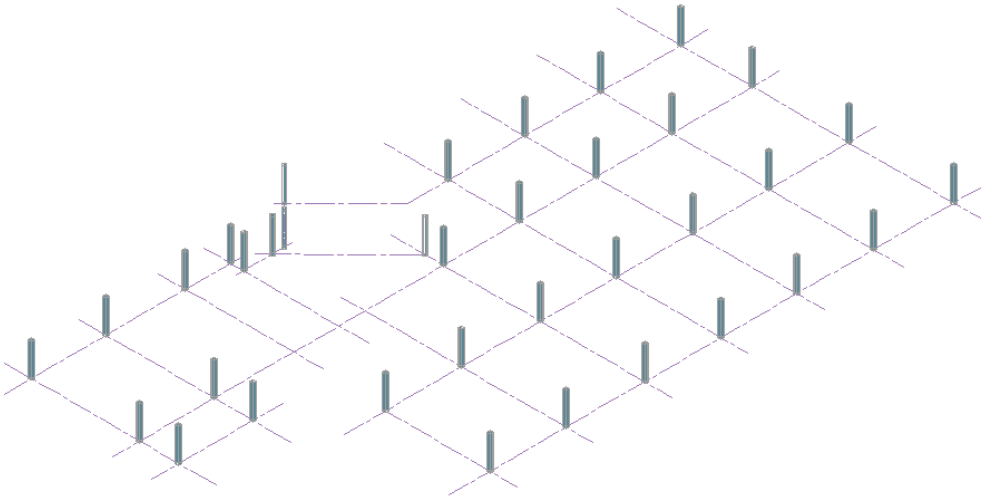

Objectives

After completing this lesson, you will be able to:

- Convert common AutoCAD lines into a custom building grid.
- Place columns on a building grid.
- Label a building grid.

Exercise: Creating a Layout from Linework

In this exercise, you use linework in a sketch to create a more complex building grid than the grid that you created in the previous exercise. After you create the grid, you attach columns to the grid nodes. When the grid is complete, you manually label the grid lines.

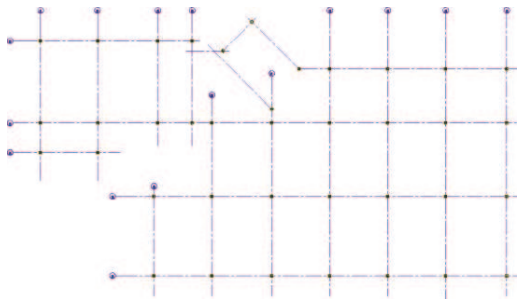

The completed exercise

1. Open **ACA_003_Gridwork_Custom.dwg**.
   - Zoom to the drawing extents.

2. Convert linework to a grid.
   - On the *Design* tab of the Design tool palette, right-click the **Column Grid** tool and click Apply Tool Properties to Linework.

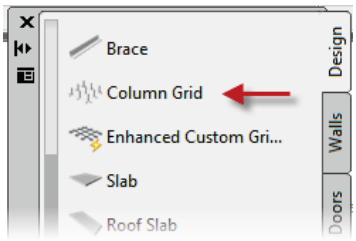

   - Using a selection window, select the drawing linework, and press ENTER.
   - Sub Step 3.
   - In the Command line, enter **y**, and press ENTER.
   - Press ESC.

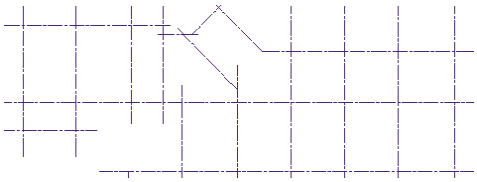

3. Create a Column on each node of the grid.
   - On the *Design* tab of the Design tool palette, click the **Column** tool.

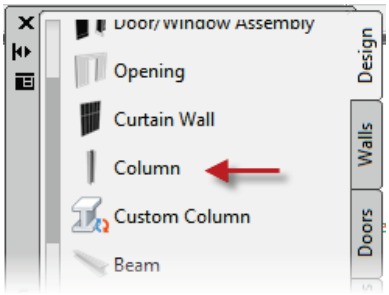

   - Move the cursor over any one of the grid intersections until a column and a tooltip display.
     Note: Do Not Click.
   - Press CTRL once to access the Add columns to all nodes option. A red circle displays wherever a column will be placed.

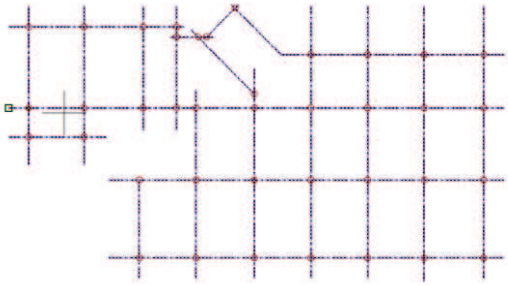

   - Click to place the columns.
   - Press Enter.

     Columns display at each node, however, some grid nodes do not require columns. For example, some columns block the entrance of the building.

- Select the highlighted columns and press DELETE.

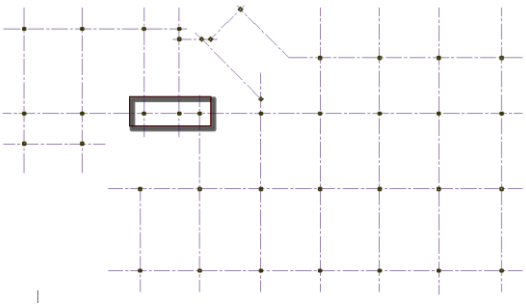

4. View the columns in 3D
   - Click *View* panel ➢ View drop-down ➢ **View, SW Isometric**.

     Because the columns use the Standard style, a generic column displays at each grid intersection.

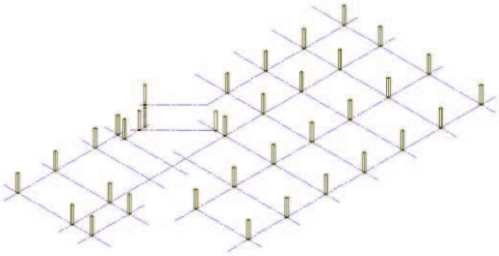

5. Change the style of the columns using the Content Browser.
   - Click *Home* tab ➢ Build panel ➢ Tools drop-down ➢ **Content Browser**.

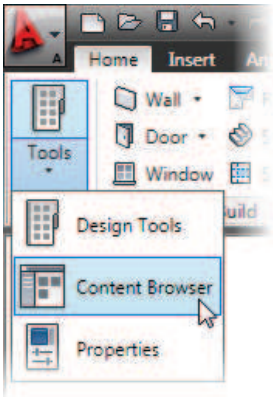

   - In the right pane of the Content Browser, click the Design Tool Catalog - **Imperial**.
   - In the left pane, click **Structural** ➢ **Members**.
   - In the right pane, click **Next** until you locate the Column Cover 12 x 12 tool.
   - On the lower-right corner of the Column Cover 12 x 12 icon click the i-drop symbol  .
   - Drag the tool onto the tool palette, and when the dropper fills, release the mouse button.
   - Close the Content Browser.

   - Select one of the Columns. In the Context Ribbon, click 

(Select Similar).

     All columns are selected.

   - On the *Design* tab of the Tool palette, right-click **Column Cover** 12 x 12, and click Apply Tool Properties to ➢ **Column**.
   - Press ESC.

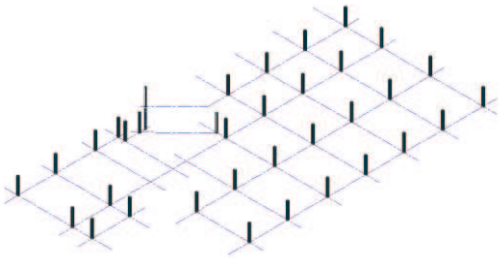

6. Use the grid bubble tool to label each line individually.
   - Click View panel ➢ View drop-down ➢ **View, Top**.
   - Right-click the Tool palette title bar, and select **Document**.
   - On the *Annotation* tab of the Document tool palette, click the **Column Bubble** tool.

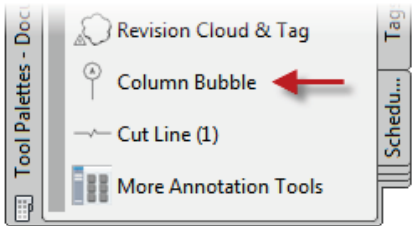

   - Select the left endpoint of the top horizontal grid line.
   - In the Create Grid Bubble dialog:
     - For the Label, enter **A**.
     - Clear Apply at both ends of gridline.
     - Click OK.

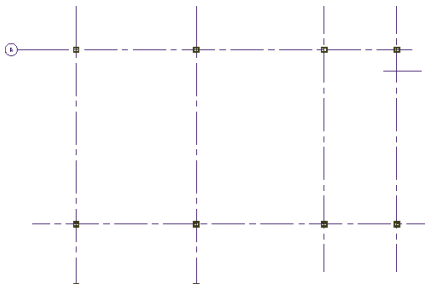

7. View the columns in 3D.
    - Select the left endpoint of the grid line below the one that you just labeled.
    - In the Create Grid Bubble dialog:
        - For Label, verify that **B** displays.
        - Clear **Apply** at both ends of gridline.
        - Click Ok.
    - Continue to select grid line endpoints to label the remaining lines as shown.

    Use a letter sequence on the horizontal lines and a numeric sequence on the vertical lines.

    - When you are finished, press ENTER.

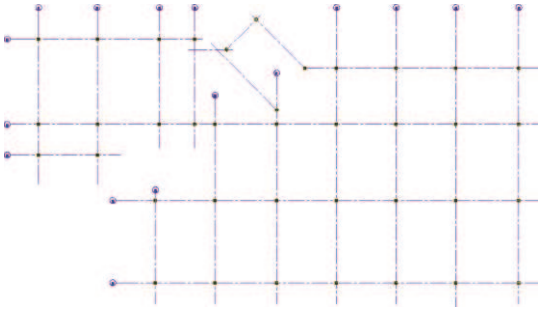

8. Close the drawing without saving.

Lesson: Creating a Curtain Wall

Curtain Walls are often part of a factory building design. As with all other architectural elements, curtain walls are easily created using dedicated commands. Curtain walls can be created from scratch or applied to existing walls or AutoCAD linework. This section will demonstrate the process of converting existing walls to architectural curtain wall elements.

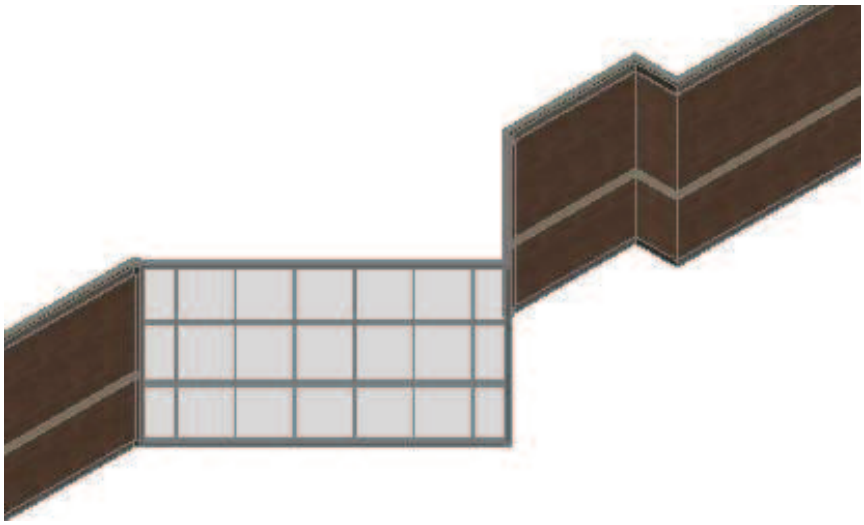

Objectives

After completing this lesson, you will be able to:

- Convert Existing Walls to Curtain Walls.
- Trim Curtain Walls.
- Modify Curtain Wall Styles.

Exercise: Creating a Curtain Wall

In this exercise, you convert some of the walls that you created in a previous exercise to curtain walls.

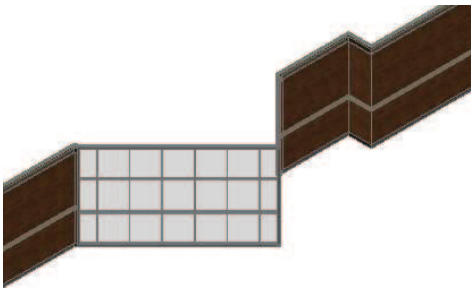

The completed exercise

1. Open **ACAD_004_Curtain_Wall.dwg**.

2. Convert Walls to Curtain Walls.
   - On the *Design* tab of the Design tool palette, right-click the **Curtain Wall** tool and click Apply Tool Properties to **Walls**.

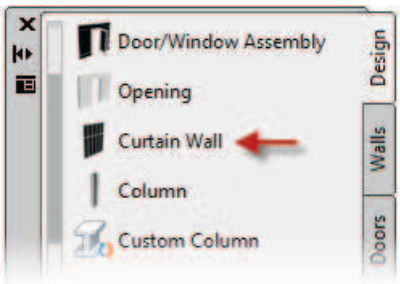

   - Select the walls in the bumpout on the north side of the building and in the corners of the left wing of the building as shown.

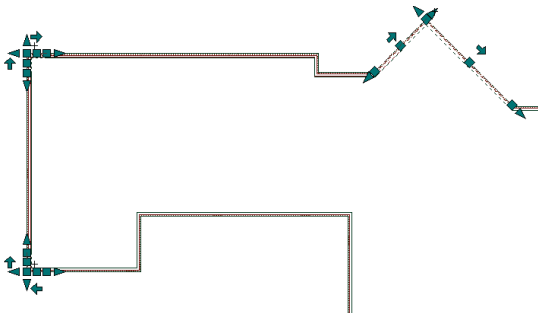

   - Press ENTER.
   - On the Command line:
     Enter **c** and press ENTER.

     This option enables you to use the center of the wall to justify the curtain walls.
   - Enter **y** and press ENTER.

     Use this option to erase the layout geometry (the walls used in the conversion).
   - Press ESC, and zoom to the bumpout to view the curtain walls.

     The curtain walls may overlap or display with a gap at the corner. Trimming and Extending is often necessary when you convert linework or walls to curtain walls, or other objects.

3. Stretch the curtain walls.
   - Extend the curtain walls, using the grips, until the walls overlay as shown.

4. Trim the right curtain wall.
   - Click *Home* tab ➢ Modify panel ➢ AEC Trim drop-down ➢ **Trim**.
   - Select the left curtain wall segment, and press ENTER.
   - Select the top portion of the right curtain wall segment.
   - Press ENTER.
   - The right segment is trimmed to the left segment.

5. Trim the left curtain wall.
   - Click *Home* tab ➢ Modify panel ➢ **Trim**.
   - Select the right curtain wall segment, and press ENTER.
   - Select the top portion of the left curtain wall segment, and press ENTER

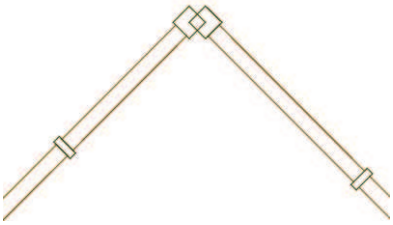

6. Modify the curtain wall style to match design requirements.
   - Select the left curtain wall segment, right-click, and click **Edit Curtain Wall Style**.
   - Modify the Orientation to **Horizontal**, shown by marker (1) in the following image.
   - Modify the division type to **Fixed Number of Cells**, shown by marker (2) in the following image.
   - Modify the Number of cells to **5**, shown by marker (3) in the following image.

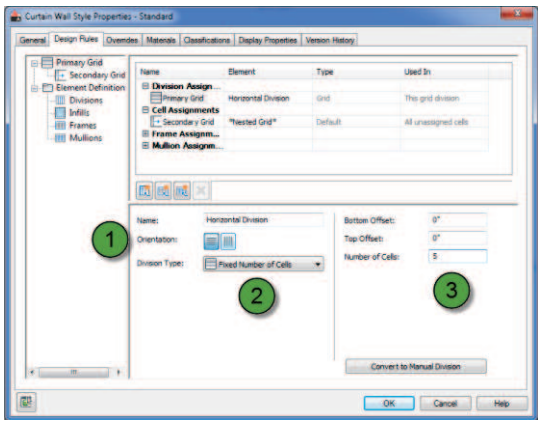

   - Click OK.

7. View the changes to the curtain wall in 3D.
   - Click View panel ➢ View drop-down ➢ **View, NE Isometric**.
   - Click Visual Styles drop-down ➢ **Visual Styles, Realistic**.

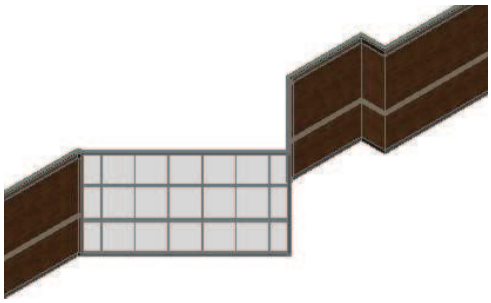

8. **Optional:** Use same techniques to change the two corner conditions on the curtain walls in the left wing of the building.

9. Close the drawing without saving.

Lesson: Creating an Entrance

Interior and exterior entrances are a fundamental architectural element of any factory design. Doors and door/window assemblies can be placed anywhere along existing walls. The door/window assemblies command creates an access door nested in a window assembly. Supporting styles for doors and door/windows assemblies allow designers to create any size and mullion combination desired for simple or complex access situations.

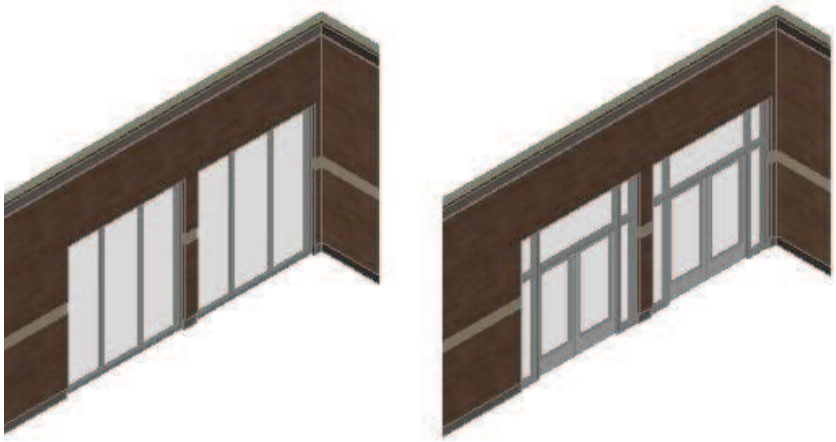

Objectives

After completing this lesson, you will be able to:

- Place Door/Window assemblies in existing walls.

Exercise: Creating an Entrance

In this exercise, you create an entrance by adding two door and window assemblies to the building shell.

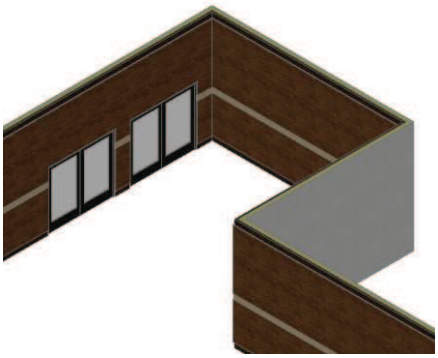

The completed exercise

1. Open **ACA_005_Creating_Entrance.dwg**.

2. Place two door/window assemblies.
   - Zoom in to the highlighted area of the drawing shown in the following image.

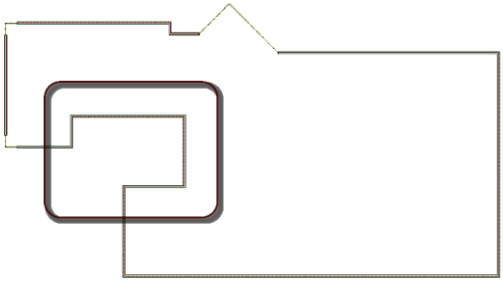

   - On the Home Ribbon, select **Content Browser** on the Build Panel.

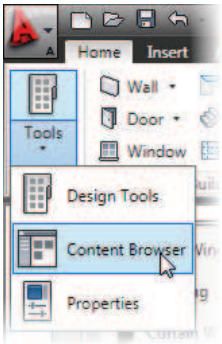

   - On the right panel, click (Design Tool Catalog – Imperial).

   - On the left panel, click **Doors and Windows**, and then on the right panel, click Door and Window Assemblies as shown in the following image.

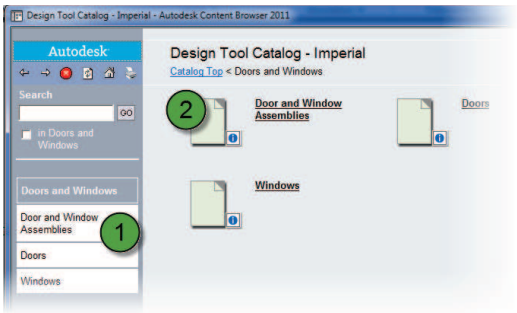

   - Left Click and drag the **Hinged Double 4 Inch Head** Door and Window Assembly from the right panel into the drawing.

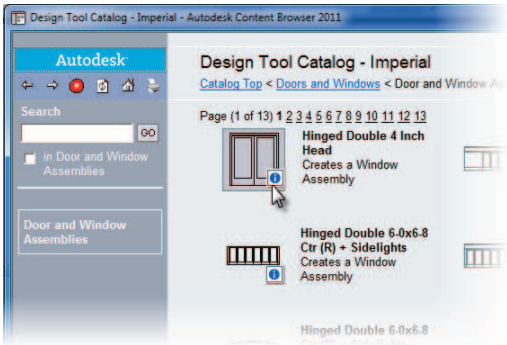

3. Place the door/window assembly.
   - Select the wall shown in the following image

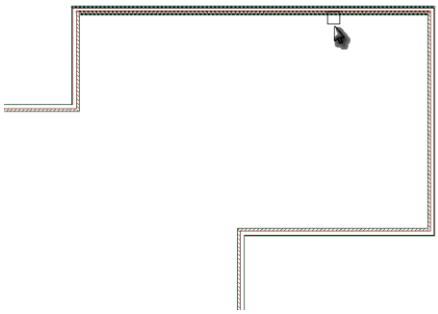

- Set the Door Dimension Width to **9'-0"** in the Properties pallete.

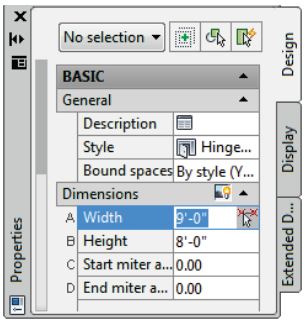

- Place the Door 2' from the right hand wall as shown in the following image. Enter **2'** in the right hand input box and hit ENTER.

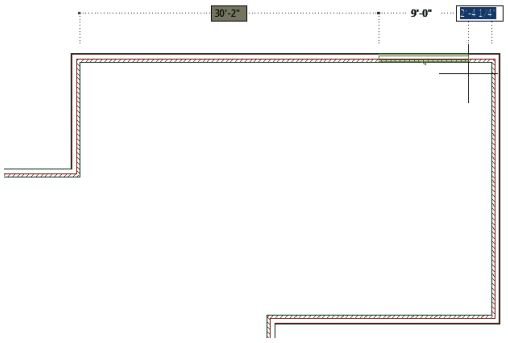

- Place a second Entrance Door **13'** from the right hand wall as shown in the following image. Enter **13'** in the right hand input box and hit ENTER.

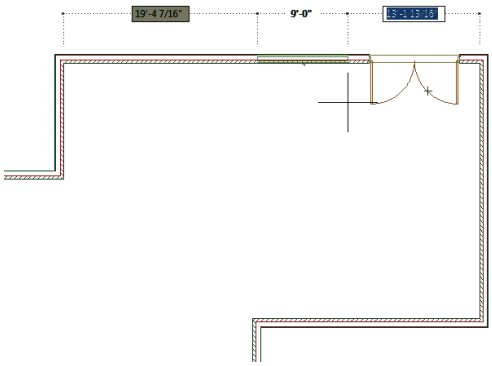

4. Modify the doors to swing outward.
   - If required, select one of the doors, and click the flip grip.

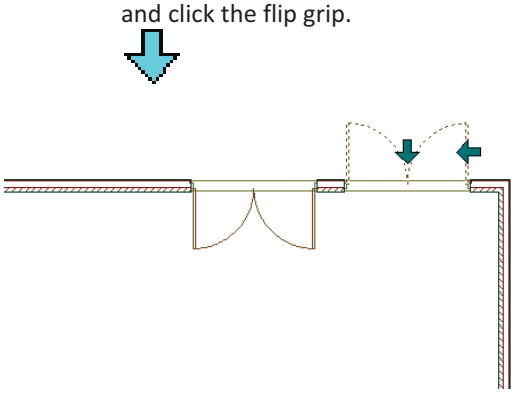

   - Press ESC to clear your selection.
   - If required, repeat the previous steps to flip the swing of the other door. The doors should swing to the outside of the building as shown in the following image.

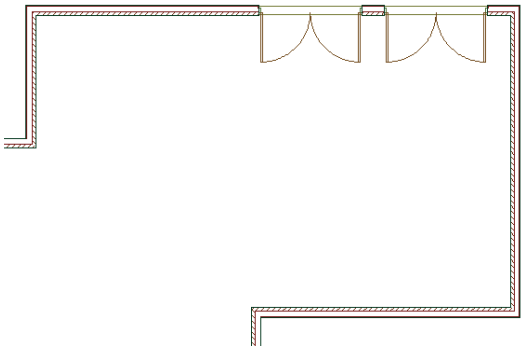

5. View the door/window assemblies in 3D.
   - Click View panel ➤ View drop-down ➤ View, SW Isometric.
   - On the visual Style panel, set the Visual Style to Realistic.
   - Zoom in to the door/window assemblies.

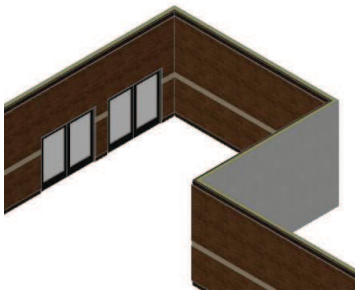

   - Close the drawing without saving.

Lesson: Creating a Foundation Slab

In AutoCAD Architecture, a slab is a three-dimensional object with multiple edges. A slab style controls the appearance of the slab, while a slab edge style controls the appearance of the slab edges.

To create the haunched edges of the foundation slab, a profile is applied to the slab edges in the slab edge style. When you create the slab, this profile is extruded along the slab edges, creating the haunched appearance.

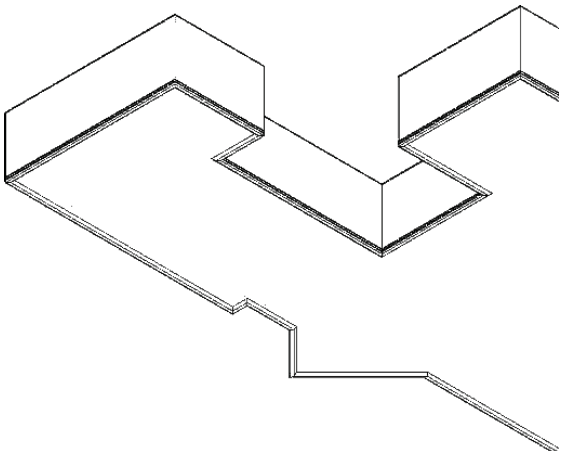

Objectives

After completing this lesson, you will be able to:

- Locate the haunched slab in the Content Catalog.
- Create a haunched slab from existing AutoCAD linework.

Exercise: Creating a Foundation Slab

In this exercise, you create a haunched foundation slab for the factory building. Because the Design tool palette does not contain a tool to create the haunched slab, you must import a haunched slab tool from the Content Browser

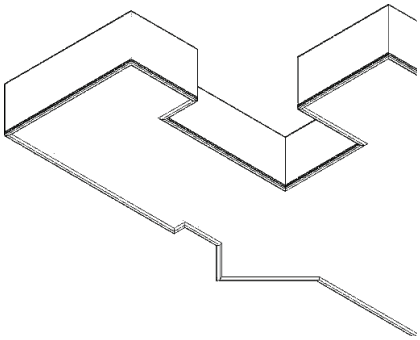

The completed exercise

1. Open **ACA_006_Slab.dwg**.

2. Search for the haunched slab tool in the Content Browser.
   - Click *Home* tab ➤ Build panel ➤ Tools Flyout ➤ **Content Browser**.

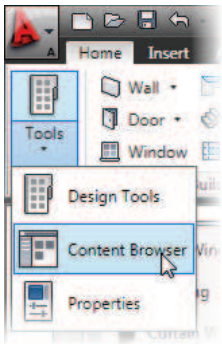

   - In the left pane, under Search, enter **haunch slab**, and click GO. The search results, which include a 6 inch haunch slab tool, displayed in the right pane.

3. Add the **Haunch** (6 inch slab) tool to the Design tool palette.
   - In the lower right corner of the Haunch (6 inch slab) tool icon, click (i-drop).
   - Drag the tool onto the Design tool palette, and when the dropper icon fills, release the mouse button.
   - Close the Content Browser

4. Use the new slab tool to create the foundation slab.
   - If necessary, on the application status bar:
     - Click **Ortho Mode** and **Object Snap** to turn them on.
     - Right-click Object Snap and select **Endpoint**.
   - On the *Design* tab of the Design tool palette, click **Haunch (6 inch slab)**.

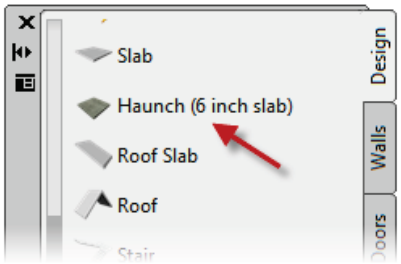

   - Trace the outer perimeter of the building:
   - If necessary, turn off the all layers except the original slab layer.
   - Move the cursor over the outer wall endpoint as shown, and when the endpoint displays, select it.

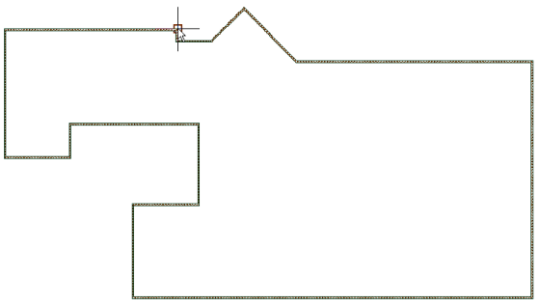

   - Moving in a clockwise direction, continue to select the outer endpoints of each wall segment.
   - When you select the final endpoint, on the command line, enter **c** and press ENTER

5. View the Slab in 3D.
   - Click View panel ➢ View drop-down ➢ **View, SW Isometric**.
   - Click Visual Styles drop-down ➢ **Visual Styles, Hidden**.
   - To view the slab edges, on the ViewCube, click  .

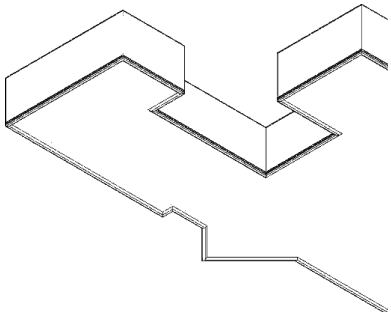

   - Close the drawing without saving.

Chapter Summary

This chapter presented special architectural commands dedicated to creating Walls, Doors, and Slabs. These elements could be created from scratch or applied to existing linework. This chapter focused on the process of creating the outer shell of the factory facility using the architectural specific commands.

Having completed this chapter, you can:

- Create the shell walls from linework in a drawing.
- Use two different techniques to create the structural grid.
- Add curtain walls and an entrance to the shell.
- Add a Slab to the design.

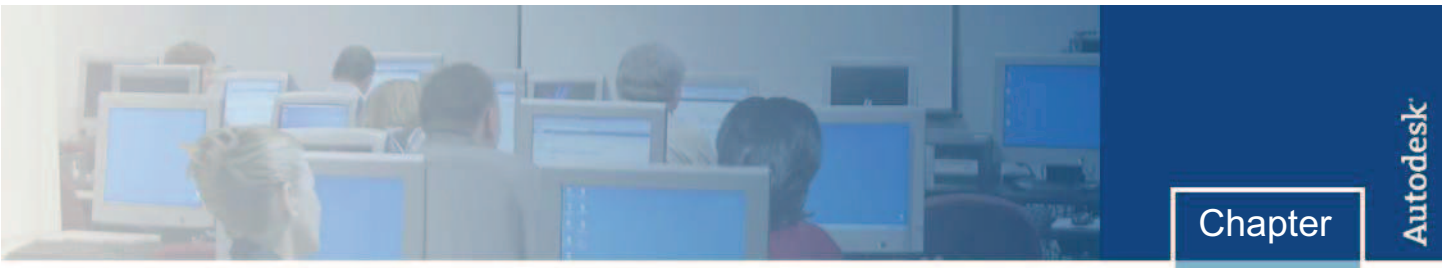

Chapter

4

Creating Interior Features

Interior features such as interior walls, doors, and fixtures, are created using architectural specific commands. Some commands such as walls and windows are located on the Design palette. Many interior features such as restrooms and furniture are available in the Content Browser. This chapter will demonstrate the process of converting existing AutoCAD linework to interior walls, and installing interior access doors and restroom fixtures. The process of installing windows will be reviewed as well.

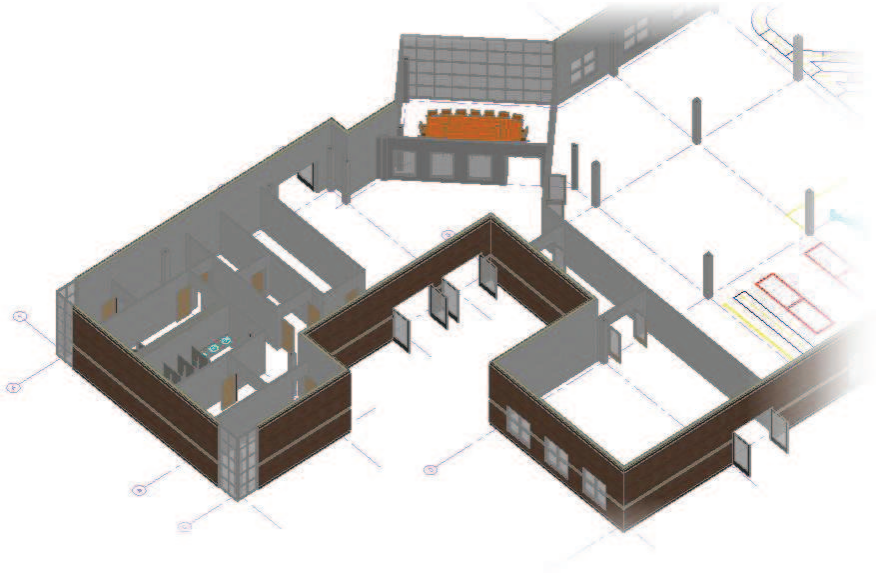

Objectives

After completing this chapter, you will be able to:

- Create interior partition walls.
- Place doors and windows in interior partition walls.
- Layout a restroom created by partition walls.
- Place furniture in the layout.

Lesson: Creating Partition Walls

As with all architectural elements created with AutoCAD Architecture, partition walls can be created from scratch or applied to existing AutoCAD linework. This lesson will demonstrate the process of converting existing AutoCAD linework to interior partition walls.

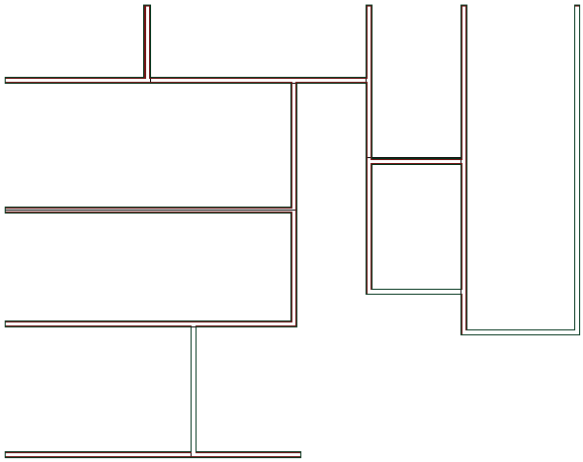

Objectives

After completing this lesson, you will be able to:

- Draw a partition wall.
- Convert existing AutoCAD linework to walls.
- Modify the wall justification.

Exercise: Creating Partition Walls

In this exercise, you create interior partition walls on a building floor plan.

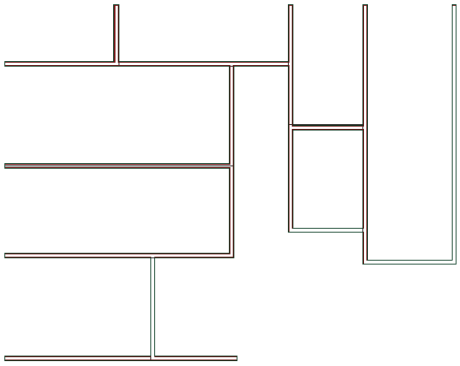

The completed exercise

1. Open **ACA_007_Interior_Walls.dwg**.
   - Zoom in to the upper left corner of the floor plan.

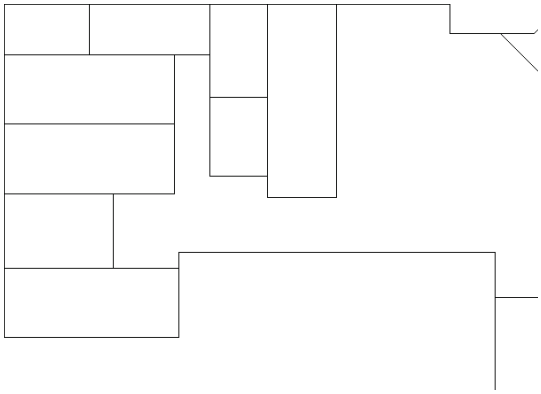

   - If necessary, on the application status bar:
     - Click **Ortho Mode** and **Object Snap** to turn them on.
     - Right-click Object Snap and select **Endpoint**.

2. Draw a wall.
   - On the *Design* tab of the Design tool palette, click the **Wall** tool.

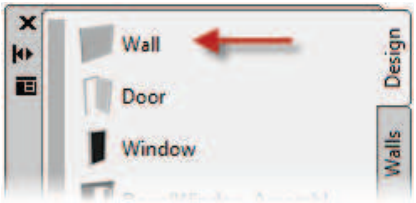

   - On the Properties palette:
     - Under Dimensions, for Width, enter **6''**.
     - For Justify, select **Center**.

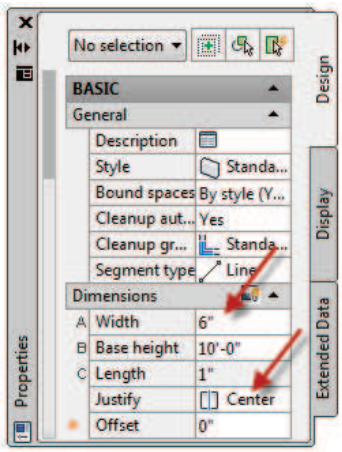

   - Move the cursor to the lowest horizontal interior wall in the image below, and select the right endpoint of the linework as shown.

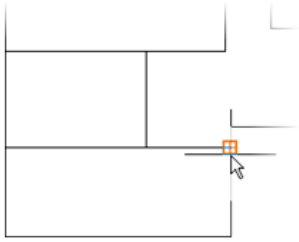

   - Move the cursor to the left, select the left endpoint of the linework, and press ENTER.

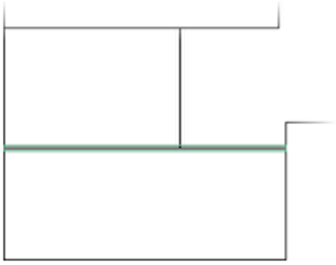

3. Add another partition wall.
   - Right-click in the drawing, and click **Repeat WallADD**.
   - Select the endpoint of the vertical line as shown.

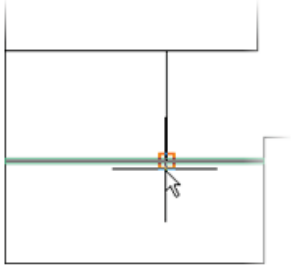

   - Move the cursor up, and select the endpoint of the line as shown.

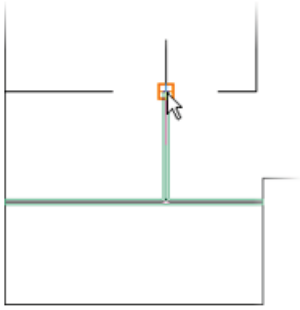

   - Press ENTER.
     Note: Another quick way to add an object to the drawing is to use the **Add Selected** from the right-click menu. This not only repeats the command, but also uses the same style and properties of the object that you selected.

4. Create the remaining walls from existing AutoCAD linework.
   - On the *Design* tab of the Design tool palette, right-click the **Wall** tool and select Apply Tool Properties to Linework.
   - Select the remaining interior walls.

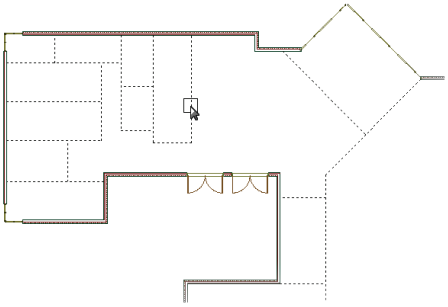

   - Press ENTER twice.

5. Select a different wall style.
   - Select a single interior wall.
   - On the context Wall ribbon, click 

(Select Similar).

   - On the Properties palette, set the Style setting to **Stud-3.5 GWB-0.625 Each Side**.

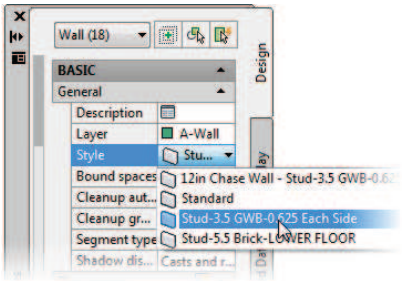

   - Press ESC.

6. **Optional**: View the interior walls in 3D.

7. Close the file without saving.

Lesson: Placing Doors and Windows

Interior access doors are created with the architecturally specific Door command located on the design tool palette. Exterior and Interior windows are created with the Window command also located on the design tool palette. If a door encased in a window is needed, the Door/Window Assemblies command is used. This lesson demonstrates the process of adding interior doors and windows to the factory facility.

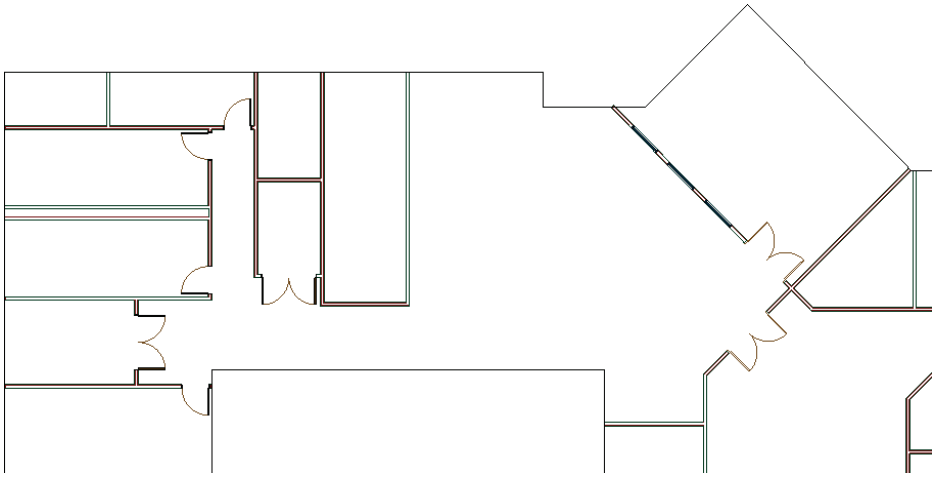

Objectives

After completing this lesson, you will be able to:

- Add interior doors to existing walls.
- Add interior windows to existing walls.

Exercise: Placing Doors and Windows

In this exercise, you will place doors and windows in the interior partition walls on the floor plan.

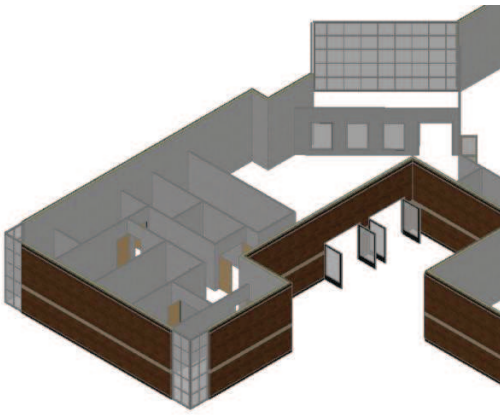

The completed exercise

1. Open the exercise drawing **ACA_008_Interior_Doors_Windows.dwg**.
   - Zoom to the upper left portion of the floor plan.
   - If necessary, on the application status bar, click **Dynamic Input** to display temporary dimensions as you place doors and windows.

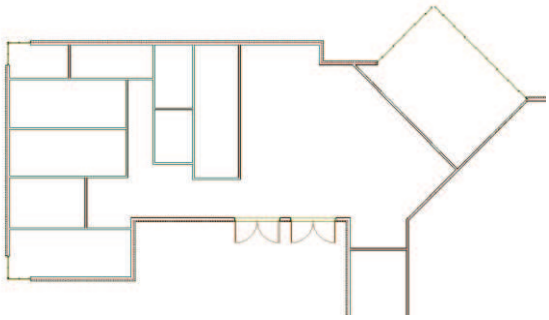

2. Place the double doors.
   - On the *Design* tab of the Design tool palette, click the **Door** tool.

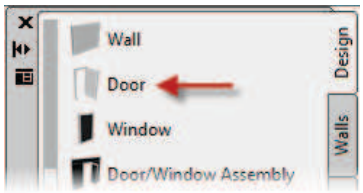

   - On the Properties palette:
     Under General, for Style select **Hinged – Double – Metal Frame in Plan**.
   - Under Dimension, for Width, enter **6'**.
   - Under Location, for Position along wall, select **Center**.

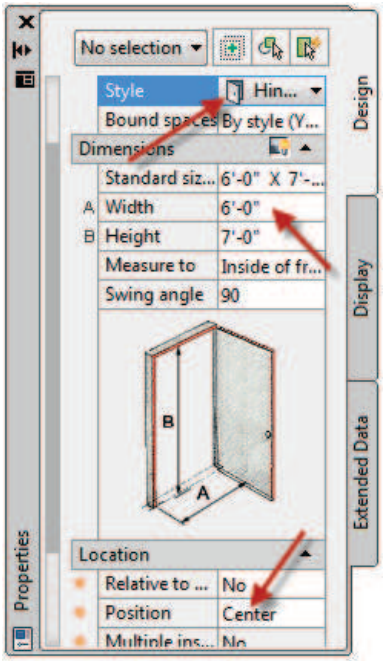

   - If necessary, on the application status bar, click **Osnap** to turn it off.
   - Select the center of the wall as shown, and when a centered door displays, click to place it.

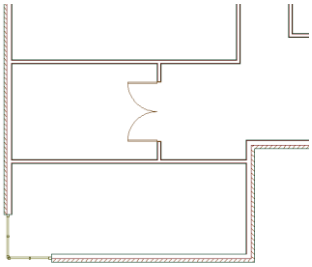

   - Press ENTER.

3. Place another door.
   - Using the same technique, place another door as shown.

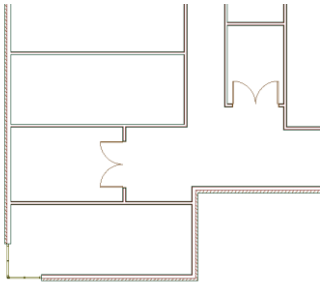

   - Adjust the door swing direction if necessary.

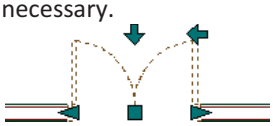

   - Press ESC if necessary.

4. Place single doors.
   - On the *Design* tab of the Design tool palette, click the **Door** tool.
   - On the Properties palette:
     - Under General, for Style, select **Hinged – Single – Metal Frame in Plan**.
     - Under Dimensions, for Width, enter **3'**.
     - Under Position, select **Offset**.
     - For Automatic Offset, enter **4”**.
   - Place the doors as shown in the following image.

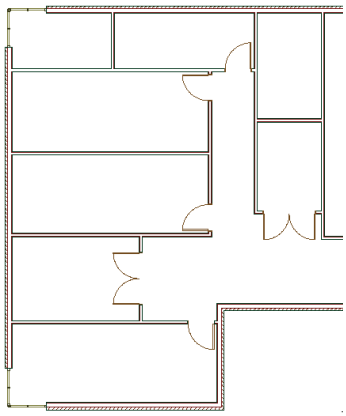

   - Press ESC.

5. Place two double doors accessing the conference room and the factory floor.
   - On the *Design* tab of the Design tool palette, click the **Door** tool.
   - On the Properties palette:
     - Under General, for Style, select **Hinged – Double – Full Lite**.
     - Under Dimensions, for Width, enter **6'**.
   - Under Location, for Position along wall, select **Offset/Center** (depending on the installation requirements).
   - If necessary, for Automatic Offset, enter **1'**.
   - Place doors as shown, and press ESC.

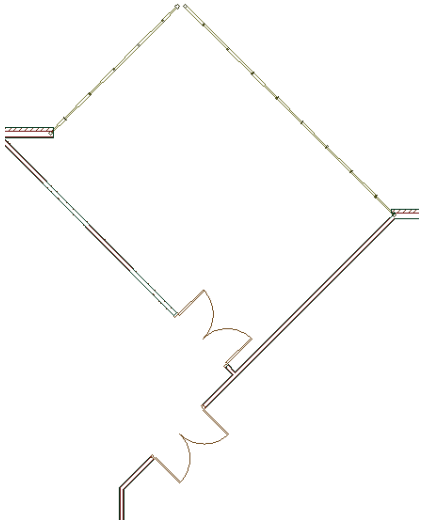

6. Place windows.
   - On the *Design* tab of the Design tool palette, click the **Window** tool.

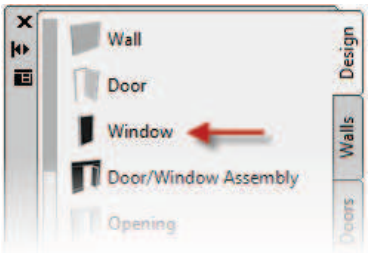

   - On the Properties palette:
     Under Dimensions, for Width, enter **4'**.
     For Height, enter **6'**.
     Under Location, for Position along wall, select **Unconstrained**.
     For Vertical alignment, select **Head**.
     For Head height, enter **7'**.

- Place three windows in the wall as shown, and press ESC.

  Exact placement is not necessary.

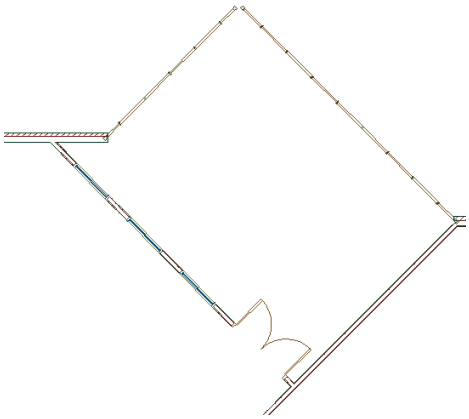

7. View the floor plan in 3D.

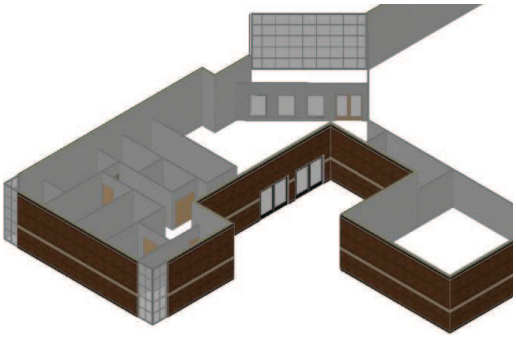

8. Change the display of the doors to open.

   Autodesk Factory Design Suite enables you to walk through the factory layout and experience the facility before it is constructed. To make navigation easier, the doors should be displayed open instead of closed.

   - Select a single door.
   - On the Properties Palette, click the *Display* tab.
   - On the *Display* tab, set the value of the Swing Angle to **90**.
   - Press ENTER.

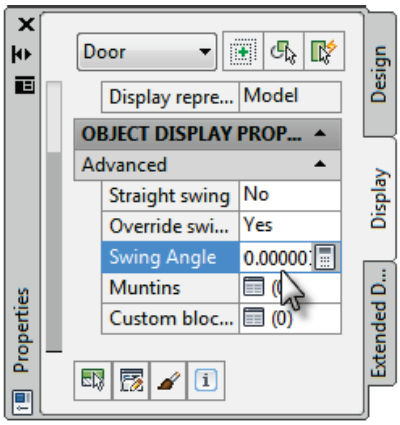

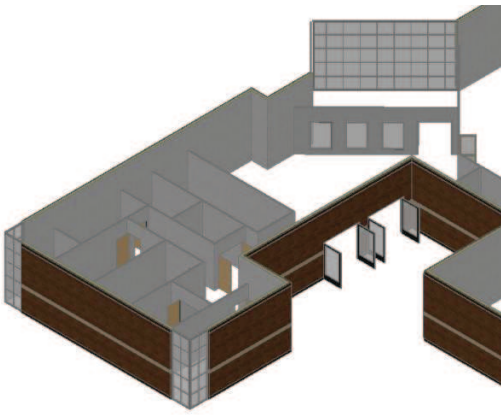

- Close the Drawing without saving.

Lesson: Laying out a Restroom

The restroom fixtures that you place on the floor plan are contained in a single block. The block contains the fixtures in a pre-constructed restroom layout, including accessories and stall partitions.

After you place the restroom layout, you modify it to better fit the floor plan. Because the restroom layout is a block, you can explode it to edit its individual components.

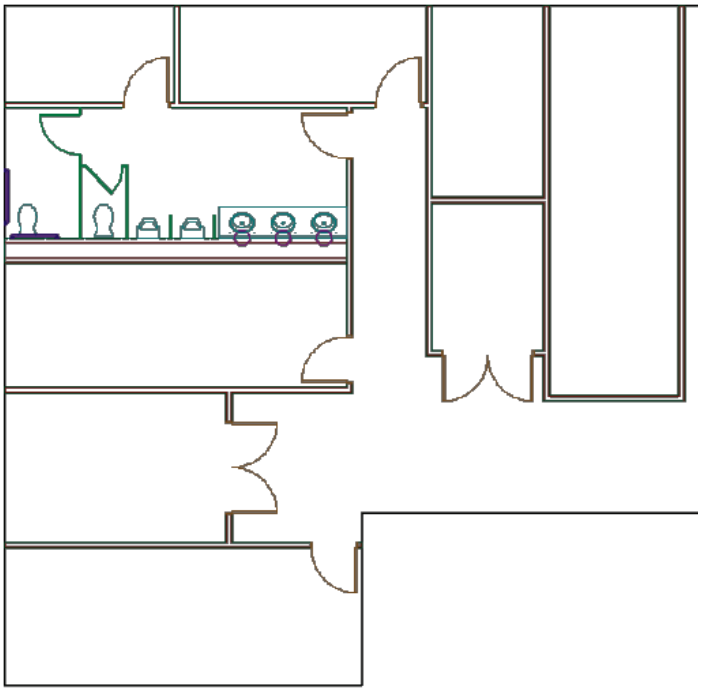

Objectives

After completing this lesson, you will be able to:

- Convert an existing wall to a chase wall.
- Insert a preset restroom from the Content Browser.
- Explode and modify the restroom design.

Exercise: Laying out a Restroom

In this exercise, you lay out a restroom. You create a chase wall on the floor plan, and then place fixtures, accessories, and stall partitions on the floor plan.

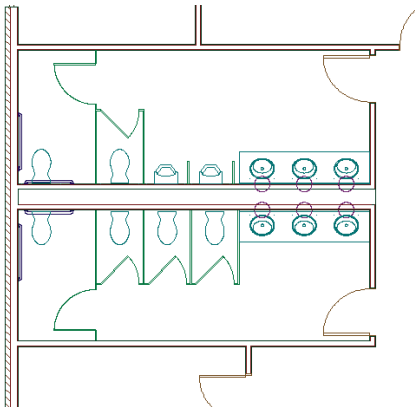

The completed exercise

1. Open **ACA_009_Restrooms.dwg**.

2. Change a wall style to create a chase wall.
   - Select the wall in the following image.

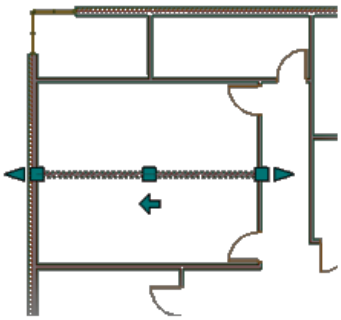

   - On the Properties palette, under General, for Style, select **12in Chase Wall – Stud-3.5 GWB-0.625 Each Side**, and press ESC.
     The chase wall divides the 2 rooms that are intended for use as restrooms. You want to lay out the lower restroom, which is the women's restroom.

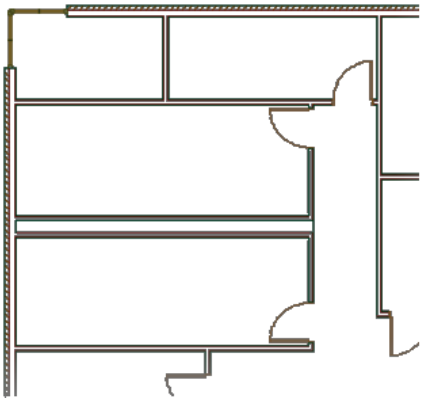

3. Add a restroom layout to the design.
   - Open the Content Browser.
   - In the left pane, under Search, enter **rest room**, and click **GO**.
   - In the right pane, locate the **Rest Room (Women)** tool. You may have to click **Next** in the bottom right corner to view more of your search results.
   - In the lower-right corner of the Rest Room (Women) tool icon, click (i-drop).
   - Drag the icon into the drawing window.
   - On the Insert dialog box, place a checkmark for **Insertion point** and **Rotation** angle then click OK.

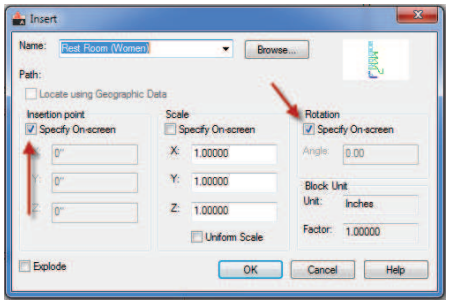

   - Move the cursor over the endpoint of the wall as shown and click.

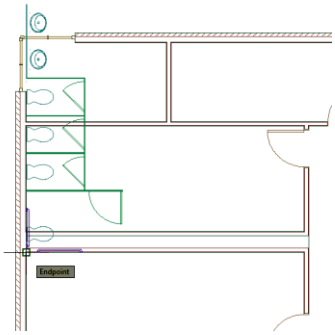

- Rotate the block into the correct position as shown in the following image and click.

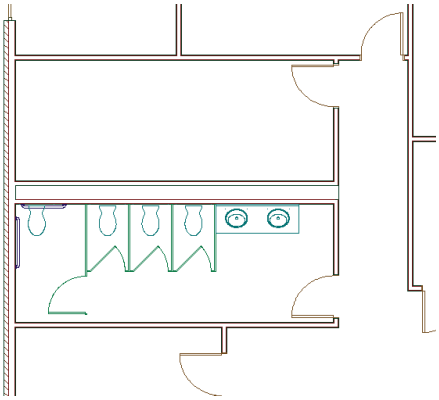

4. Explode the restroom layout.
   - Explode the restroom layout block.
   - Select the restroom layout.
   - Click *Home* tab ➤ Modify panel ➤ **Explode**.

5. Lengthen the stall wall:
   - Select the wall to display its grips.

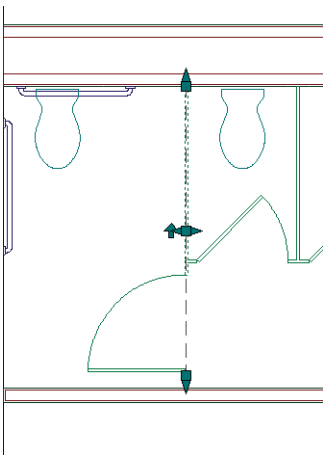

   - On the application status bar, right-click **Object Snap**.
   - Click Wall Justification Line to turn it off, and click **Perpendicular** to turn it on.

     This allows you to snap to the face of the interior wall while lengthening the stall wall.

   - Select the bottom triangular cyan lengthen grip.
   - Click the face of the wall, and press ESC.

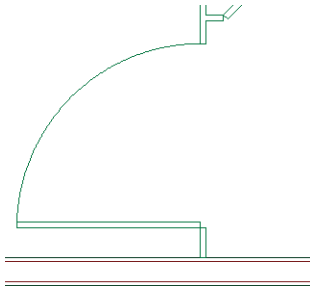

6. Replace the lavatories.
   - Select the lavatories and counter top, and press DELETE.
   - Open the Content Browser, search for the **Lavs (3)** tool, and use i-drop to drag it into the drawing window.
   - On the Insert dialog box, click **OK**.
   - Move the cursor over the endpoint of the stall wall as shown.

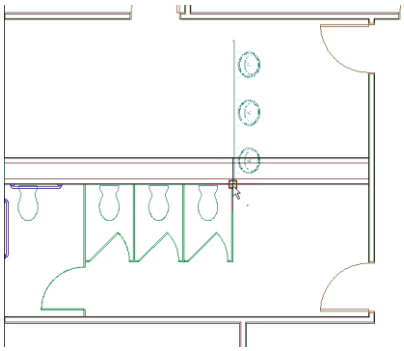

   - Rotate the block into position and click.
   - Explode the lavatory block and grip edit the counter to the proper position.

7. **Optional**: Using the techniques learned in this exercise, layout the men's restroom.

   Tip: Use the following tips to complete the restroom layouts.
   - Use the Content Browser to locate a men's restroom layout block.
   - Before you explode the block, use the mirror command to create the necessary layout orientation.

8. Close the drawing without saving.

Lesson: Placing Furniture

Thousands of furniture and accessories are available in the Content Browser. You place furniture on the floor plan as a single multi-view block. Like an AutoCAD block, a multi-view block is an object that can combine two or more objects to create a single object. Unlike an AutoCAD block, a multi-view block can have different representations when viewed from alternate directions. This lesson demonstrates the process of placing furniture into an existing floor plan.

The conference table in Plan view.

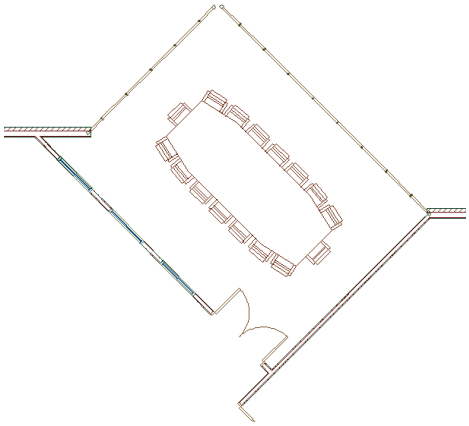

The conference table in a 3D view.

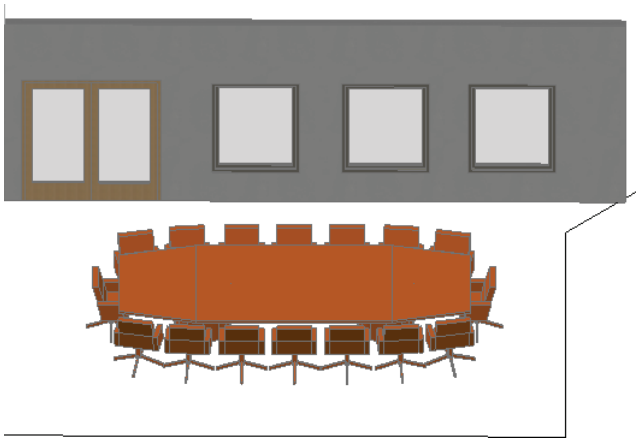

Objectives

After completing this lesson, you will be able to:

- Place furniture from the Content Browser into an existing floor plan.

Exercise: Placing Furniture

In this exercise, you place a conference table and chairs on the floor plan as a single multi-view block.

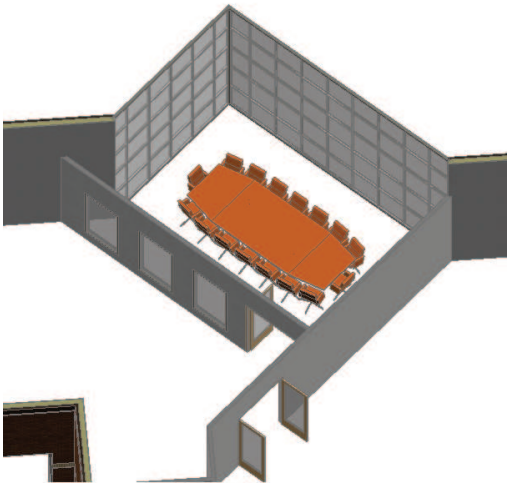

The completed exercise

1. Open **ACA_010_Furniture.dwg**.

2. Browse for the Conference table.
   - Click *Home* tab ➢ Build panel ➢ Tools drop-down ➢ **Content Browser**.
   - In the right pane of the Content Browser, click **Design Tool Catalog - Imperial**.
   - In the left pane, under Search, enter **conference table**, and click **GO**.
   - In the right pane, locate the **Conf 16ft - 16 Seat** tool.
   - In the lower right corner of the **Conf 16ft - 16 Seat** tool, click (i-drop).
   - Drag the tool to the AutoCAD drawing window and release the mouse button.
   - On the Insert dialog box, click OK.

3. Place the conference table.
   - Zoom to the large conference room on the floor plan.

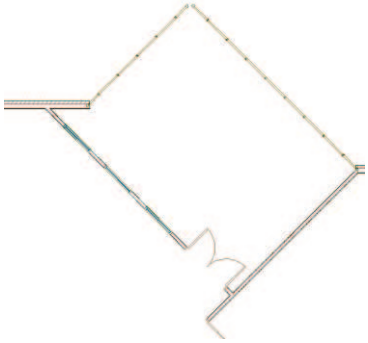

   - Move the cursor over the center of the conference room and click to insert the conference table as shown in the following image.

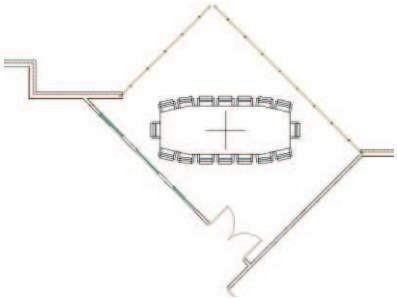

   - Rotate the conference table into the correct position and click to finish the operation.
   - Press ESC.

4. View the conference table in 3D.

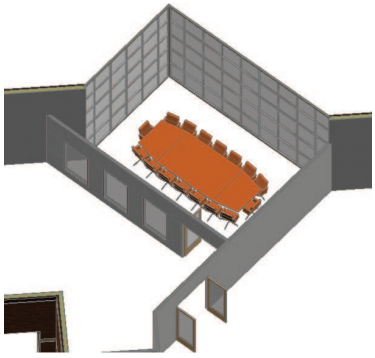

5. **Optional:** Search the Content Browser for additional office furnishing and place them on the floor plan.

6. Close the drawing without saving.

Exercise: Challenge

Using the methods you have learned and the extra tips in this section, convert the linework in this drawing to a suitable building shell.

1. Open **ACA_013_Challenge.dwg**.

2. Use the tips below to complete the factory floor plan:

- Exterior Wall – **Stud-5.5 Brick-LOWER FLOOR – 15'**. Base Height – Right Justified.
- Interior Walls - **Stud-3.5 GWB-0.625** Each Side – Center Justified.
- Convert existing grid lines to custom grid.
- Columns - **8" Steel Column w/ 12"x12" Column Cover**, available in the Content Catalog.
- Restroom - Use the 3 Lavs block from the Content Catalog for the men's and women's restrooms.
- Insert an Overhead – Coiling Industrial rolling overhead door from the Content Catalog.
- Rolling Door Centered in the Wall at each end of the facility - Door Size **12' x 12'**.
- Doors to suit.
- Use the images below to aid in the completion of the challenge exercise.

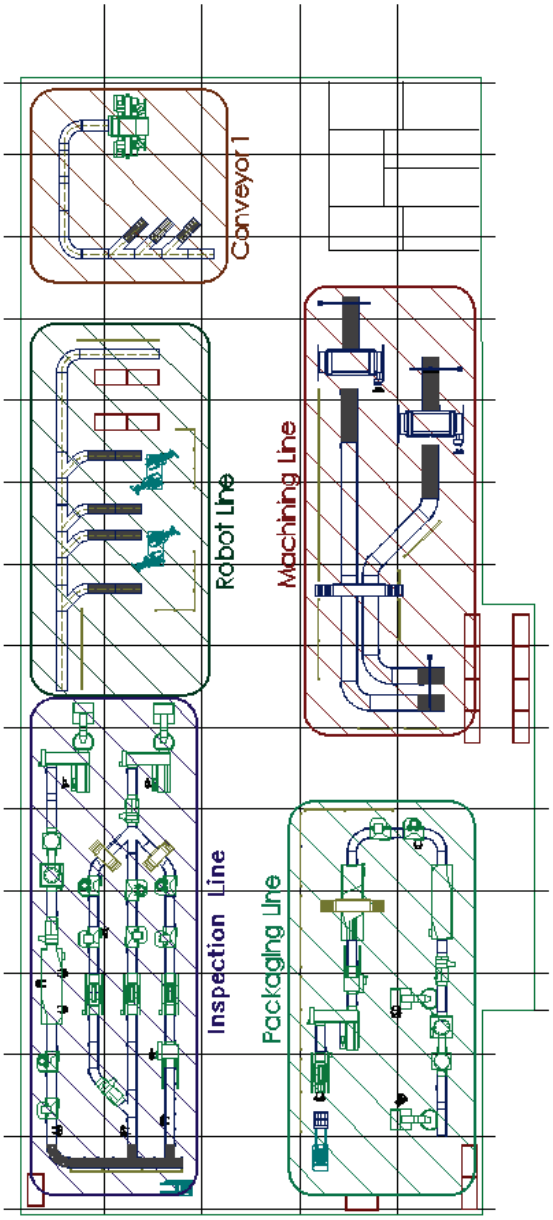

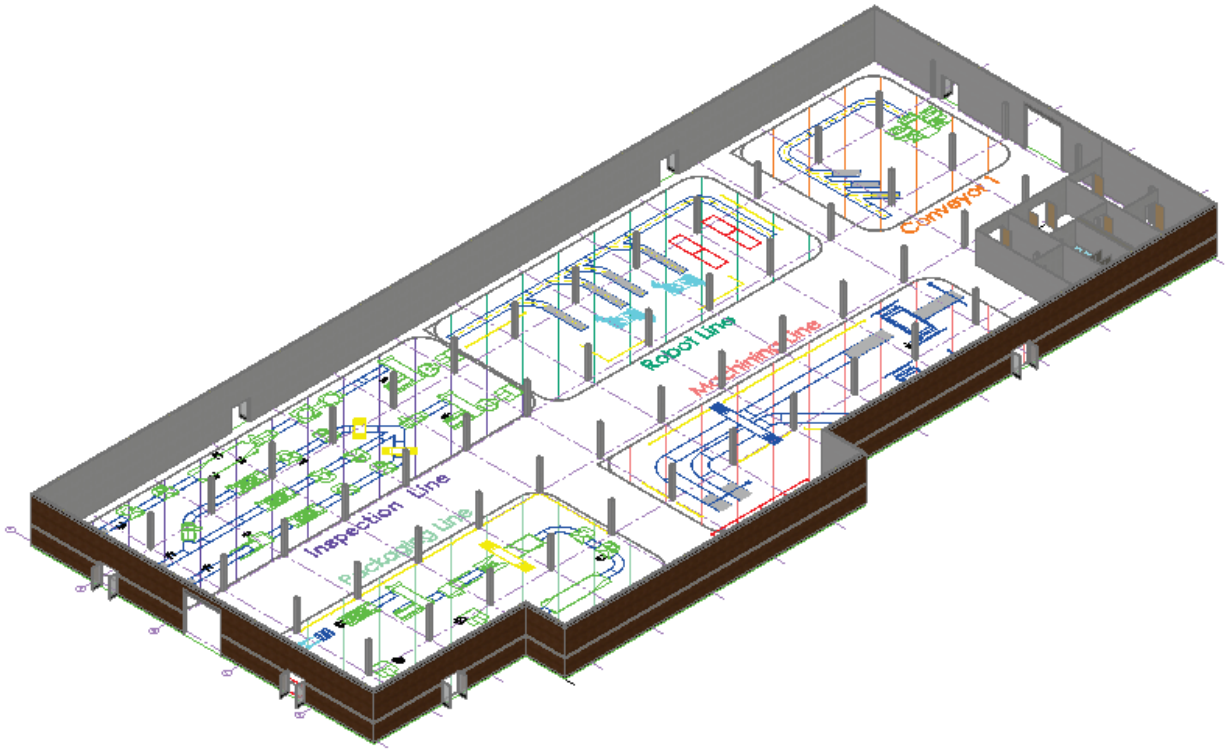

This image shows the completed exercise viewed in 3D.

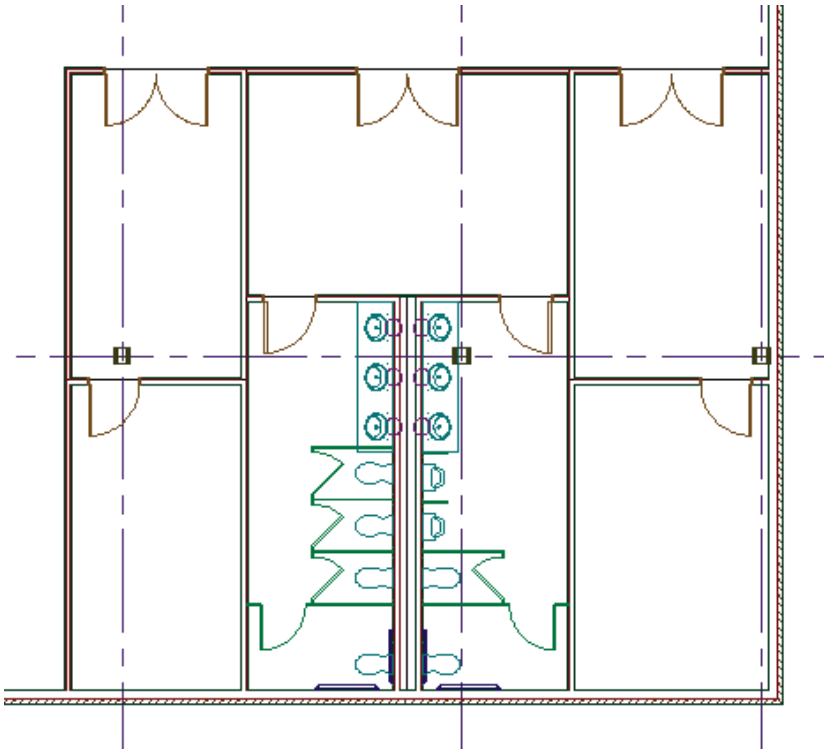

This image shows the finished office and restroom spaces in plan view.

Chapter Summary

This chapter presented the tools and recommended workflows for basic shape design. Using these techniques, you can now create more complex 2D sketches at different locations on your part, combine multiple 3D features to create various shapes, and modify those shapes at any time during the design process.

Having completed this chapter, you can:

- Create interior partition walls.
- Place doors and windows in interior partition walls.
- Layout a restroom created by partition walls.
- Place furniture in the layout.

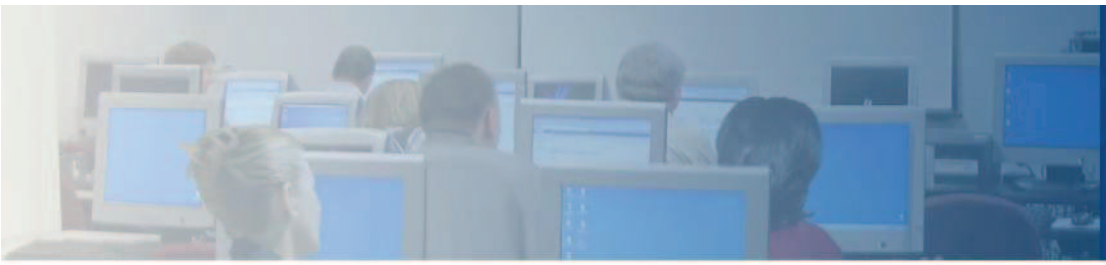

Chapter

5

Autodesk Inventor Getting Started

Autodesk® Inventor® has a context-sensitive user interface that provides you with the tools relevant to the tasks being performed. A comprehensive online help and tutorial system provides you with information to help you learn the application. This chapter introduces the tools and interface options that you use on a constant basis.

This chapter also introduces fundamental of parametric part design concepts that enable you to capture design intent and build intelligence into your designs.

Objectives

After completing this chapter, you will be able to:

- Identify the main user interface components that are common to all Autodesk Inventor design environments and describe how to access different tools.
- View all aspects of your design by efficiently navigating around in 2D and 3D space.
- Describe the characteristics and benefits of a parametric part model.

Lesson: Autodesk Inventor User Interface

This lesson describes the application interface. You are introduced to the different file types (part, assembly, presentation, and drawing) you work with as you create and document your designs, and you examine the common user interface elements and view management tools in these environments.

As with all computer applications, the User Interface (UI) is what you use to interact with the program. While the Autodesk Inventor UI shares many common themes and elements with other Microsoft Windows applications, it also has some unique elements and functionalities that may be new to you, even as an experienced CAD user.

In the following illustration, the Autodesk Inventor User Interface is shown.

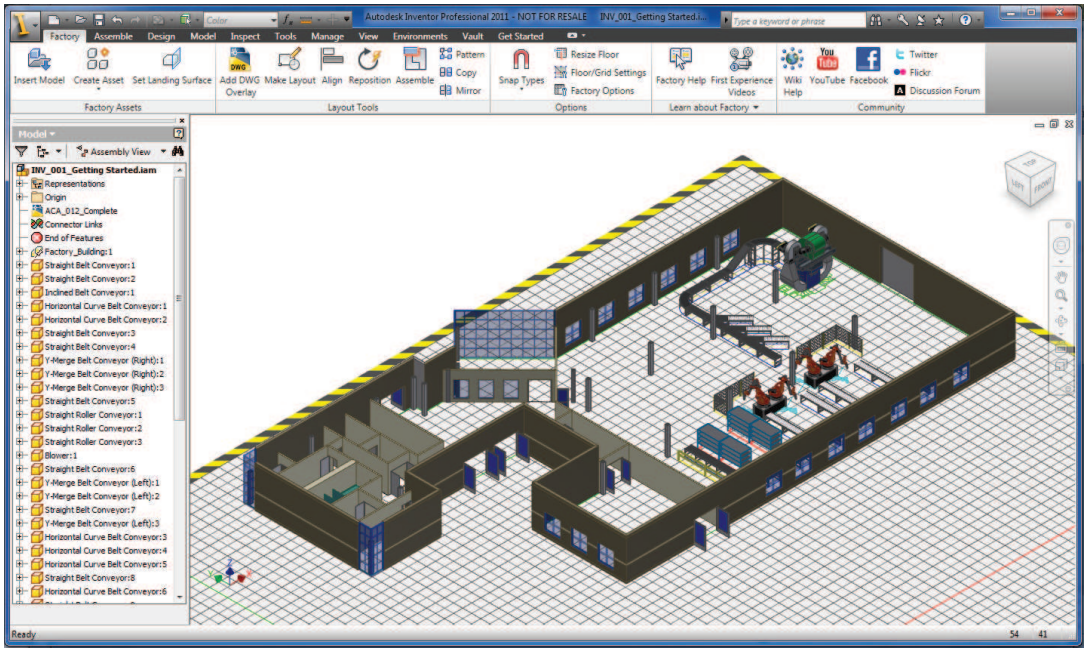

Objectives

After completing this lesson, you will be able to:

- Describe the multiple environments within Autodesk Inventor.
- Describe what project files are used for.
- Describe the types of files Autodesk Inventor creates and the kinds of information they store.
- Identify the major components of the Autodesk Inventor user interface.
- Identify the browser and panel bar in the assembly, part, presentation, and drawing environments.
- Identify and access various types of online help and tutorial resources.

About Multiple Environments

In order to provide the greatest design flexibility and reuse, each part, assembly, and drawing is stored in a separate file. Each part file is a stand-alone entity that can be used in different assembly files and drawing files. When you make a change to a part, the change is evident in each assembly or drawing that references that part. Assembly files can be referenced by other assembly files, presentation files, and drawing files. IDW and DWG files are now interchangeable. Depending on your workflow and need for use in downstream applications, you can create your production drawings with either file format.

The basic file references that exist in a typical 3D design are represented in the following illustration.

1. **Assembly files:** IAM files reference part files and are referenced by drawing files.
2. **Part files:** IPT files are referenced by assembly files and drawing files.
3. **Drawing files:** DWG files reference assembly files and part files.
4. **Inventor Drawing files:** IDW files are interchangeable with DWG files in Inventor and reference assembly and part files.

Using Template Files

Template files serve as the basis for all new files that you create. When you begin a file from a template file, you can control default settings such as units, snap spacing, and default tolerances in the new file.

The application offers template files for each type of file. Template files are categorized into two main groups: English for English units (inches and feet), and Metric for metric units (millimeters and meters).

The New File dialog box has three tabs: Default, English, and Metric. The Default tab presents templates based on the default unit that you select during installation, while the English and Metric tabs present template files in their respective units.

Autodesk Factory Design Suite provides a special template for the creation of Factory Layouts (1) .

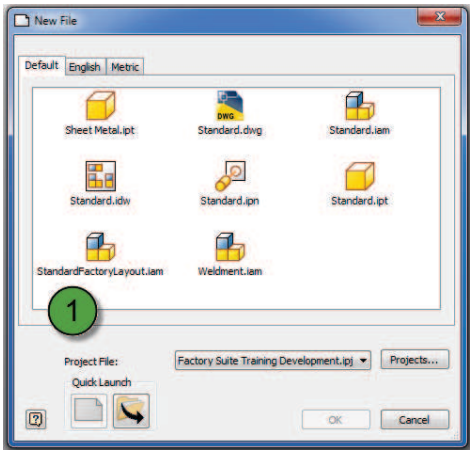

Part Modeling Environment

In the part modeling environment:

- You create and edit 3D part models.
- The interface adjusts automatically to present tools for your current task, for example, tools for sketching or tools to create 3D features.

The following illustration shows the user interface in the part modeling environment.

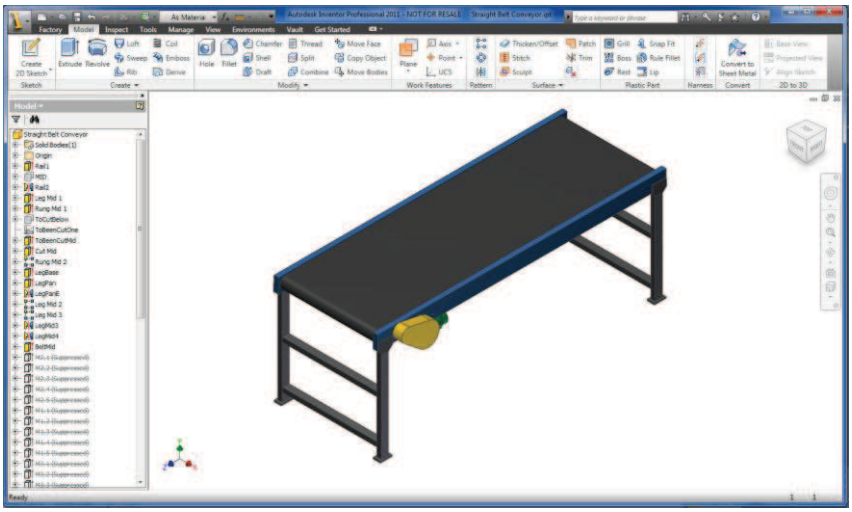

Assembly Modeling Environment

In the assembly modeling environment:

- You build and edit 3D assembly models. The components displayed in the system are references to external parts and subassemblies.
- You use assembly specific tools to position and build relationships between components.
- A common set of viewing tools is available.

The following illustration shows the user interface in the assembly modeling environment.

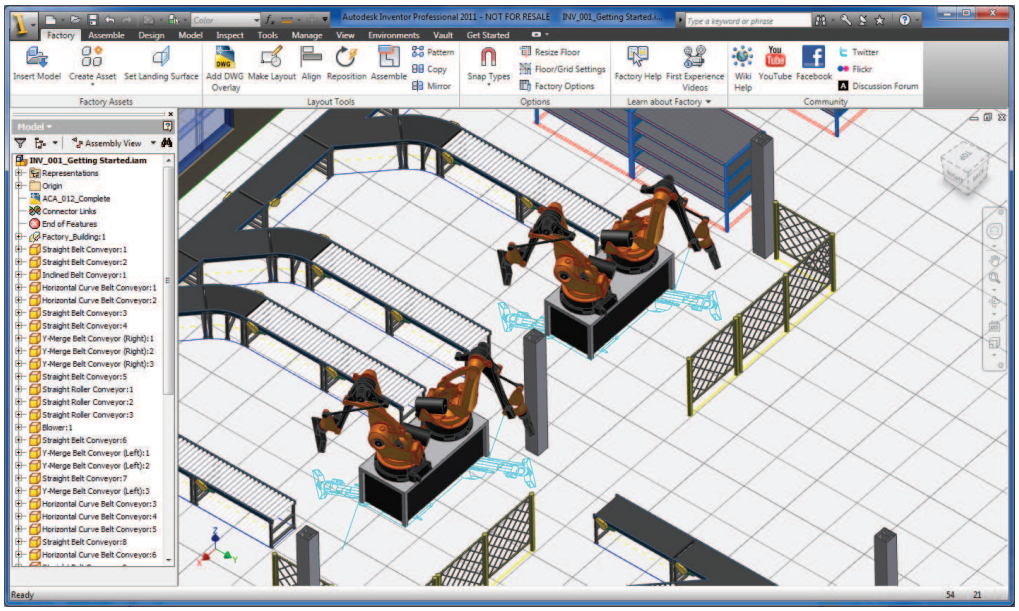

Presentation Environment

In the presentation environment:

- You create exploded assembly views.
- You can record an animation of an exploded view to help document your assembly.
- The presentation file references an existing assembly.
- A common set of viewing tools is available.

The following illustration shows the user interface in the presentation environment.

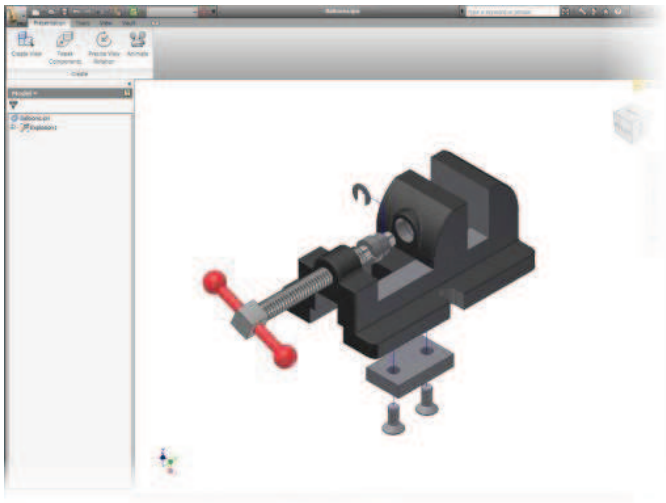

Drawing Environment

In the drawing environment:

- You create 2D drawings of parts and assemblies.
- A drawing file references one or more parts, assemblies, or presentation files. Changes to the part or assembly model update the associated drawing views and annotations.

The following illustration shows the user interface in the drawing environment.

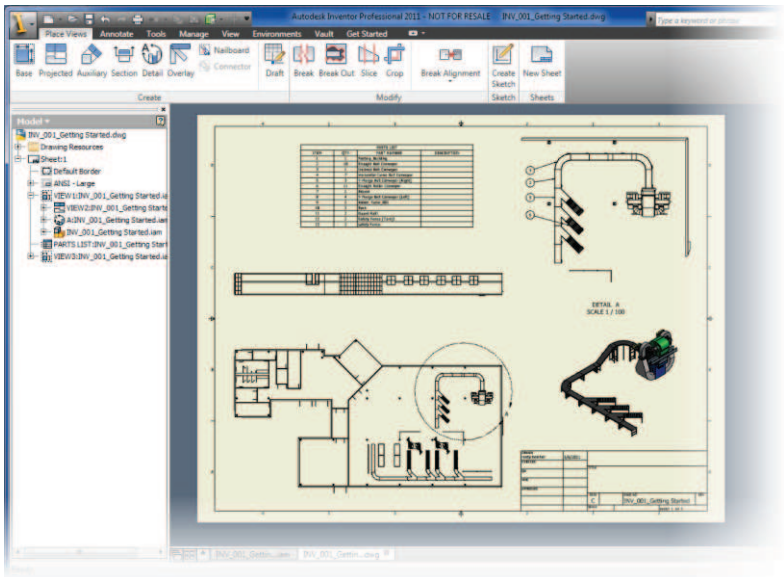

About Project Files

As you create designs in Autodesk Inventor, file dependencies are created between files of different types. For example, when you create a 3D assembly, a file dependency between the assembly and its part models is created. As your designs grow in complexity, these dependencies can become more complicated. Autodesk Inventor utilizes project files to locate the required files as they are needed. As a result of using the information contained in the project file, when you open that 3D assembly, Autodesk Inventor can locate the 3D part files and display them properly.

In the context of an introduction to the Autodesk Inventor user interface, all that is important to realize is that you must have an active project before you create any files. This is why the project file is listed in the New File dialog box. Autodesk Inventor installs several sample project files, but the default project is initially active.

Inventor File Types

To maximize performance, Autodesk Inventor uses different file types for each type of file. Assembly files are stored in a different type of file than the parts that are used to create them. 2D drawing information can be stored in either the IDW file type that is unique to Autodesk Inventor, or the DWG format that is native to AutoCAD® and is an accepted industry standard.

In the following illustration, the New File dialog box illustrates the different types of files that you can create with Autodesk Inventor.

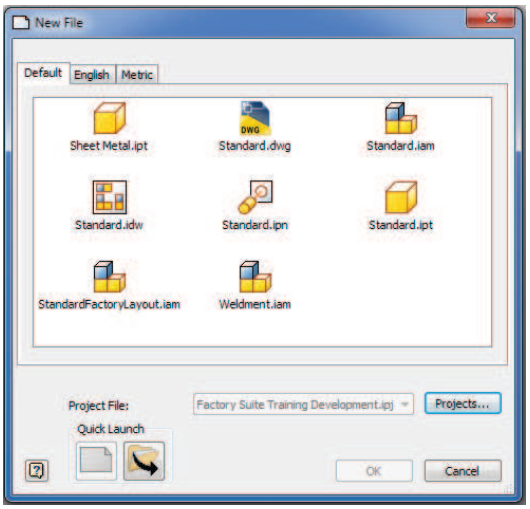

Part Files

Part files (*.ipt*) represent the foundation of all designs using Autodesk Inventor. You use the part file to describe the individual parts that make up an assembly.

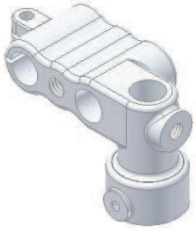

Assembly Files

Assembly (*.iam*) files consist of multiple part files assembled in a single file to represent your assembly. You use assembly constraints to constrain all the parts to each other. The assembly file contains references to all of its component files.

Presentation Files

You use presentation files (*.ipn*) to create exploded views of the assembly. It is also possible to animate the exploded views to simulate how the assembly should be put together or taken apart.

Drawing Files

You use drawing files (**.idw*) to create the necessary 2D documentation of your design. Drawing files include dimensions, annotations, and views required for manufacturing. When you use a drawing file to create 2D views of an existing 3D model, the views are associative to the 3D model, and changes in model geometry are reflected in the drawing automatically. You can also use drawing files to create simple 2D drawings in much the same way that you use other 2D drawing programs.

Inventor drawing files can also be stored in the standard DWG format. If you use this format for your 2D drawings, they can be opened and saved in AutoCAD. This is a very useful option for users who must share their design data with others who use AutoCAD.

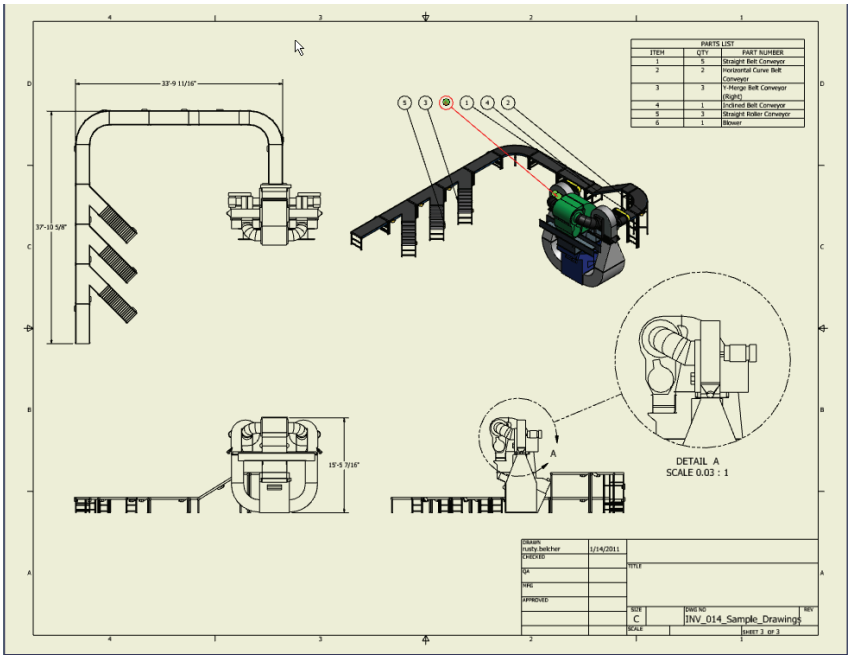

User Interface

All environments share a common layout for tabs on a single toolbar across the top of the application window called the ribbon. The ribbon contains tools and commands for specific tasks on separate tabs. Each environment, assembly, part, or drawing for example, displays tabs and tools specific to that environment. As you change tasks within a single environment, the ribbon adjusts to present the appropriate tabs and tools.

The following illustration shows the major components of the Autodesk Inventor user interface. The ribbon and tabs are displayed at the top of the application window.

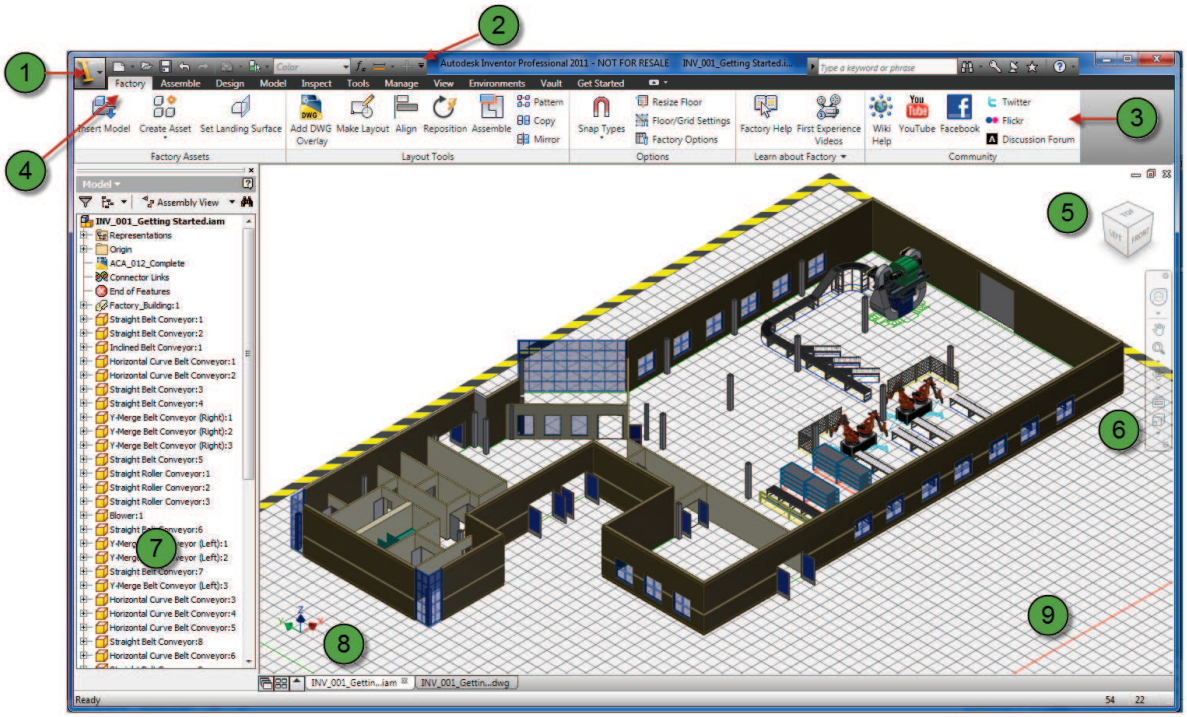

1. Application Menu
2. Quick Access Toolbar
3. Ribbon
4. Ribbon Tabs
5. ViewCube
6. Navigation Bar
7. Browser
8. 3D Indicator
9. Graphics Window

Interface Structure

Autodesk Inventor uses a standard structure common in all Microsoft Windows applications. The structure is context-sensitive based on the environment and mode you are using.

As you are learning the application more thoroughly, you should take the time to familiarize yourself with the different options that are displayed on the ribbon in different work environments.

The following illustration shows the Assemble tab in the assembly modeling environment.

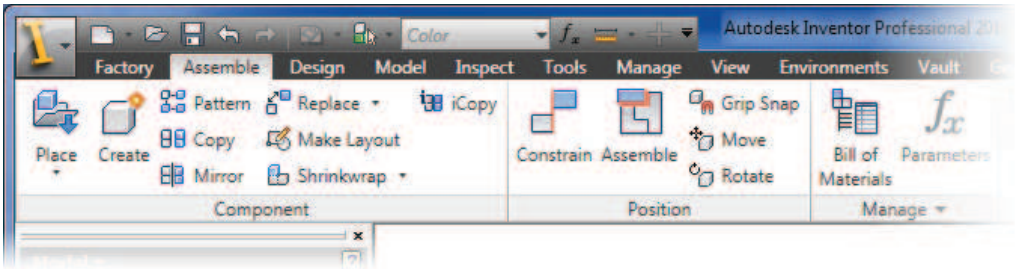

The following illustration shows the Model tab in the part modeling environment.

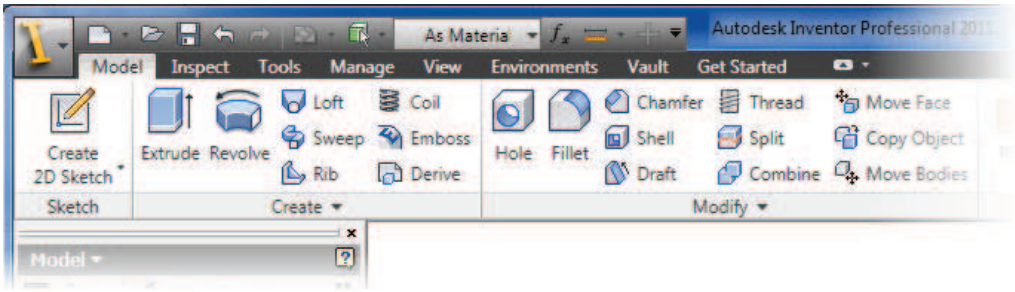

The following illustration shows the Place Views tab in the drawing environment.

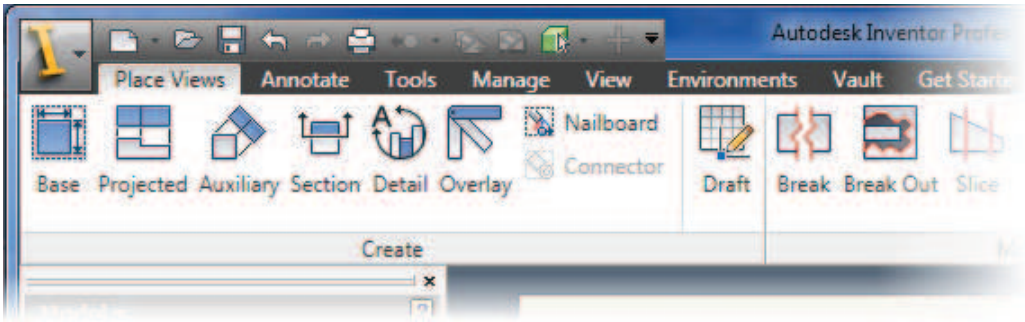

Quick Access Toolbar

By default, a single Inventor standard toolbar is displayed in all environments and is called the Quick Access toolbar. When you change between environments, the Quick Access toolbar updates to present valid tools for the environment. The toolbar contains tools for file handling, settings, view manipulation, and model or document appearance.

A section of the Quick Access toolbar is displayed in the following illustration. It is organized into groups based on functionality. This area of the toolbar displays tools for standard file and modeling operations.

1. Standard file management tools
2. Undo and Redo
3. Environment navigation
4. Update document
5. Selection filters
6. Color List
7. Design Doctor

Context-Sensitive Tools

As you switch between environments or between tasks in a single environment, Autodesk Inventor displays the appropriate tools and information for the current task. The ribbon automatically presents tabs and tools for the current task. The browser displays information on the active environment.

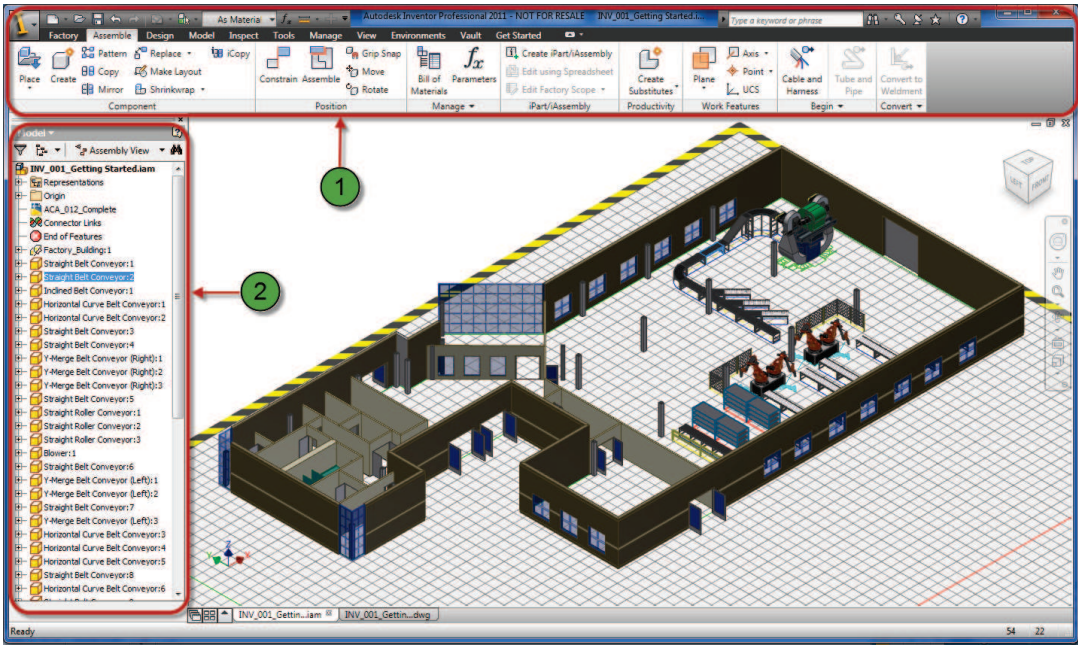

1. The ribbon is your primary interface for accessing the tools available while you design. The context-sensitive design presents the relevant tools based on the current context of your design session. For example, when you switch from assembly modeling to part modeling, the ribbon switches automatically to display the correct tabs and tools for the context where you work.

2. The browser is one of the main interface components. It is context-sensitive with the environment you use. For example, when you work on an assembly you use the browser to present information specific to the assembly environment. While you use the part modeling environment, the browser displays information that is relevant to part modeling.

Model Tab

When you are in the part modeling environment, the Model tab is displayed while you create and edit part models. You use these tools to create parametric features on the part.

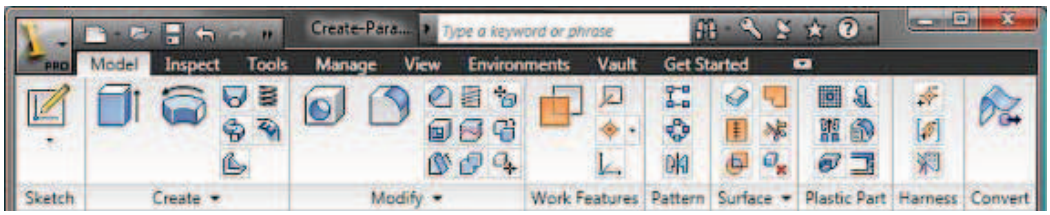

Sketch Tab

You use the Sketch tab in the modeling environment to create 2D parametric sketches, dimensions, and constraints. You use the same set of tools on the Assemble tab when creating a sketch in the assembly environment.

Part Modeling Browser

The browser displays all features you use to create the part. The features are listed in the order in which they are created. The browser also displays the Origin folder at the top of the list which contains the default *X*, *Y*, and *Z* planes, axes, and center point.

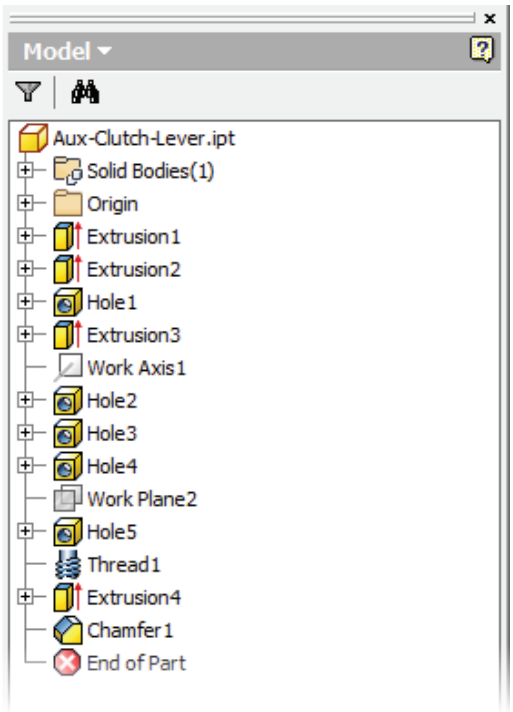

Assembly Modeling Environment

When you are in the assembly modeling environment, the browser displays all the parts you use in the assembly. It also lists the Origin folder containing the default X, Y, and Z planes, axes, and center point of the assembly.

If applied, nested under each part, you see the assembly constraints. If you select an assembly constraint, an edit box is displayed at the bottom of the browser, enabling you to edit the offset or angle value for the constraint.

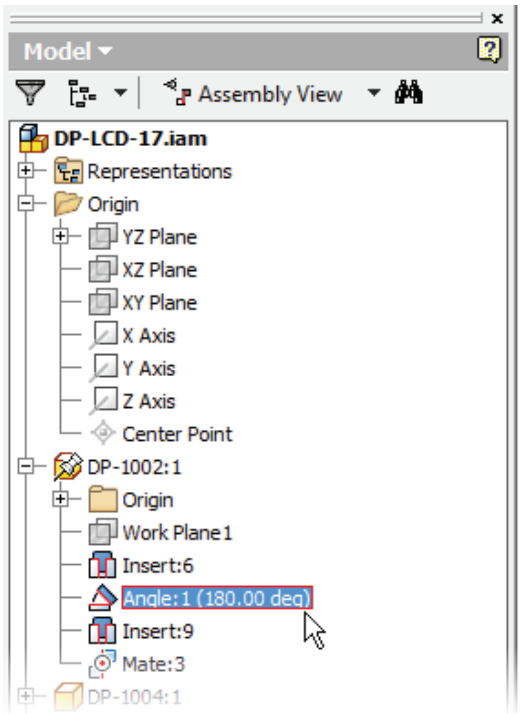

In the assembly environment, you can use the Modeling View option in the Assembly View drop-down list to display the part features nested under the parts instead of the assembly constraints. This is useful when performing part modeling functions in the context of the assembly.

In the following illustration, the Assemble tab is shown in the default Normal mode. In Normal mode, the tool icons and names are displayed.

You can also choose to display tool icons without text by right-clicking anywhere on the ribbon and then clicking Ribbon Appearance > Text Off.

Design Accelerator

Clicking on the ribbon, Design tab displays the Design Accelerator tools.

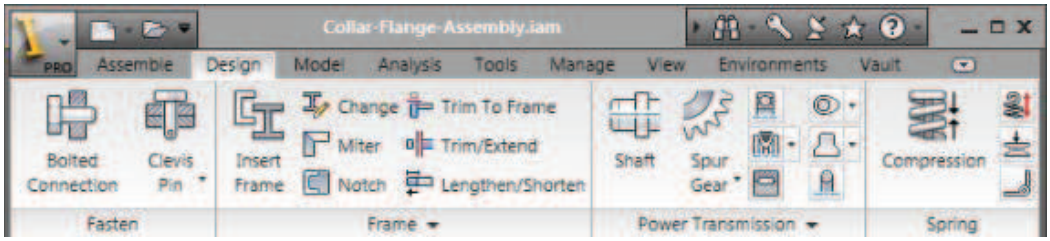

Presentation Tab

When you are in the presentation environment, you use the Presentation tab to create presentation views and tweaks, and to animate geometry in the presentation environment.

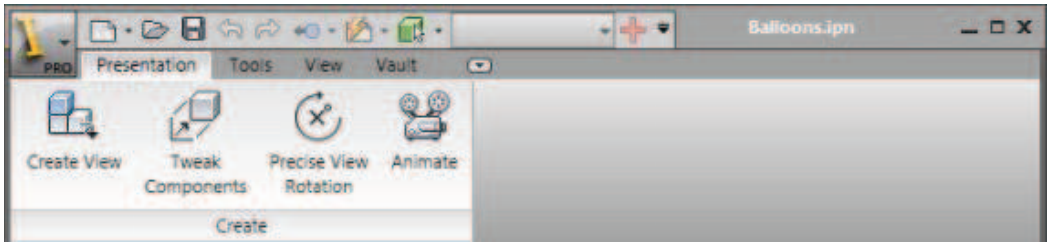

Presentation Browser

The browser displays the presentation views you create followed by the tweaks you use for the explosion. When you expand each tweak, you see the parts included in that tweak. You can also switch the browser mode from Tweak View to Sequence View or Assembly View.

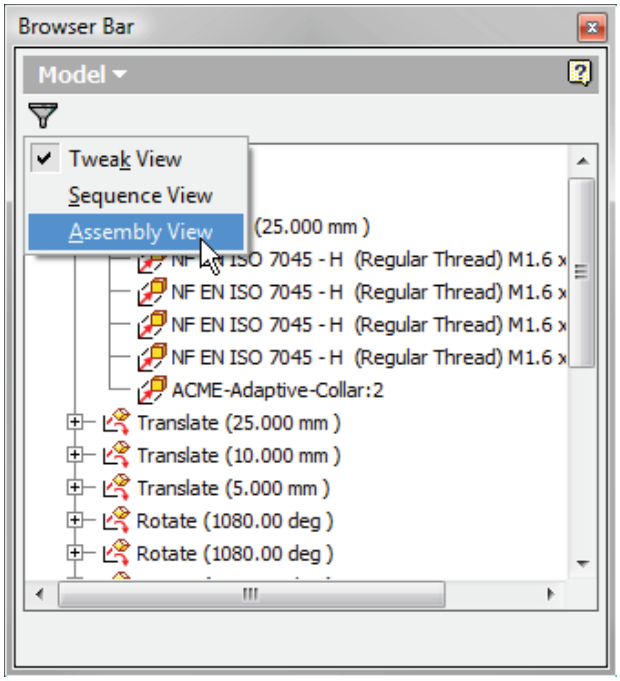

Drawing Environment

In the drawing environment, the browser displays the Drawing Resources folder containing sheet formats, borders, title blocks, and sketched symbols. It also displays each sheet in the drawing along with the views you create for each.

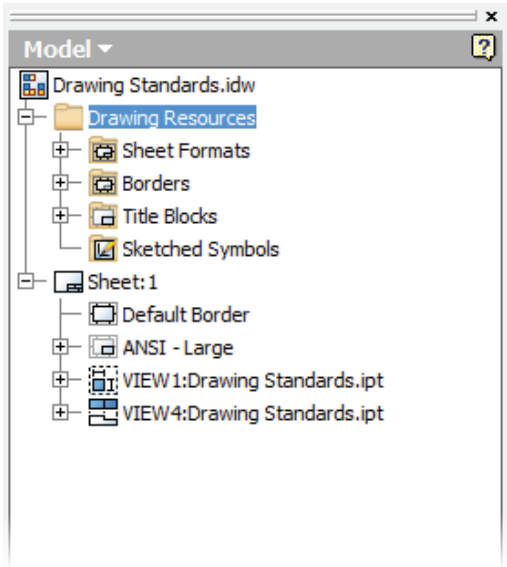

You use the Place Views tab in the drawing environment to create drawing views on the sheet.

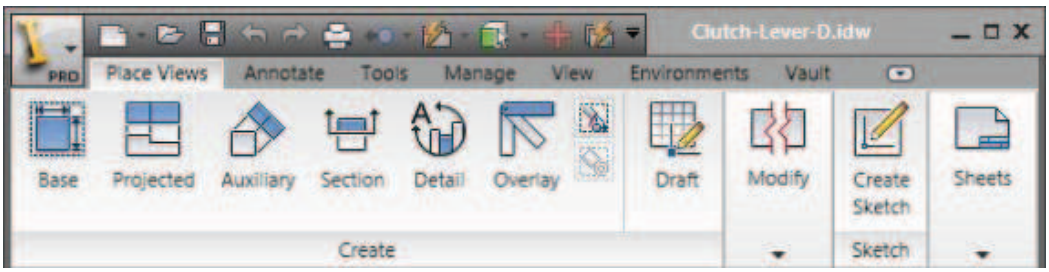

You use the Annotate tab in the drawing environment to add reference dimensions and other annotation objects.

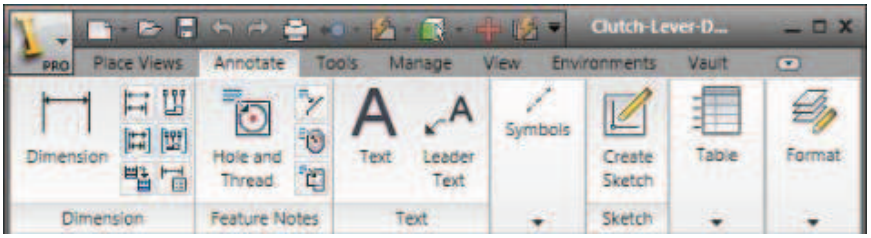

Keyboard Shortcuts

You can use keyboard shortcuts to access and begin tools and commands. For example, you can enter **P** for Place Component, or **N** for Create Component. Entering the keyboard shortcut is the same as clicking the tool on the tabs. When you hover the mouse over a tool on the ribbon, the tooltip will expand to reveal information about the tool. The keyboard shortcut (1) will be listed as shown in the following illustration.

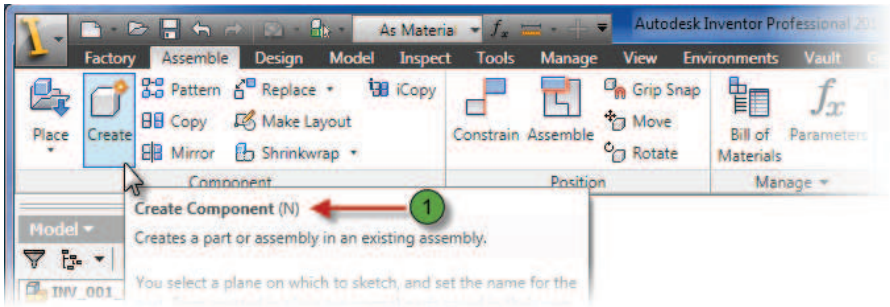

Access Shortcut Keys List

You can access a complete list of the default shortcut keys from the Help menu.

In the Info Center, click the arrow next to the Help icon > Shortcut/Alias Quick Reference

Condensed Ribbon

As you become more familiar with the tools in each environment, you can condense the ribbon by choosing to display tool icons without text. To switch, right-click anywhere on the ribbon and click Ribbon Appearance > Text Off. Clear the check mark to display icon text. In this mode, tools are displayed with icons only resulting in more area for the browser and graphics windows.

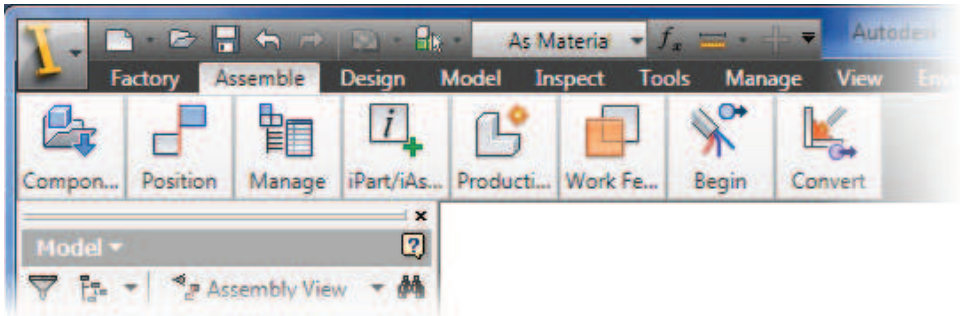

Alternative Ribbon and Browser Positions

In addition to the default positions, you can alter the location of the ribbon or browser by clicking and dragging the horizontal bars near the top of the element, or the title area when the element is floating. Both the ribbon and browser can be placed in a docked position on the left or right side of the screen, or in a floating position anywhere in the graphics window.

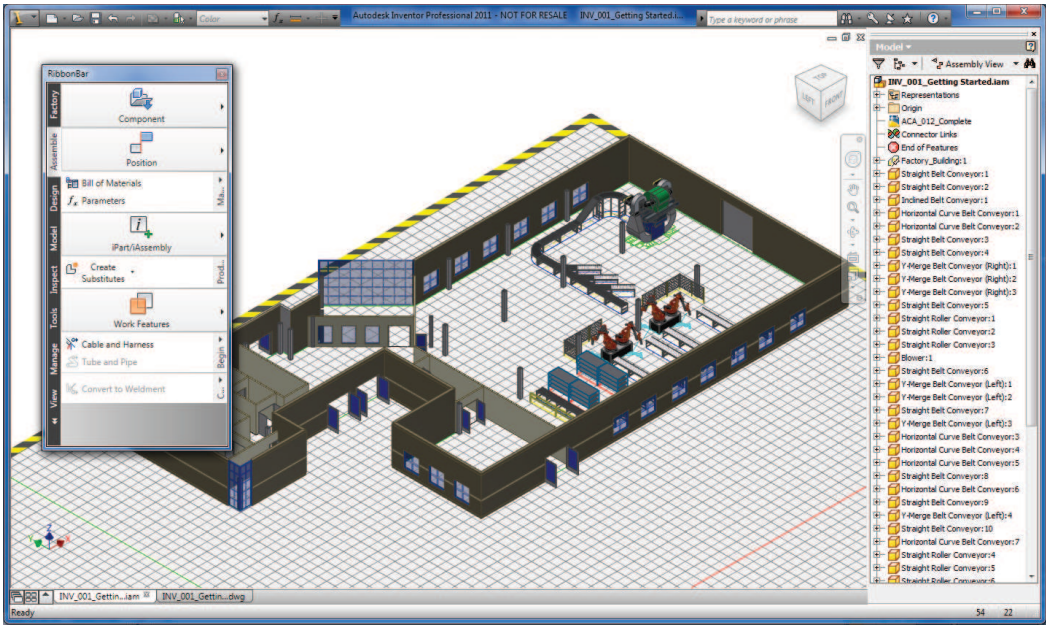

Online Help and Tutorials

Autodesk Inventor offers several types of online help, tutorial references, and other resources to assist in building your skill level. Standard Help files, context-sensitive how-to presentations, Show Me animations, and tutorials are available.

Autodesk Factory Design Suite also offers factory specific help, available on the Factory ribbon. The Factory Design Help is shown in lower image.

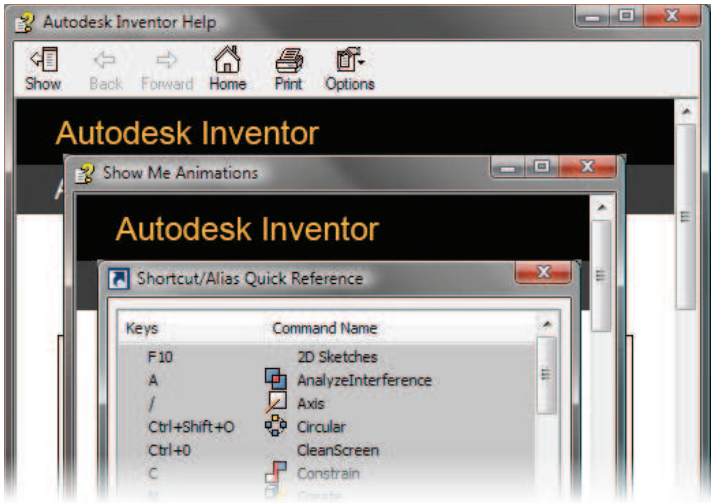

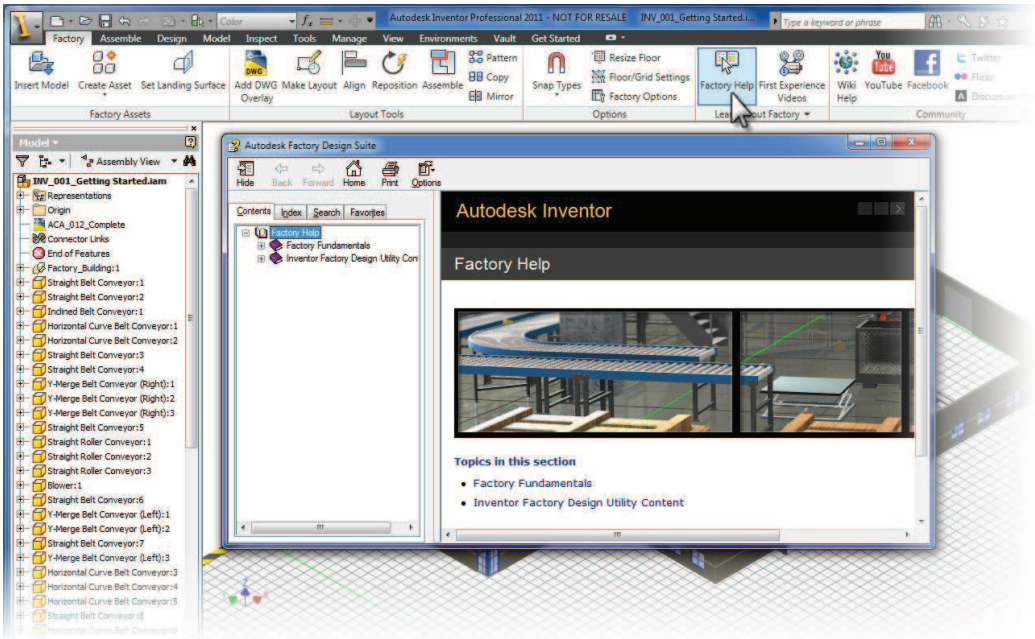

Setting Your User Type

The initial Help screen enables you to specify the user type that most closely matches your situation. The topics that are most relevant to the user type that you select are presented first on the initial help screen. By default, the option to Show Help on startup is enabled. This causes the Inventor Help system to launch each time you start Inventor and create a new file or open an existing file.

To access the Inventor Help System, press F1 or click Help menu > Help Topics.

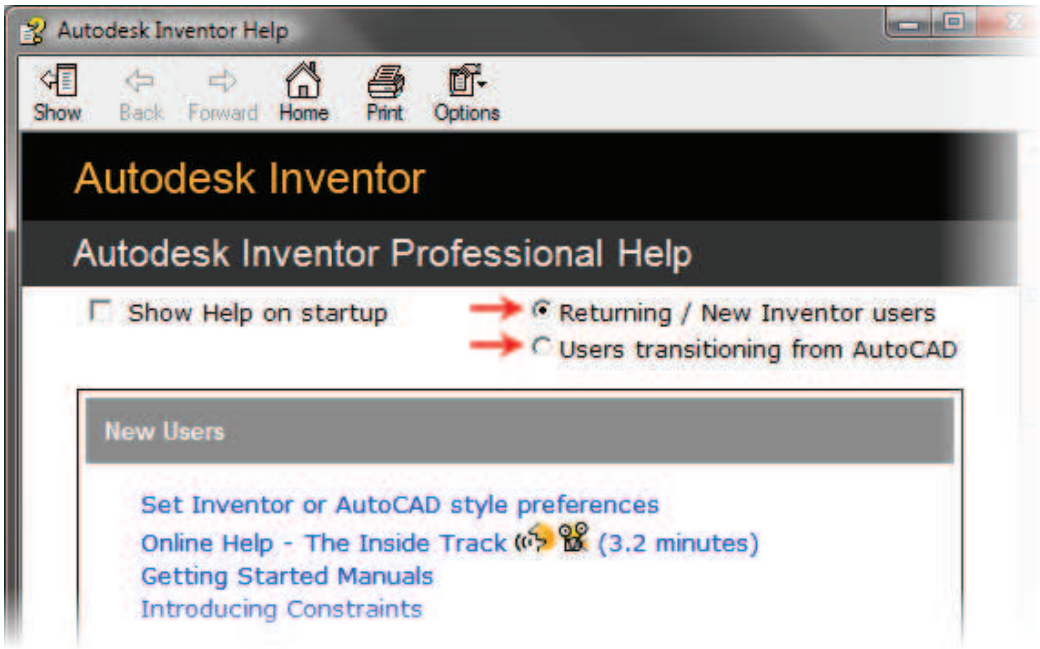

Help for Returning and New Users

Returning and new users can find links to Help information that is most relevant for them.

Help for AutoCAD Users

AutoCAD users can use the Help topics designed specifically for them as they make the transition to Autodesk Inventor.

Shortcut/Alias Quick Reference

The Shortcut/Alias Quick Reference shows all of the default Shortcut/Alias keys along with the command names they execute.

Click Help menu > Shortcut/Alias Quick Reference to access the reference.

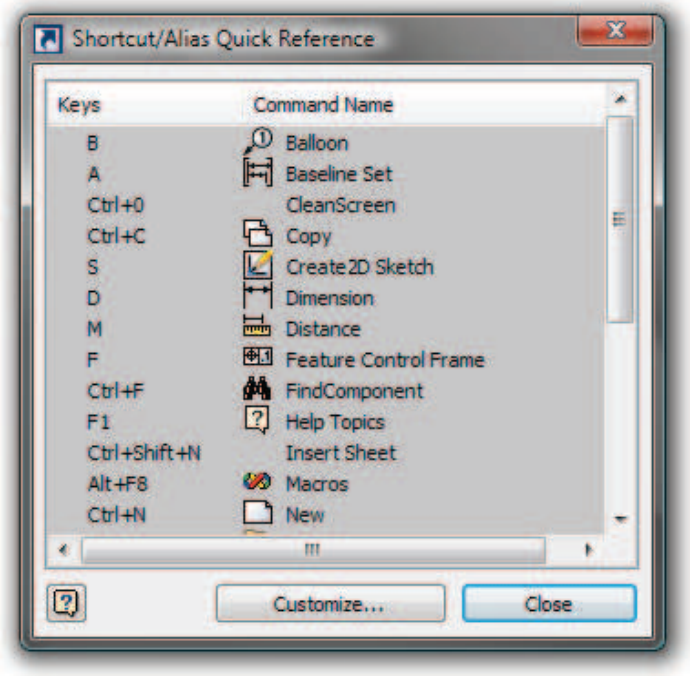

Show Me Animations

The Show Me animations present topic-specific information in animated presentations.

To access the Show Me animations, on the Info Center, click Help > Help Topics and select the Show Me Animations link. In the Show Me Animations dialog box, navigate to the topic of choice and the animation begins automatically.

Inventor Tutorials

There are several tutorials available that cover a range of topics from Level 1 to Level 3. Click the tabs along the top of the page to view the tutorials for each level. On each tab, panels display tutorial titles and descriptions. From the main list of tutorials, select the topic of interest. The tutorials present step-by-step information on performing tasks in Autodesk Inventor.

You access these tutorials by clicking Help menu > Learning Tools > Tutorials, or by clicking Try It Tutorials on the main Help screen.

Factory Design Suite Tutorials

There are several Factory Design tutorials available that cover the initial processes and practices of the Autodesk Factory Design Suite. These tutorials are access on the Factory Ribbon > Learn About Factory Panel > First Experience Videos.

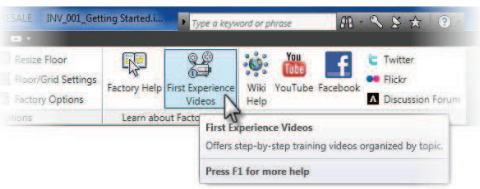

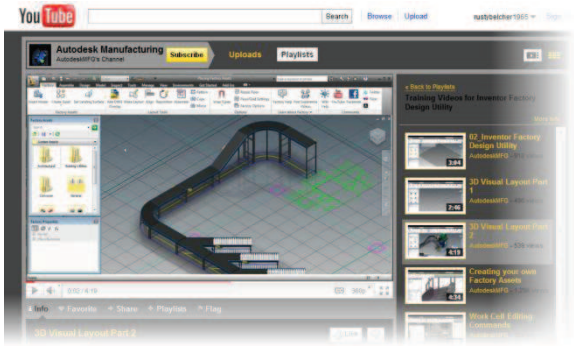

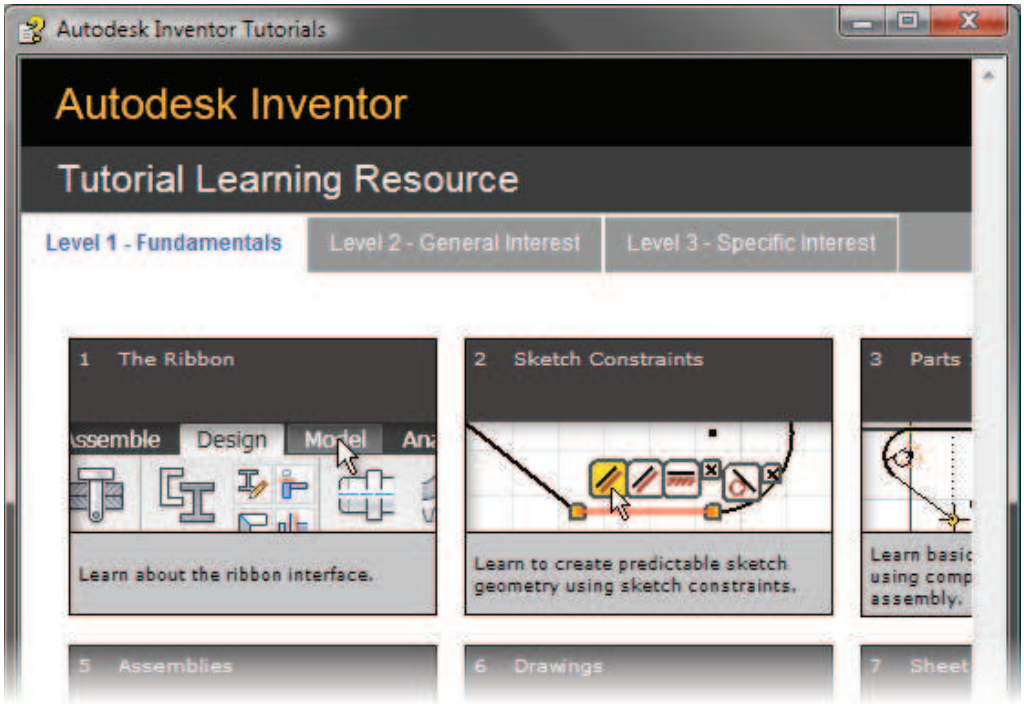

In the following illustration, the Introduction to the Ribbon Interface page of the Autodesk Inventor tutorial is displayed.

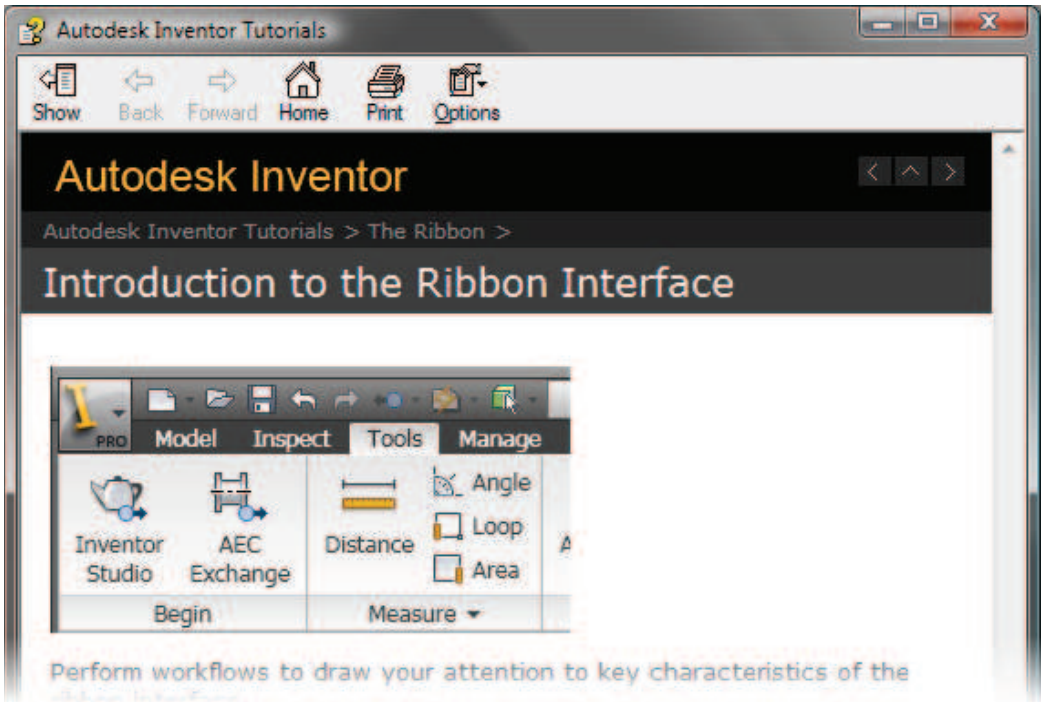

Exercise: Explore the Autodesk Inventor User Interface

In this exercise, you explore the Autodesk Inventor user interface for assembly, part modeling, and drawing environments.

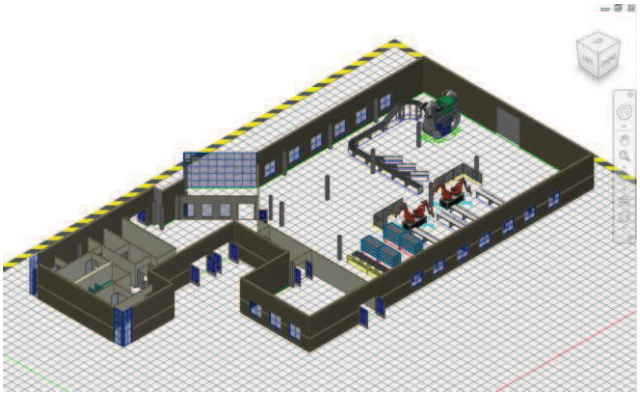

The completed exercise

Exercise Setup

Before you can complete the exercises for the Autodesk Factory Design course, you must activate the Learning Autodesk Factory Design Suite project file.

1. Start Autodesk Inventor. If Autodesk Inventor is already running, close all files.

2. Click Get Started tab > Launch panel > Projects.
   - If Learning Autodesk Factory Design Suite is displayed in the project list, double-click to make it active. A check mark appears next to the active project.
   - If Learning Autodesk Factory Design is not in the list, click **Browse**.
   - Navigate to the installation folder of your student dataset files. By default, this location is *C:\Autodesk Learning\Autodesk Factory Design Suite\Learning.*
   - Double-click **Learning Autodesk Factory Design Suite.ipj.** A check mark appears next to the active project.
   - Click **Done**.

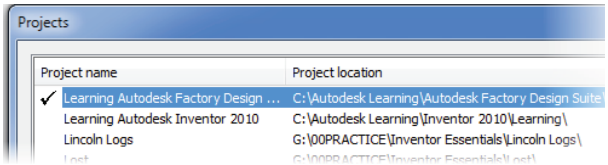

3. End of exercise setup. Continue to the exercise.

Explore the Autodesk Inventor User Interface

1. Open **Inv-001_Getting_Started.iam**.
2. Because this is an assembly file, notice the specific assembly modeling tools on the ribbon. In the browser, notice the appearance of both assembly files (1) and part files (2). When assembly files are referenced in other assemblies, they are commonly referred to as subassemblies.

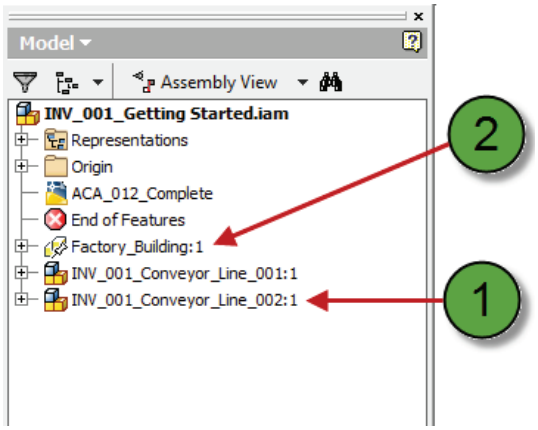

3. In the browser, expand the **INV_001_Conveyor_Line:1** subassembly to view its referenced parts (1) and assembly constraints (2).

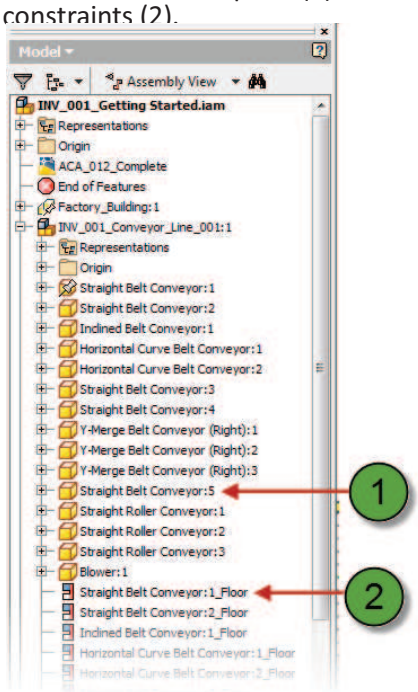

4. To activate a part in the context of the assembly:
   - In the browser, collapse the **INV_001_Conveyor_Line:1** subassembly node.
   - Double-click **INV_001_Conveyor_Line:2**
   - Notice the change in appearance in the browser, graphics window, and ribbon. In the browser, the area listing inactive components and subassemblies has a gray background. The ribbon changes to display tools specific to part modeling, and in the graphics window, all inactive components become transparent leaving only the active part opaque in color.

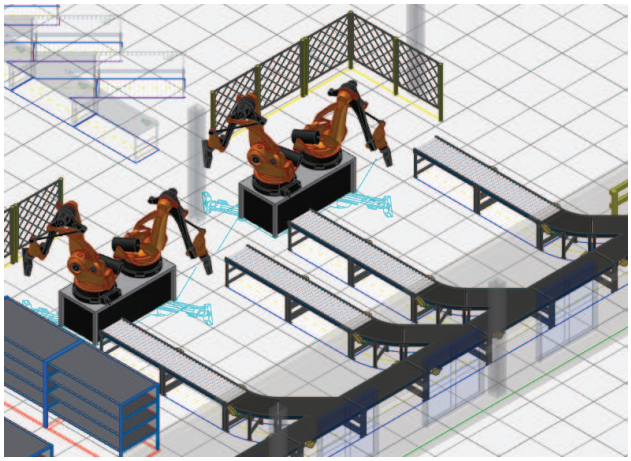

5. To return to the assembly, on the ribbon, click Return. **Note:** You could also double-click the assembly in the browser to return.

6. To open a part in its own window:
   - In the browser, expand **INV_Conveyor_Line_001** assembly and right-click the Straight Belt Conveyor:1 part. Click Open. The part opens in a separate window and any changes made to the part are reflected in the assembly.

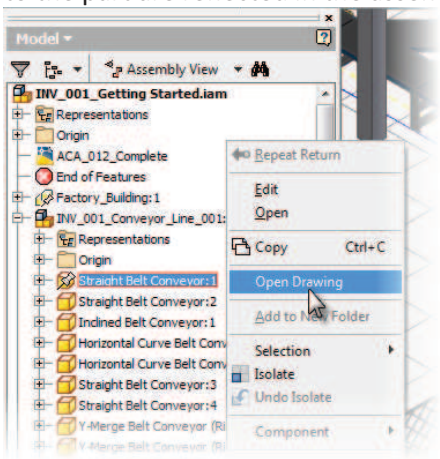

7. To activate the sketch environment:
   - In the browser, expand the Rail1 part feature.
   - Double-click **Sketch1**.

   The browser background color changes to indicate the active sketch, the part features are rolled-back and the graphics window displays the sketch geometry.

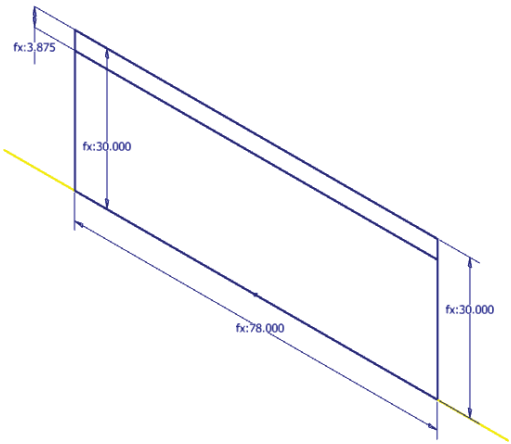

8. To exit the sketch, on the ribbon, click **Finish Sketch**.
9. Close the part file and return to the assembly. If you are prompted to save changes, click **No**.
10. To open an Inventor drawing file:
    - On the Quick Access toolbar, click Open.
    - In the Open dialog box, select **INV_001_Getting_Started.dwg** and click Open.
    - The ribbon updates to show drawing related tasks and tools.

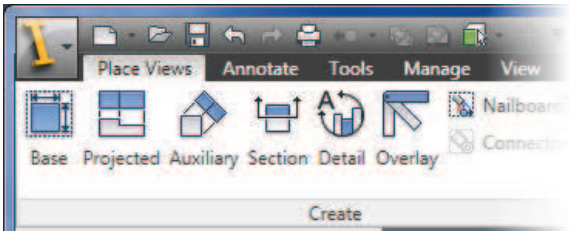

11. In the browser, expand the Drawing Resources node and View1: **INV_Getting Started.iam** node to reveal the nested resources, views, and assembly references.

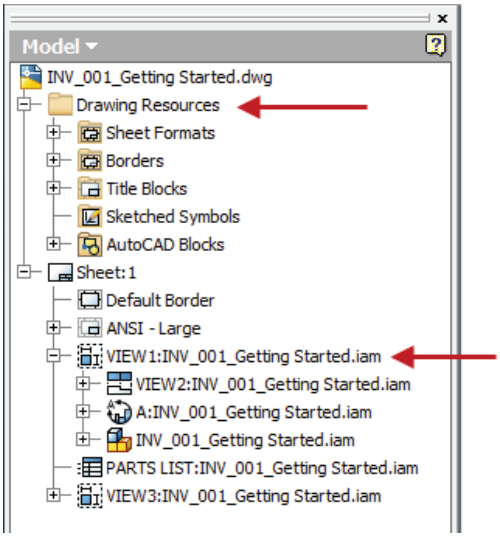

12. To explore the Help System resources:
    - Press F1.
    - If you are an experienced AutoCAD user, click the option for Users Transitioning from AutoCAD and explore the Help resources that are tailored for these users.
    - If you are new to Inventor and do not have AutoCAD experience, click the option for Returning / New Inventor Users and explore the Help resources that are tailored for these users.
    - Return to the Factory Assembly and review the Factory Specific Help available on the Factory Ribbon.
13. Close the Help windows.
14. Close all files. Do not save.

Lesson: View Manipulation

This lesson describes the use of the various view manipulation tools in the modeling and drawing environments.

You view all aspects of your 3D geometry by navigating around in 3D space. The view manipulation tools enable you to quickly perform these tasks in a manner that is intuitive and efficient.

In the following illustration, a constrained orbit is used to rotate the assembly and change the view orientation. The ViewCube, in the upper right corner of the graphics window, is shown with the compass displayed. The ViewCube rotates with the model and aids in the orientation of the model.

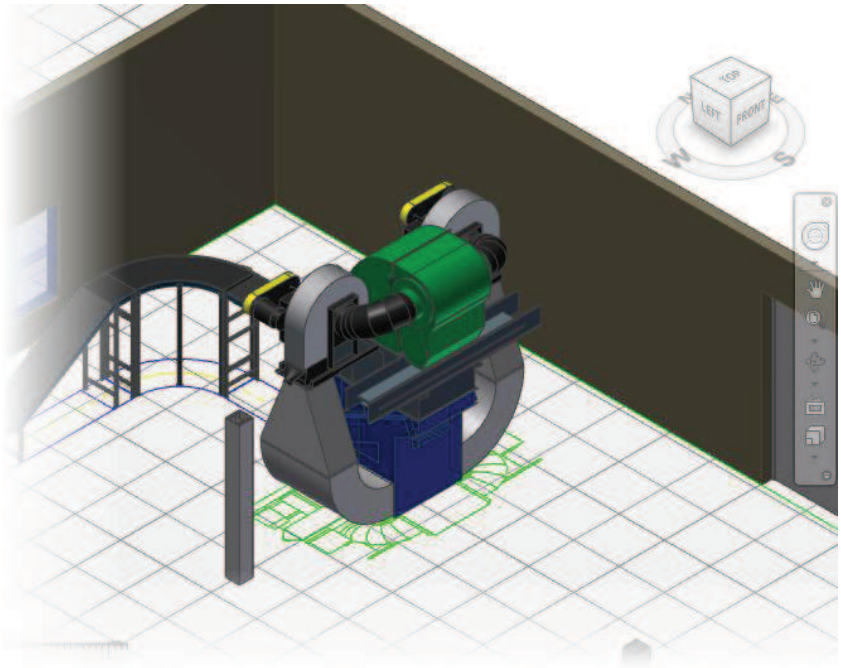

Objectives

After completing this lesson, you will be able to:

- Identify the tools that are available in the graphics window.
- Explain the behavior of the Free Orbit and Constrained Orbit tools.
- Explain the ViewCube options and how to access them.
- Describe how the ViewCube can be used to view part and assembly models and how to customize its appearance and behavior options.
- Explain the steps to define and restore the home view.
- Describe how to use various tools to restore previous views.

About the Graphics Window

Your 3D part and assembly models, presentations, and drawings are displayed in the graphics window. Many tools are available to manipulate the view and appearance of your model in the graphics window.

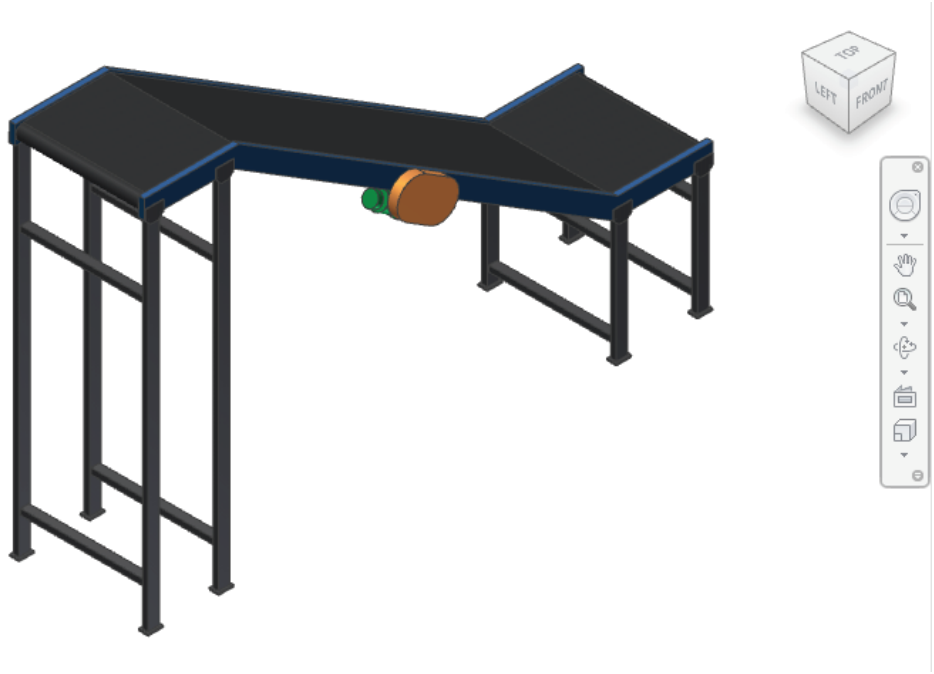

Viewing Tools

View manipulation is a key 2D drawing and 3D modeling skill. You are often required to view different areas of a design, and changing your view can help you visualize solutions for the current task. Many of the view manipulation tools are common to all environments.

The following illustration shows the view manipulation tools that are available on the Navigation bar.

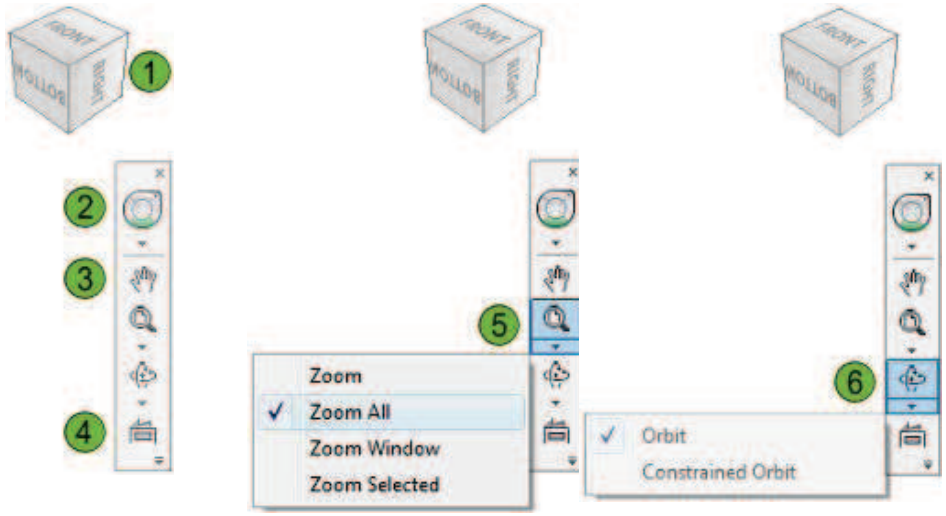

Navigation Bar **Zoom Options** **Orbit Options**

1. ViewCube
2. SteeringWheel
3. Pan
4. View Face
5. Zoom All
6. Free Orbit

You have different view manipulation tools available to you depending on how you want to change where you are viewing and to what magnification. To efficiently change your view to see exactly what you want or need to see, you need to know what view manipulation tools are available to you and how to use them.

Icon	View Tool	Description
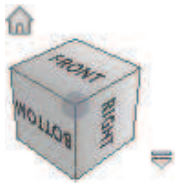	**ViewCube**	In the 3D environment the ViewCube tool displays as a default in the graphics window, enabling you to reorient your view of the model. In the 2D environment the ViewCube enables the definition of view orientations for a drawing view.
	**Free Orbit**	Enables you to freely rotate the view of your model on screen.

Icon	View Tool	Description
	Constrained Orbit	Constrained Orbit enables you to rotate around the vertical axis of a model in a manner similar to the rotation of a turntable.
	SteeringWheel	The SteeringWheel tool is designed to be a common tool for multiple Autodesk products. The SteeringWheel tool was implemented to provide many different levels and types of control over model and drawing navigation.

You can use the mouse to accomplish most pan and zoom tasks.

- Roll the mouse wheel to zoom at the cursor location.
- Click and drag the mouse wheel to pan.
- Shift+click and drag the mouse wheel to free orbit.
- Double-click the mouse wheel to zoom all.

Display Modes

This area of the toolbar displays appearance-related tools for controlling the appearance of your model. Select a render style from the list to change the color and texture of your model.

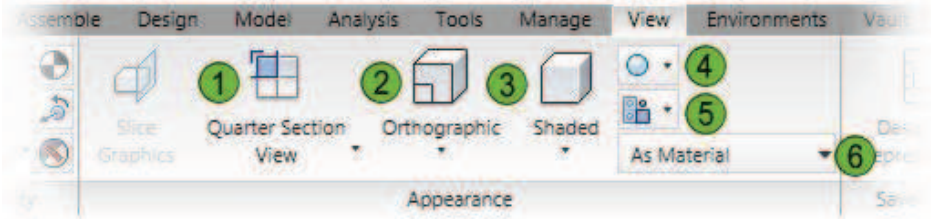

1. Toggle the section views which graphically slice portions of an assembly so that you can visualize other features.
2. Toggle between Orthographic and Perspective display modes.
3. Toggle between Shaded, Shaded with Hidden Edge and Wireframe displays.
4. Toggle between No Shadow, Ground Shadow, and X-Ray Shadow display modes.
5. In an assembly file, toggle between Transparency On and Transparency Off display modes.
6. Select a color/material to assign to a component.

3D Indicator

While using the assembly, part modeling, and presentation environments, the 3D Indicator is displayed in the lower-left area of the graphics window. The Indicator displays your current view orientation in relation to the X, Y, and Z axes of the coordinate system.

The 3D Indicator is positioned below and to the left of the assembly in this illustration.

- **Red:** X-axis
- **Green:** Y-axis
- **Blue:** Z-axis

Orbit Tools

You have two options to rotate the views of models and assemblies. The Free Orbit tool is used to rotate the model freely in screen space, while the Constrained Orbit tool is used to rotate the model about axes in model space.

In the following illustration, the functionality of the Constrained Orbit tool is compared to that of a globe. As you rotate a globe about the north-south axis, the angle at which you view the globe does not change. The Constrained Orbit tool is similar in behavior.

Access

Free Orbit

Navigation Bar: **Free Orbit**

Ribbon: **View tab > Navigate panel**

Access

Constrained Orbit

Navigation Bar: **Constrained Orbit**

Ribbon: **View tab > Navigate panel**

Free Orbit

The Free Orbit tool enables you to dynamically change your view of the model. It is important to remember that the model does not move, you change your viewing position with the Rotate tool.

The following illustration outlines the rotation modes available. The cursor provides feedback on the rotation mode available. You click and drag to rotate the view and you can set the center of rotation by clicking a location on the model.

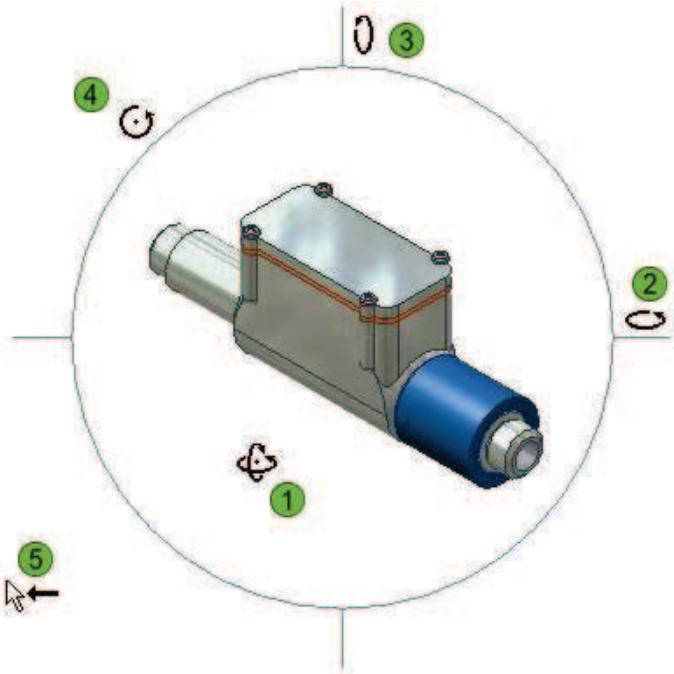

1. Click and drag here to rotate the view about all axes.
2. Click and drag here to rotate the view about a vertical axis.
3. Click and drag here to rotate the view about a horizontal axis.
4. Click and drag here to rotate the view about an axis normal to the screen.
5. Position and click here to exit.

Axis Orbiting with Free Orbit

The illustrations below display the behavior of the Free Orbit tool. When the model view is orbited using the horizontal cross hairs, the model rotates about an imaginary vertical axis based on the view. The model does not stay in the same view orientation. When the view is orbited without the use of the cross hairs, the rotation is about the center of the graphics area, or the center as assigned by the SteeringWheel.

In the following example, using the Free Orbit enables you to view the top and bottom of the assembly as it is orbited.

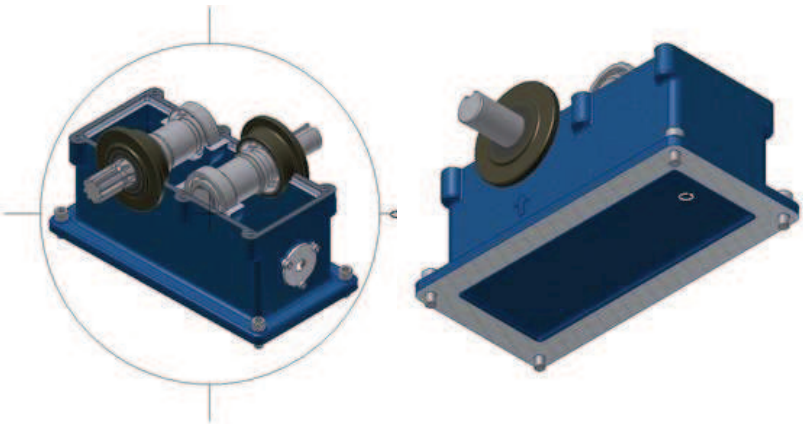

Axis Orbiting with Constrained Orbit

The Constrained Orbit tool places the axis of rotation on the vertical axis of the part or assembly. This functionality enables users to orbit around the vertical axis of their models as they would on a turntable.

In the following illustrations, the Constrained Orbit tool is started. The orbit starts from the right horizontal cross hair. As the assembly is orbited, you can see the sides of the assembly, but your view orientation remains the same.

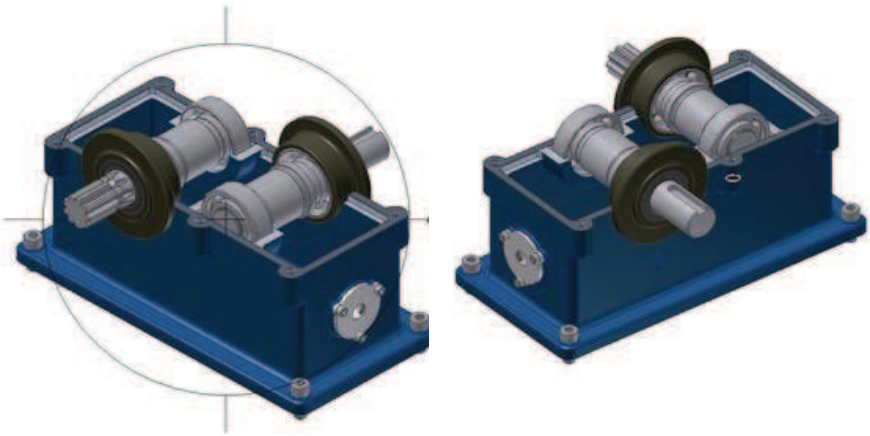

About the ViewCube

The ViewCube tool displays by default in the graphics window. The ViewCube enables you to be more efficient because it is accessible at all times, and provides intuitive access to multiple view orientations.

In the following illustration, the front view of the assembly is restored by clicking Front on the ViewCube.

Definition of the ViewCube

The ViewCube is a view manipulation tool that enables you to efficiently and intuitively change the viewing angle of your parts and assemblies. The ViewCube uses faces, edges, and corners as selection options to define viewing angles.

ViewCube Example

In the following illustration, the view of the monitor arm assembly is changed from the current isometric view (1) to an angle view between the top and front views (3). The new view orientation
was obtained by selecting the ViewCube edge (2) between the Top and Front panels on the ViewCube.

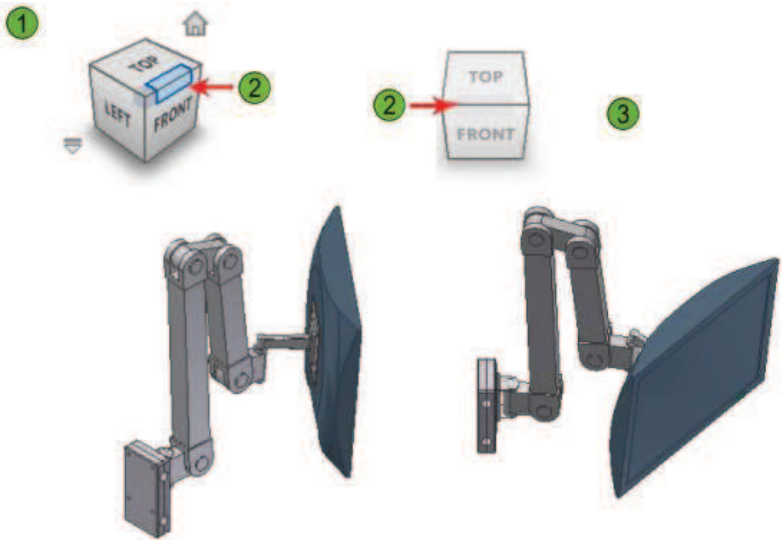

Using the ViewCube

You can access the ViewCube tools by selecting the face, edge, or corner of the ViewCube. Each face, edge, and corner of the ViewCube represents a different view orientation that corresponds to the model. The model rotates to the selected view orientation when the ViewCube is clicked.

In the following illustration, the ViewCube is used to reorient the view of the assembly.

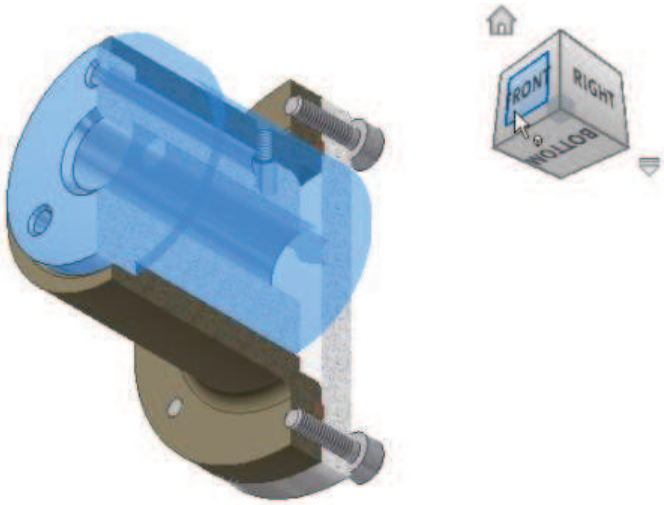

Access

ViewCube

Navigation Bar: **ViewCube**

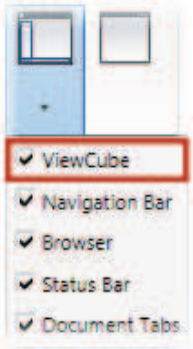

Ribbon: **View tab > Windows panel > Toggle Visibility of the User Interface Elements > ViewCube**

Access

ViewCube Options

Ribbon: **Tools tab > Application Options > ViewCube > Options**
Shortcut: **Right-click the ViewCube > Options**

Introduction to ViewCube Options

The ViewCube is displayed in the upper right corner of the graphics area of a new window by default. However, there are many options associated with the ViewCube that enable you to control both its appearance and behavior.

ViewCube Display Options

The following options control the display and appearance of the ViewCube.

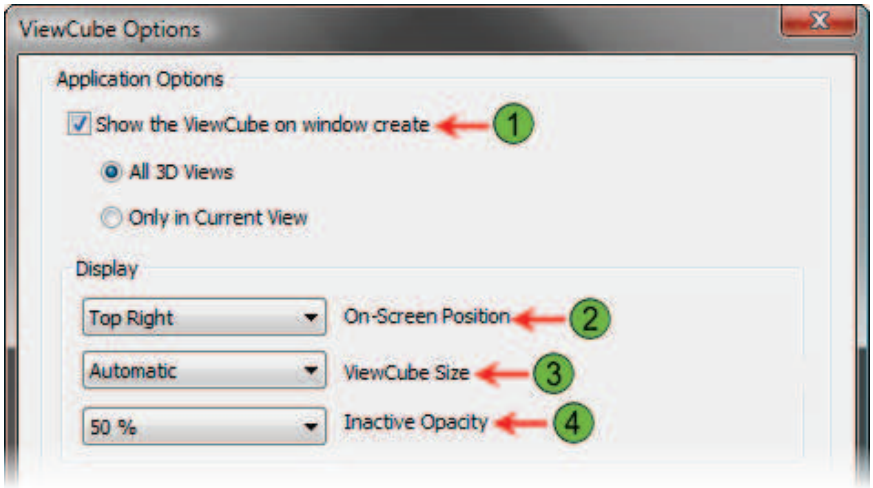

1. Use this option to display the ViewCube. To hide the ViewCube, clear the check mark in the box next to the Show the ViewCube on Window Create option. When a check is in the box for the ViewCube option, you can choose to display the ViewCube in all 3D views or only in the current view window.
2. Use this option to place the ViewCube in a corner of the graphics area. Options include: Top Right, Bottom Right, Top Left, and Bottom Left. The default location is Top Right.
3. Use this option to set the ViewCube size. Options include: Small, Normal, or Large. The default setting is Normal.
4. Use this option to control the ViewCube opacity. When the cursor is near the ViewCube, the ViewCube is fully opaque. When the cursor is away from the ViewCube, the opacity of ViewCube is reduced. Options include: 0%, 25%, 50%, 75%, and 100%. The default setting is 50%.

ViewCube Behavior Options

The following options control the behavior of the ViewCube.

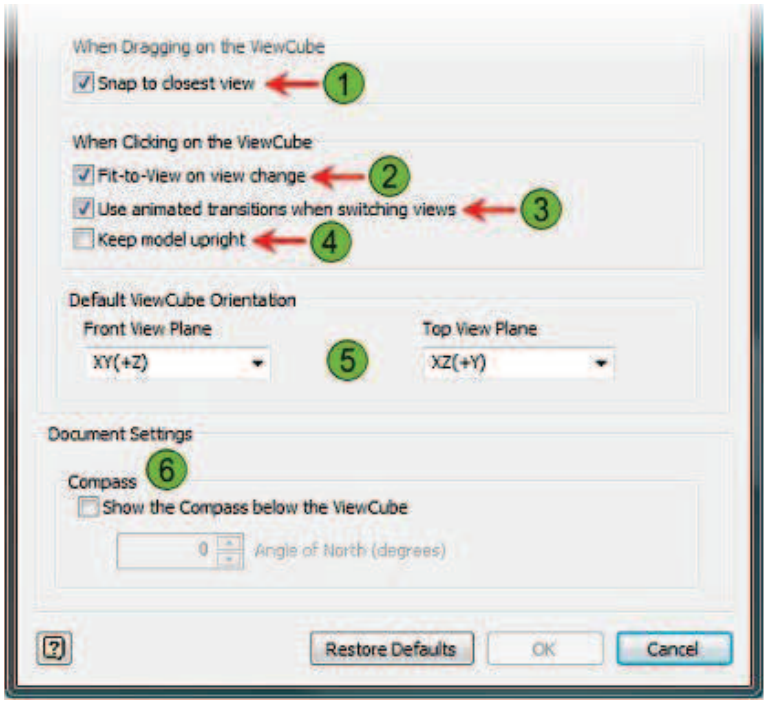

1. Use this option to snap the ViewCube to a common view position when dragging the ViewCube through different view orientations.
2. When selecting a new view orientation using the ViewCube, use this option to fit the new view to the screen.
3. Use this option to create smooth transitions from the current view to the selected view.
4. Use this option to apply additional calculations for view orientation.
5. Use this option to set the default orientation of the ViewCube.
6. Use this option to display a compass with the ViewCube.

Procedure: Using the ViewCube to View Models

The following steps describe using the ViewCube to change the view orientation of your models and assemblies.

1. Select the panel on the ViewCube to change the view orientation.

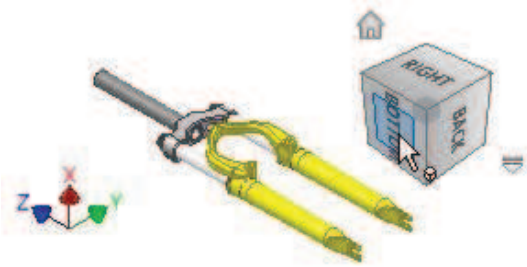

2. Select the arrow to rotate the view orientation.

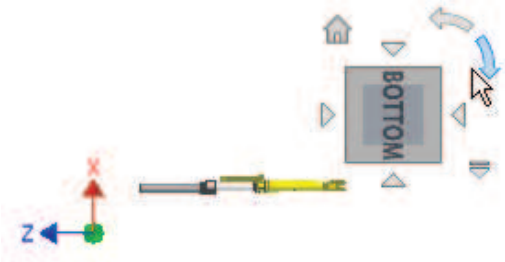

3. Select a corner to change the view orientation to an isometric view of the panel view. In this example, the Bottom view is shown.

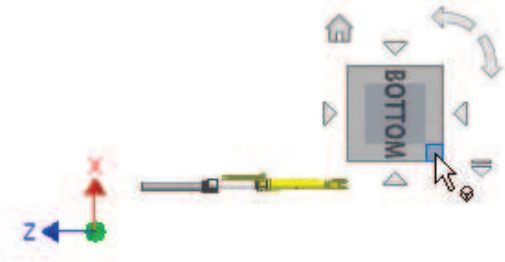

4. An isometric view based on the Bottom view is displayed.

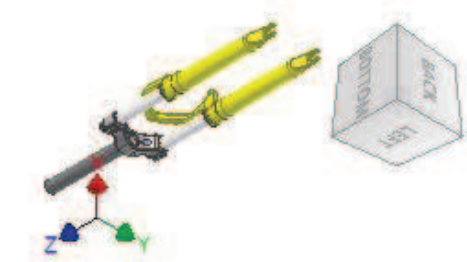

Procedure: Using the ViewCube to Orient Drawing Views

The following steps describe using the ViewCube to set the view orientation of your models and assemblies for drawing views.

1. Start the Base View tool. Click Place Views tab > Create panel > Base View.

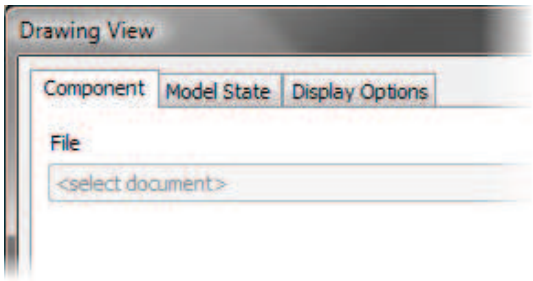

2. Select to change the view orientation.

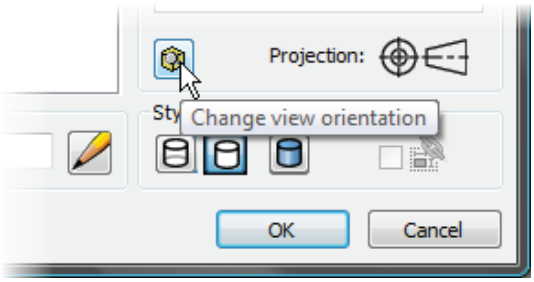

3. Select the desired ViewCube face.

4. If necessary, rotate the model orientation.

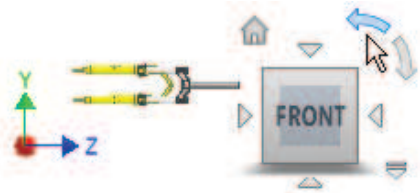

5. Accept the changes and place the view.

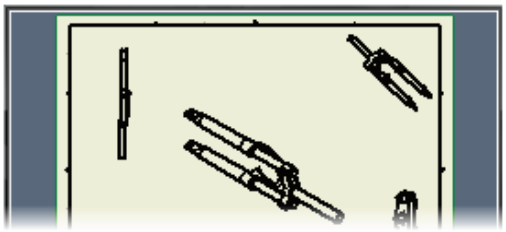

Procedure: Resetting the Current View as Front

The following steps describe resetting the current view orientation to the Front view.

1. Select the panel on the ViewCube to change the view orientation.

2. Right-click the ViewCube, click Set Current View as Front.

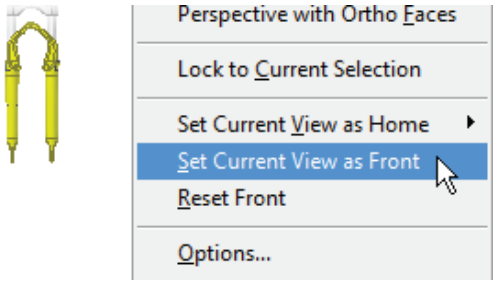

3. The ViewCube updates the orientation of the current view to Front.

Using Home View

Using the Home View tool, you can manipulate your model to any orientation, then specify that view as the home view. In addition to being able to quickly return to that view, the home view is also the view that is shown each time you open the file.

In the following illustrations, the view orientation of the assembly is restored to the home view when the Home View glyph next to the ViewCube is clicked.

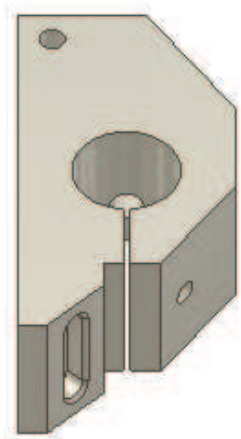

Orthographic View

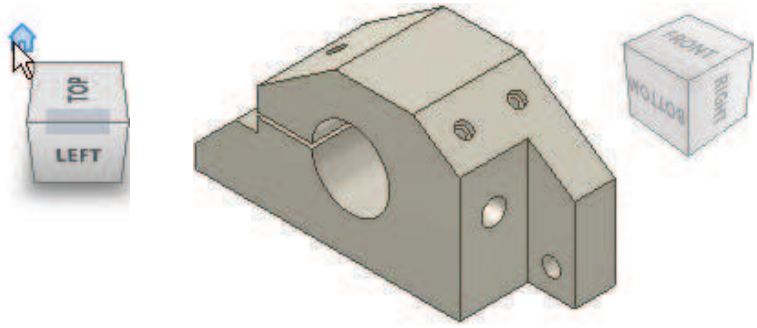

Home View

Access

Home View

The Home View glyph displays as you move your cursor to the ViewCube.

> In all modeling environments, you can quickly return to the home view using either of the following methods.
> - Right-click in the graphics window background. Click Home View.
> - Press the F6 function key.

Home View Options

The following options control the model display when you use the Home View tool.

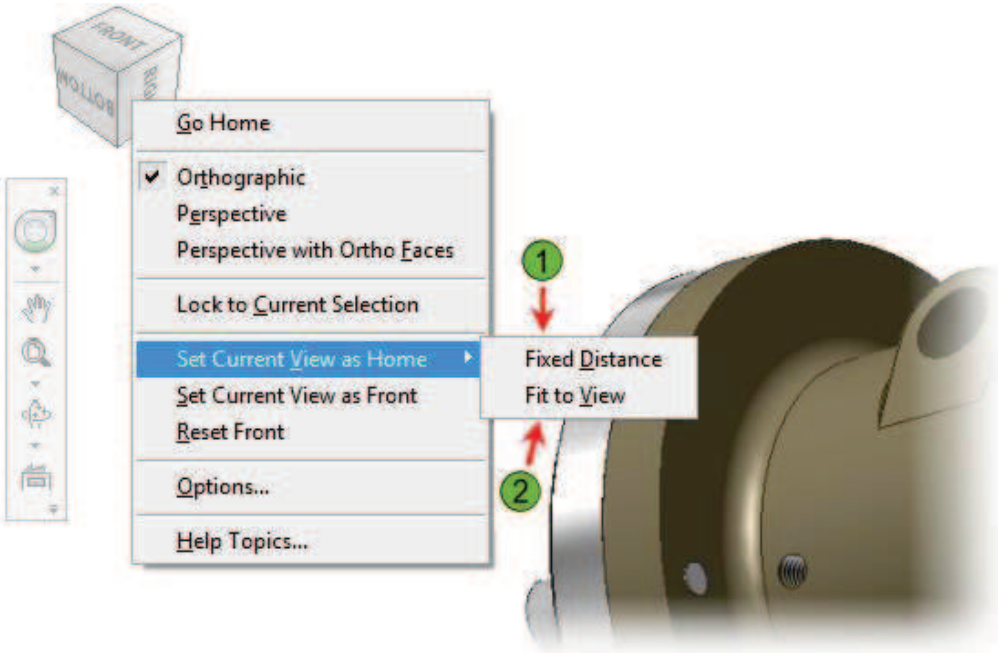

1. Use to define the direction of the view and the zoom magnification.
2. Use to define the direction of the view and automatically assign the zoom magnification as view all.

Procedure: Setting the Home View

The following steps describe how to set any view orientation to the home view.

1. Use any view manipulation tools to orient the model.

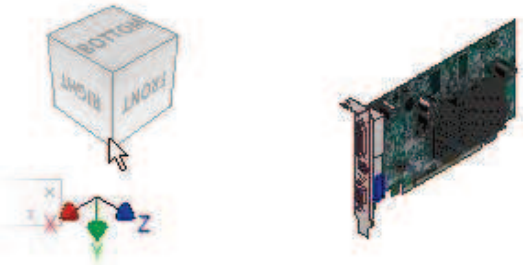

2. With the model in the desired orientation, right-click anywhere in the ViewCube. Click Set Current View as Home, and select Fixed Distance or Fit to View.

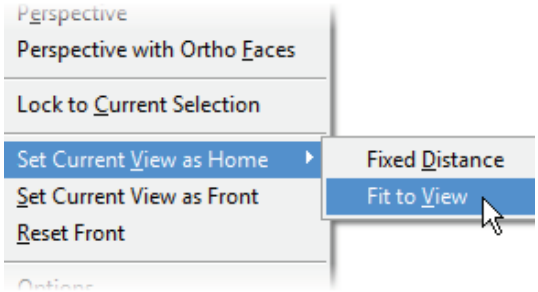

3. With the model in a different orientation, click the Home View glyph.

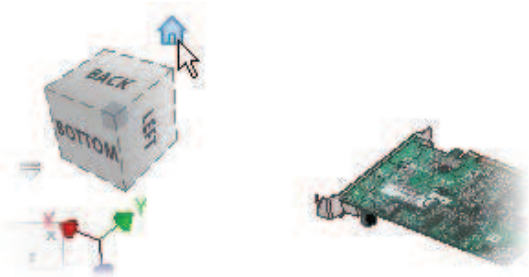

4. The view orientation returns to the specified home view.

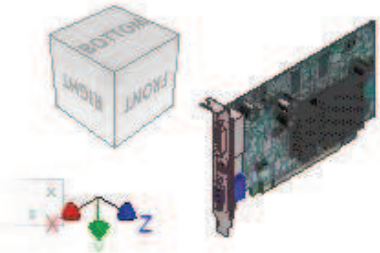

Exercise: Manipulate Your Model Views

In this exercise, you use the ViewCube and Home View tools to navigate through and restore different view orientations.

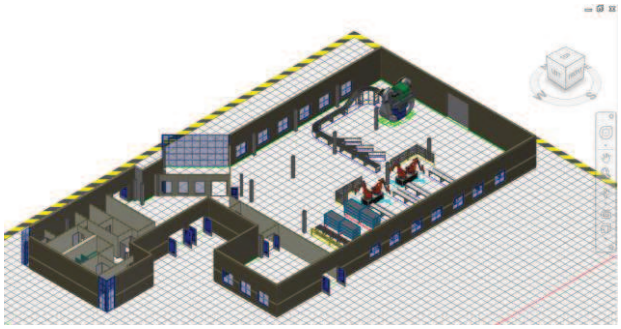

The completed exercise

1. Open **INV_001_Getting Started.iam**.
2. To switch to an isometric view, click the top left corner of the ViewCube.

Your view is displayed as shown.

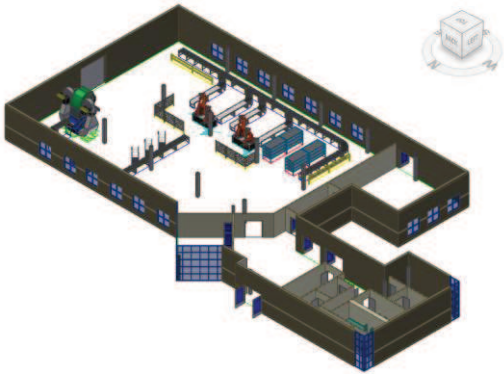

3. To view the current top view, on the ViewCube, click Top.

4. To rotate the view:
   - On the ViewCube, click and hold Top.
   - Drag the cursor toward the upper left corner of the ViewCube until the model is oriented as shown.

5. To return the view orientation to the original Home view:
   - Move the cursor to the ViewCube.
   - When the house image is displayed (1), click the image.

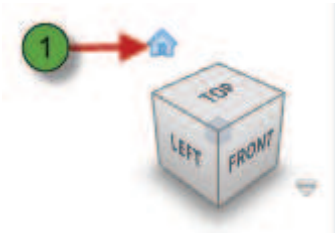

6. To redefine the current view as the Front view:
   - Move the cursor to the ViewCube. Select the Left Face.
   - Right-click the cube. Click **Set Current View as Front**.

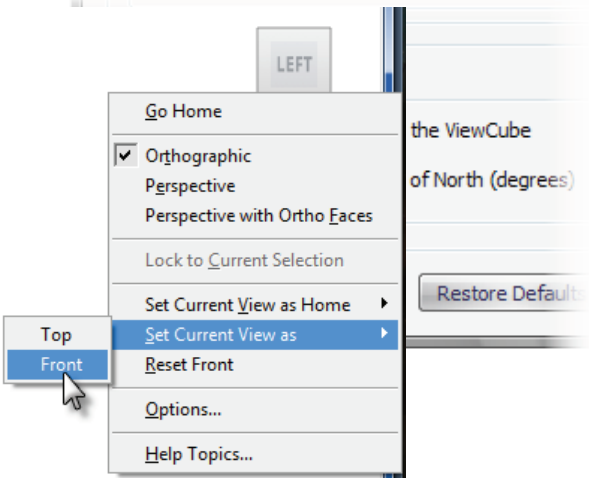

7. To view the model in an isometric view, click the upper left corner of the ViewCube.

8. To redefine the Home view to the current view:
   - Right-click the ViewCube.
   - Click Set Current View as Home > **Fit to View.**

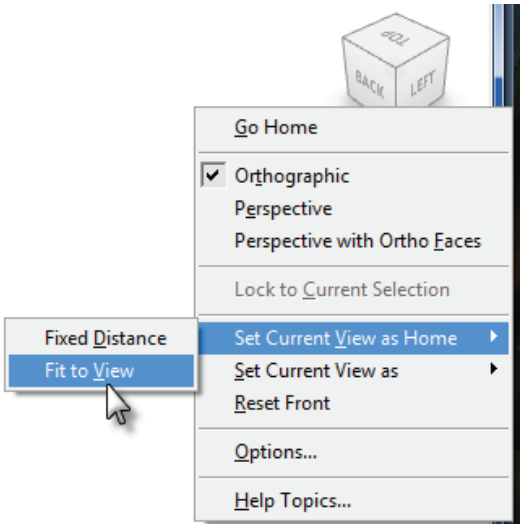

9. To edit the options of the ViewCube:
   - Right-click the ViewCube. Click **Options**.
   - In the ViewCube Options dialog box, under Document Settings, place a check in the box next to the Show the Compass Below the ViewCube option.
   - Click **OK**.

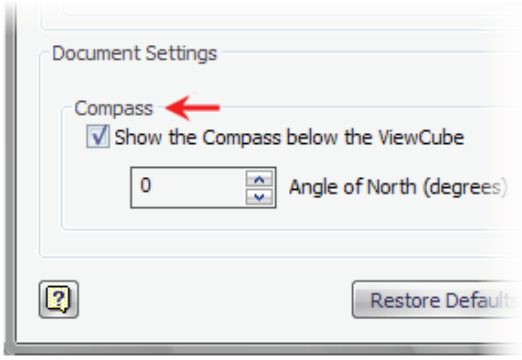

10. To orbit the model:
   - Click View tab > Navigate panel **> Free Orbit**.
   - Click the right quadrant line and drag the cursor to the left until you can see the bottom view of the computer housing.
   - Right-click anywhere in the graphics window. Click **Done**.

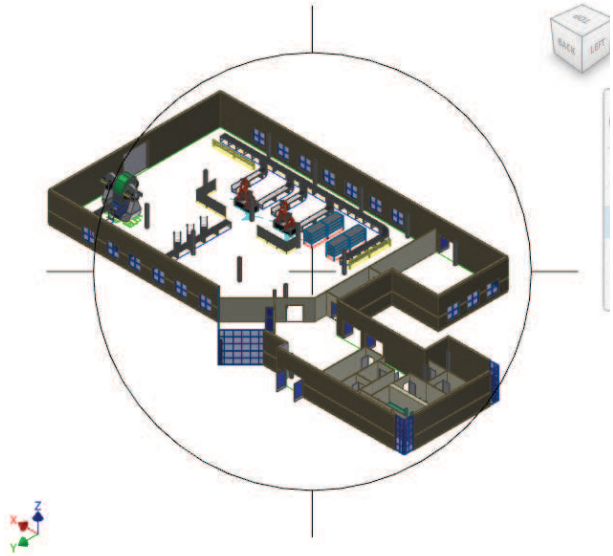

11. On the ViewCube, click **Home View**.
12. To constrain orbit the model:
   - Start the **Constrained Orbit** tool.
   - Click the right quadrant line and drag the cursor to the left.
   - Right-click anywhere in the graphics window. Click **Done**.

   Notice that the orbit pivots about the axis.

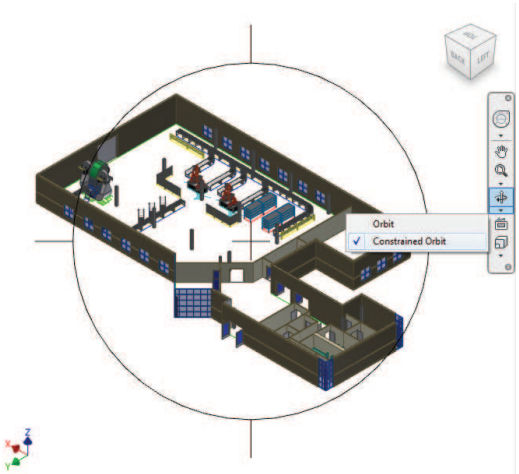

13. To turn off the display of the ViewCube:
   - Click View tab > Windows panel > Toggle Visibility drop-down > ViewCube.
   - Click the option again to turn the ViewCube on.

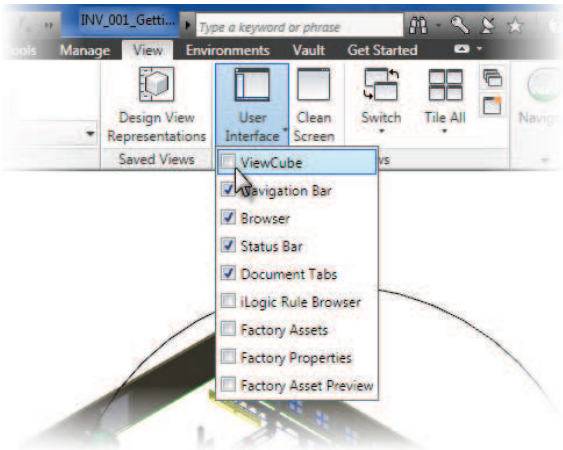

14. To return to your previous view:
   - Press F5.
   - Your previous view is restored.
   - Press F5 again to return the view previous to the current view.

15. To rewind to a specific view:
   - Press **CTRL+W** to activate the SteeringWheel.
   - Click Rewind and hold down the cursor.
   - Drag your cursor over the views filmstrip and release the mouse button over the specific view you want to restore.
   - Continue to use the Rewind tool to restore other views.

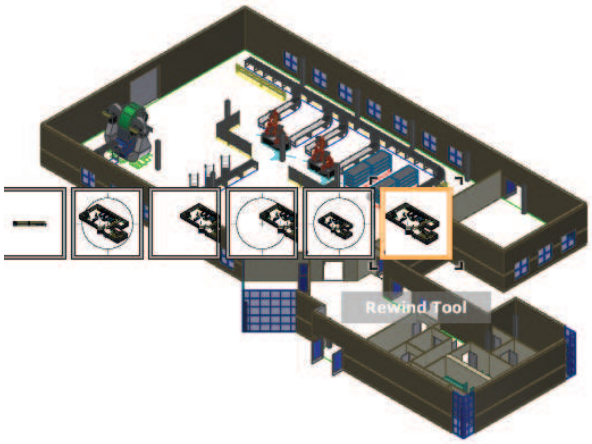

16. Close the SteeringWheel tool.
17. Close all files. Do not save.

Lesson: Designing Parametric Parts

This lesson describes the characteristics of parametric part models and the overall process of their creation.

Familiarity with the basic characteristics of parametric models simplifies the process of learning and applying the tools to create such models.

A parametric part model is shown with dimensions displayed in the following illustration.

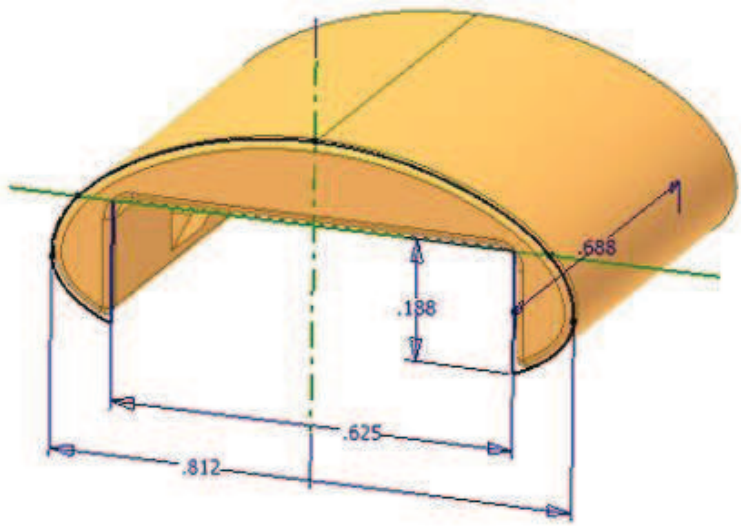

Objectives

After completing this lesson, you will be able to:

- Describe the characteristics of a parametric part model.
- Identify guidelines for capturing design intent.
- State the general workflow for creating parametric part models.
- State the characteristics of the ribbon and browser when in the part environment.
- Create a basic parametric part.

About Parametric Part Models

You can create and edit 3D geometry using parametrics. Parametrics use geometric and dimensional constraints to precisely control the shape and size of a 3D model.

A typical parametric part is shown in the following illustration, consisting of both 2D sketch geometry with dimensional constraints and the resulting 3D solid geometry.

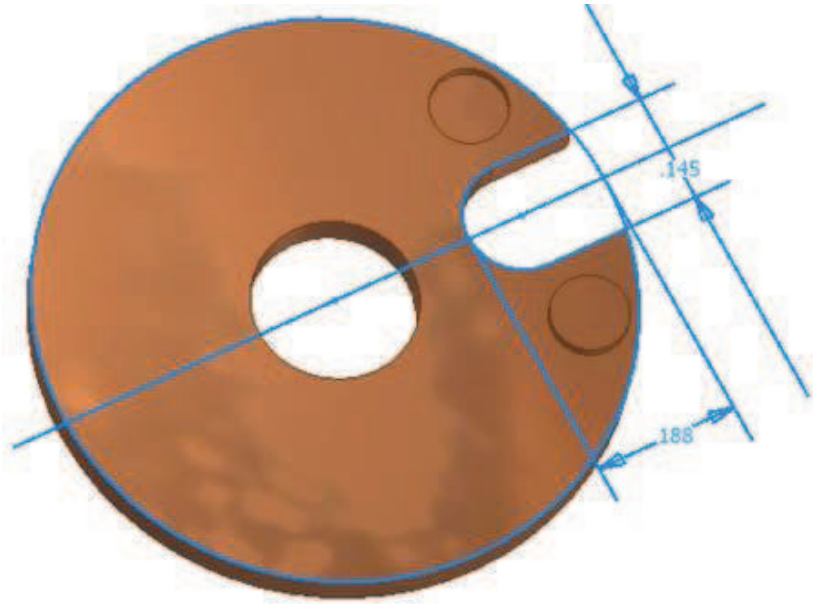

Parametric Part Models

A parametric model is a 3D model that is controlled and driven by geometric relationships and dimensional values. You typically create parametric models from a combination of 2D sketches and 3D features. With a parametric part model, you can change a value of a feature and the part model is adjusted according to that value and any existing geometric constraints.

Sketched Features

Sketched features are features that add or remove material and are typically based on a 2D closed loop sketch. The sketch can be composed of lines, circles, and arcs.

Sketched features are shown in the following illustrations. After the sketch is used by a feature, it is considered consumed by the feature and is displayed nested below that feature in the browser.

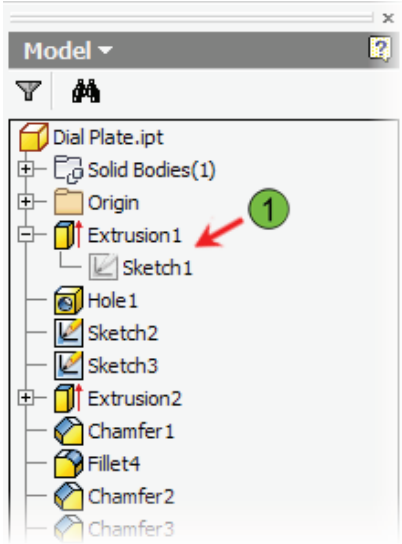

Placed Features

While sketched features start from a sketch, placed features have an internally defined shape for adding or removing material. You need to determine only where and at what size the feature should be created. Holes and fillets are two commonly used placed features.

Placed features are shown in the following illustration by the Fillet4 and Chamfer2 highlights.

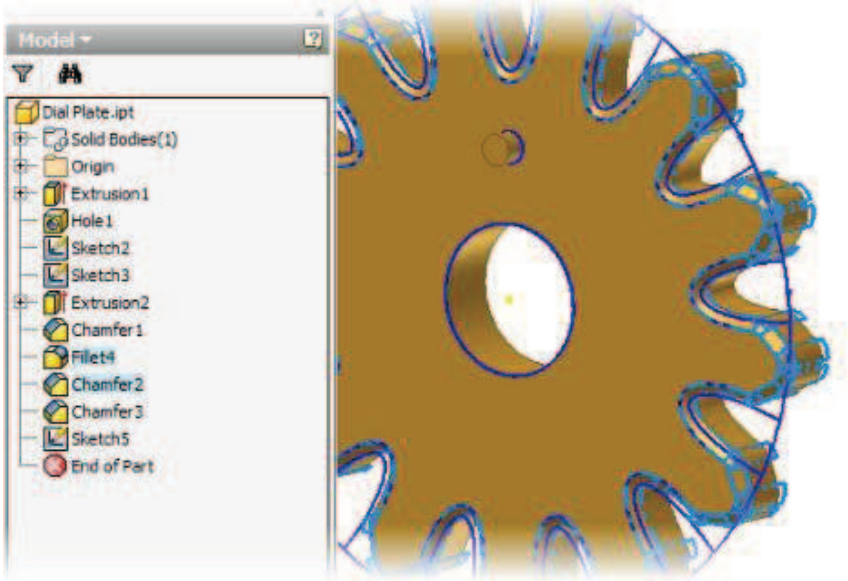

Base Features

The first feature that you create is typically a sketched feature. This first feature is also referred to as the base feature. All subsequent features either add material to or remove material from the part model.

Extrusion1 represents the base feature of the part in the following illustration.

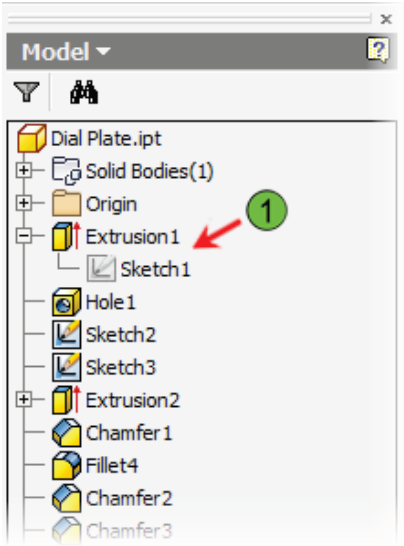

1 Base sketch and base feature

Progression of a Parametric Model

A parametric model progresses through the stages of its creation in the following illustrations. The model is transformed after the size of the base feature is increased upon inclusion of sketched and placed features.

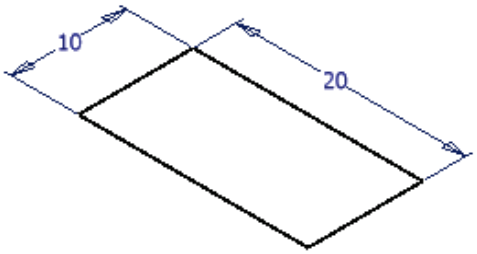

Initial sketch is created

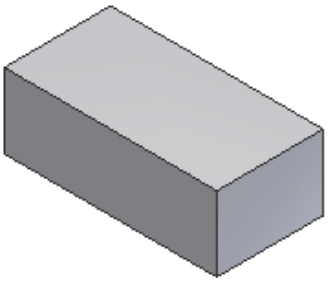

Base feature is created

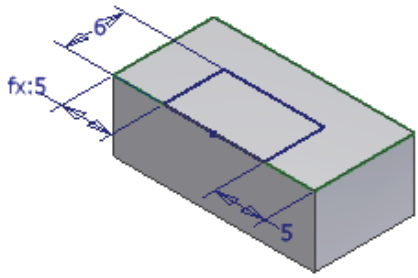

Secondary sketch is added

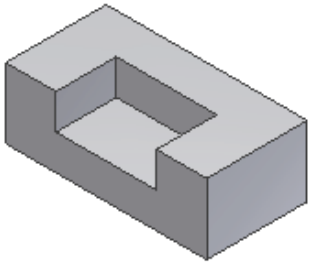

Secondary feature is created from secondary sketch

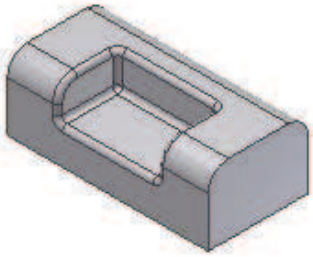

Fillets (placed features) are added

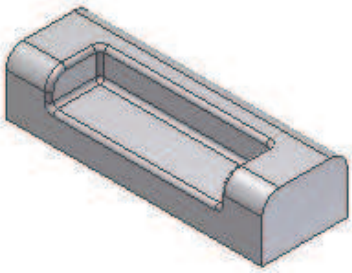

Length is changed in initial sketch, causing part to update

Capturing Design Intent

Regardless of the type of design that you are creating, you should always aim to capture the intent of the design as early in the process as possible. It is common for a design to change as a result of inherent design problems or future revisions. The ability to capture design intent makes these potential changes much easier to implement.

Design intent has been captured in the following illustration by using a simple formula (2) to calculate the outside diameter of the part based on the inside diameter (1).

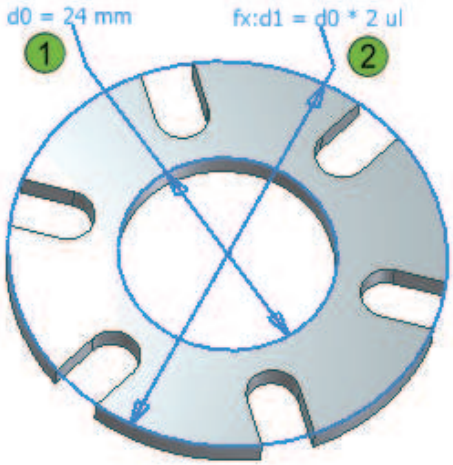

About Capturing Design Intent

When you capture your design intent, you add intelligence to your design. This intelligence can exist in several different forms. It can reside in a simple geometric constraint that forces two lines to be parallel or two circles to be concentric. Intelligence can also reside in dimensional constraints that force a feature's dimension to remain constant or enable the dimension to change based on a built-in formula.

Just as each part design is unique, so is the design intent for each part. Capturing this intent is a process in which you match the design intent with a feature or capability that makes it possible to create the design in the most efficient way while enabling you the maximum flexibility in making changes.

Different examples of design intent are shown in the following illustration being captured at the earliest stage of the design. The toolbars show constraint symbols (glyphs).

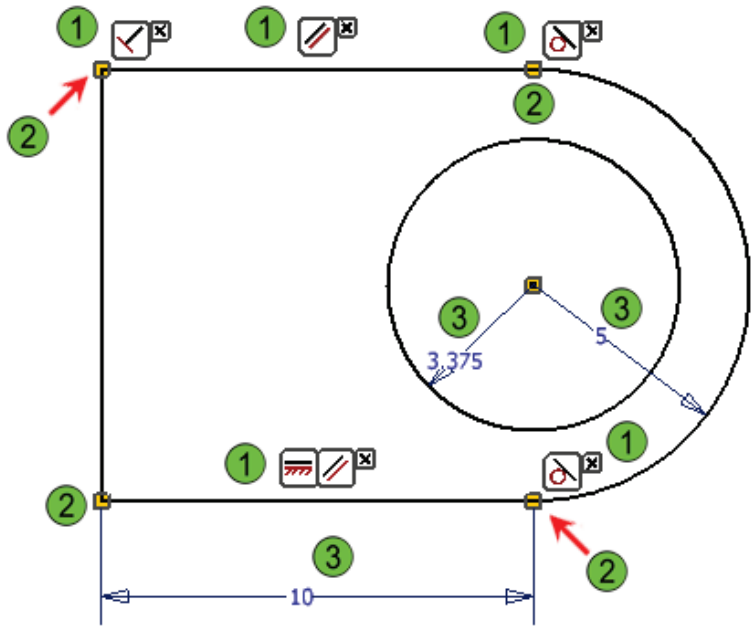

1. Toolbars displaying geometric constraints applied to the geometry. Each icon illustrates a specific type of geometric constraint that has been applied to the sketch, and as a result captures a portion of the design intent. For example, the right-most icon on the top toolbar indicates a tangent constraint between the top horizontal line and the arc on the right side of the sketch.
2. Coincident constraints are displayed by a yellow dot at the coincident point between two segments.
3. Dimensional constraints applied to the geometry. These types of constraints capture design intent by defining the size of objects in the sketch.

Guidelines for Capturing Design Intent

Consider the following guidelines when you begin a new part design. Each of the following points indicates an area in which design intent can be captured.

- Identify geometric relationships. For example, a feature's length may be directly related to its width, or the width or length of another feature.
- Identify areas of the design that may be prone to change as a result of design problems or revisions.
- Identify areas of symmetry or areas where features are duplicated or patterned.

Once you have identified the potential ways to capture your design intent, you can then match that intent with a specific Inventor tool or capability.

Example of a Part Design Capturing Design Intent

A simple parametric design of a plastic indexer is shown in the following illustrations. Each one reflects how a specific guideline of the design intent is captured and implemented into the design with a parametric feature.

Capturing Geometric Relationships in Design Intent

Design intent for the indexer part dictates that the outside diameter should be equal to twice the inside diameter in the following illustration. The design intent has been captured with the use of a simple formula in the dimension parameter.

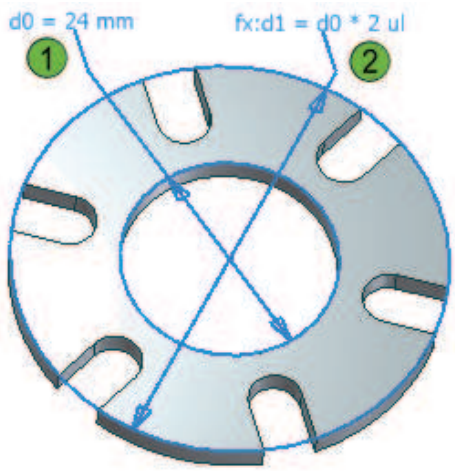

1. Inside diameter of the indexer part.
2. Outside diameter is determined by a formula equal to twice the inside diameter.

Capturing Design Intent for Features That Are Prone to Change

Design intent has been captured to allow for potential design changes in the following illustration. As the thickness of the part changes, so does the depth of the slots. This result is achieved by setting the depth parameter for the slot to All, ensuring the slot always extrudes completely through the part.

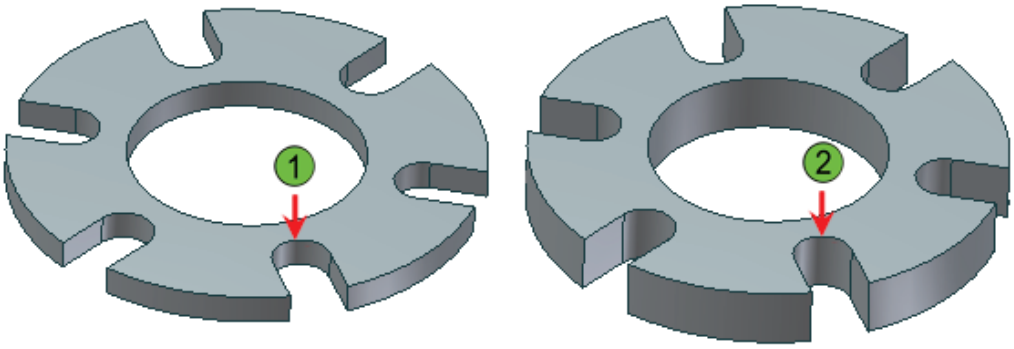

1. With a 3 mm part height, slot depth cuts though the entire part.
2. With a change in part height from 3 mm to 6 mm, the slot depth continues to cut through the entire part.

Capturing Symmetry in Design Intent

Design intent for symmetry has been captured in the part design in the following illustration by using a parametric pattern feature. By capturing the design intent in this manner, you can easily change the number or angled spacing of slots by editing the feature.

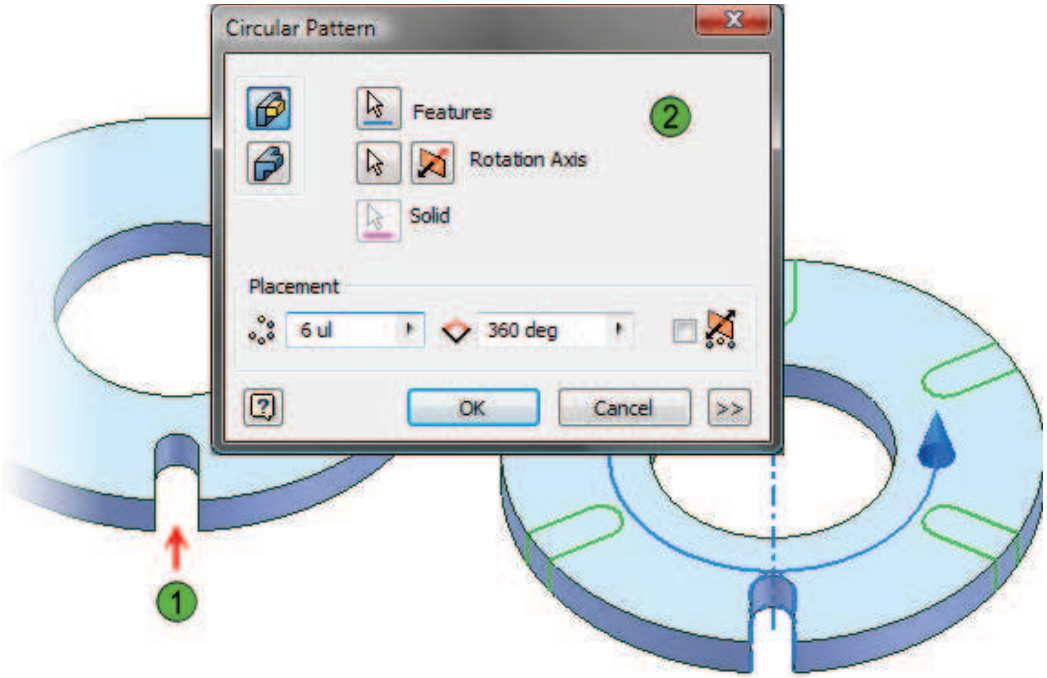

1. Original slot feature.
2. Circular pattern being created to duplicate the slot feature in a precise and easily editable manner.

Creating Parametric Part Models

The overall process for creating parametric part models is very flexible. With this flexibility, you can concentrate on your design, design intent, and essential design features instead of being limited by a rigid modeling process.

In the following illustration, what begins as a simple circle is transformed into fully parametric model.

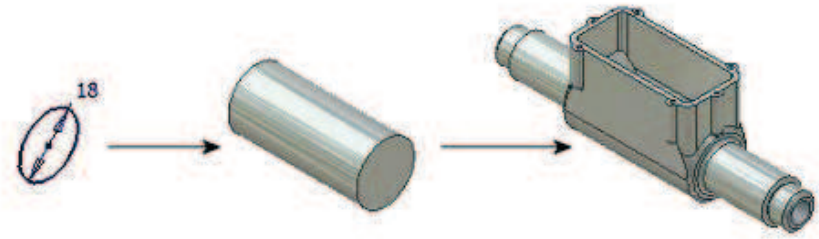

Process: Creating a Parametric Part

The following steps provide an overview of the process for creating a parametric part.

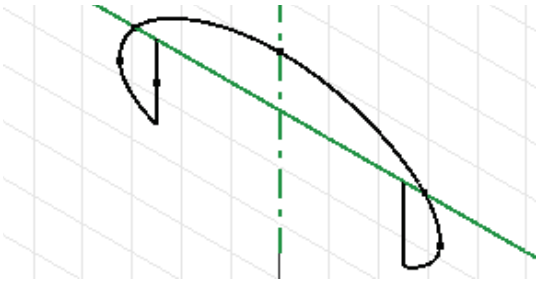

1. Create the initial sketch profile.
2. Capture the design intent by applying constraints and dimensions.

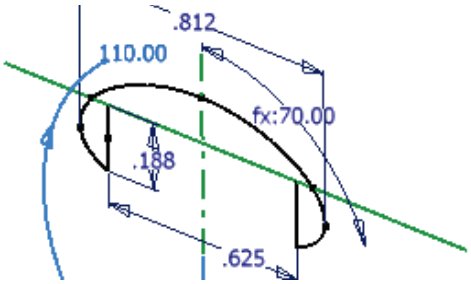

3. Use the part feature tools to create the base feature.

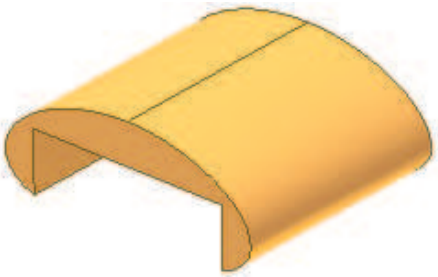

4. Continue to develop the design by creating additional sketched and placed features.

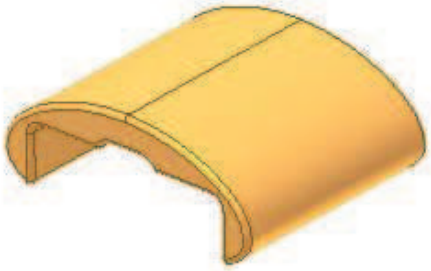

Part Design Considerations

When creating a parametric part model, try to determine the basic building blocks of the part; that is, how the part can be designed and built in stages. Also determine which aspects of the model are the critical aspects of the part. You create those aspects first in the order of their importance and relationship.

Part Design Workflow

The following steps represent the overall workflow for creating parts.

- Use one of the part templates provided to create a new part.
- All new parts you create have a blank sketch automatically placed. Create the profile of your geometry on the initial sketch.
- Use sketched features such as Extrude and Revolve to create your base feature.
- Create additional sketched and placed features as required to generate the necessary 3D geometry.

Part Design Environment

When you are editing a part file and the part environment is active, the ribbon and browser are displayed with the tools and information relevant to this environment.

The part design environment is shown in the following illustration.

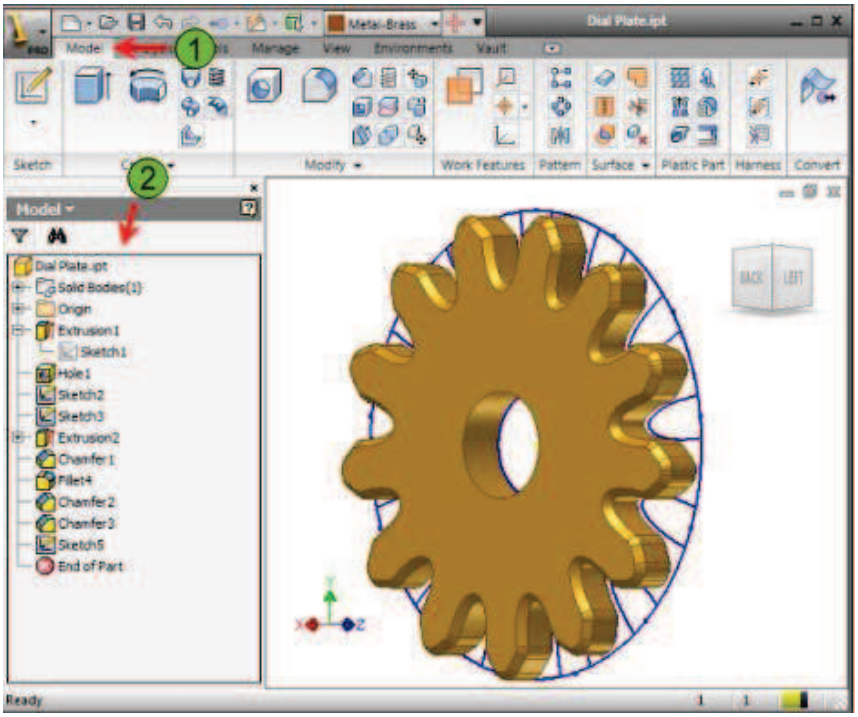

1. **Part Features on Ribbon Model Tab:** Displays part modeling tools while in part modeling mode.
2. **Browser:** Displays the feature history for the part or assembly.

Model Tab

The Model tab is displayed when you are editing a part model. You use these tools to create sketched and placed features on the part.

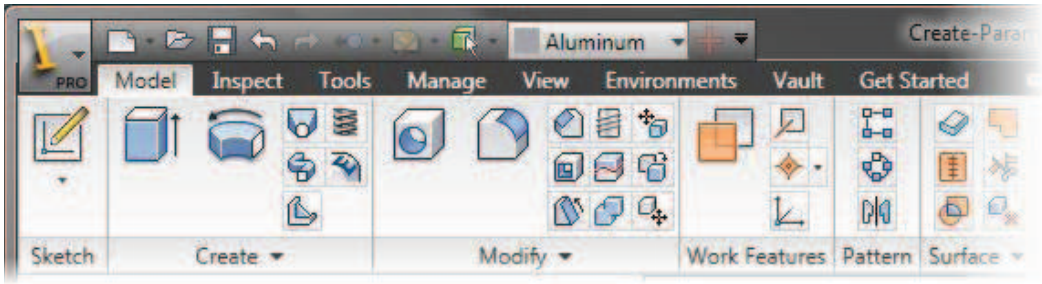

Browser

When you use the browser in the part design environment, it displays the Origin folder containing the default X, Y, and Z planes, axes, and center point. It also lists all features you use to create the part. Features are listed in the order in which they are created.

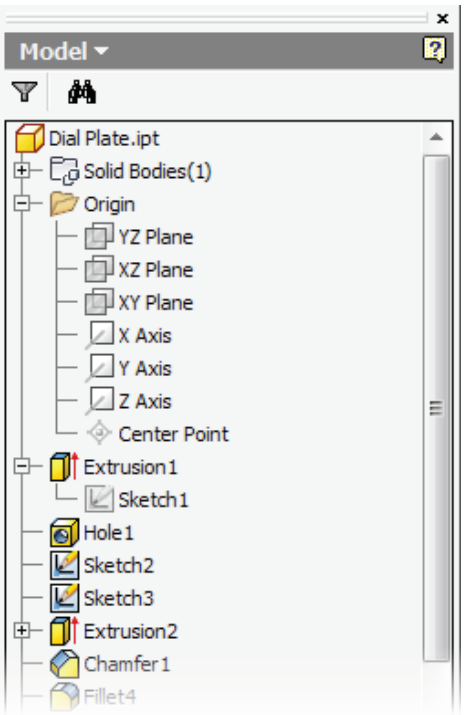

Exercise: Create a Parametric Part

In this exercise, you create a simple bracket by extruding the predefined sketch. You then edit the part by changing some of the parameters and add a fillet feature.

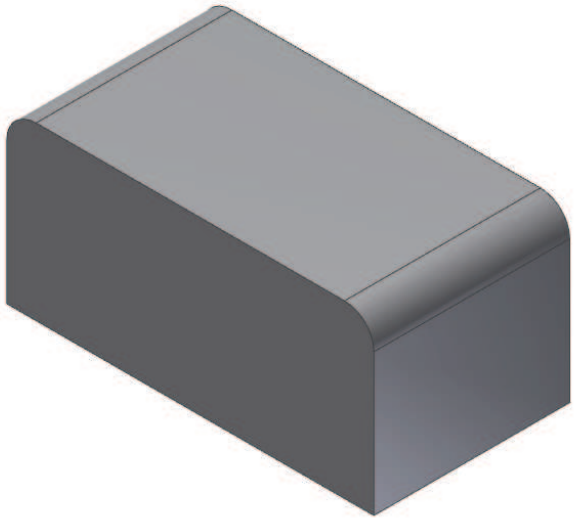

The completed exercise

1. Open **INV_002_Parametric_Part.ipt.**
   The initial sketch profile has been created and constrained.

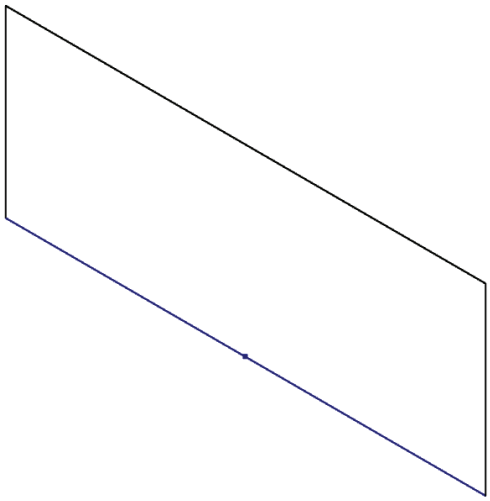

2. Right click sketch 1 in the browser > Select **Edit Sketch**.

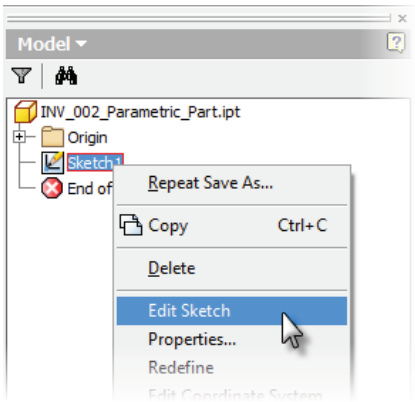

3. Add the dimension that will control the length and height of the Simple Conveyor.

- Click the **Dimension** Command.

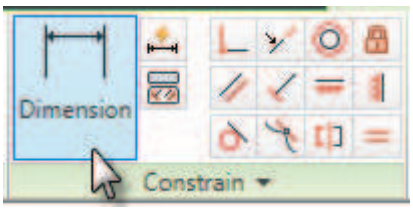

- Select the top line of the rectangle and then click to place the dimension. If necessary, click the new dimension to edit the value.
- Type in the new parameter value as shown below. **Length=75**
- Click the check mark to update the value.

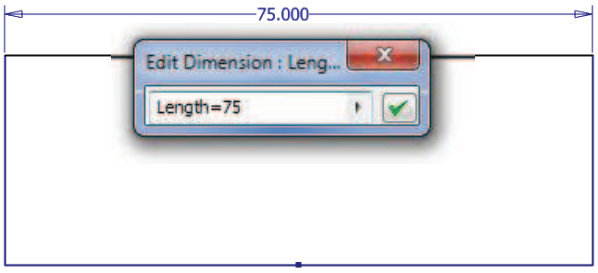

- Repeat the Dimension process and add another dimension to a vertical.
- Type in the new parameter value as shown below. **Height=30**

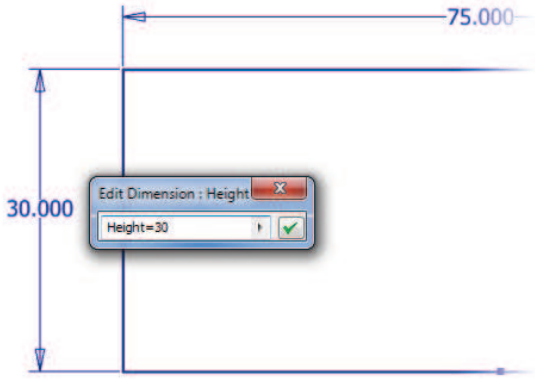

- Click the check mark to update the value.

4. Finish the Sketch.

- Click the **Finish Sketch** Button.

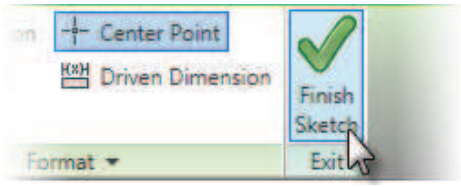

5. Click Model tab > Create panel > **Extrude**.

- For Distance, enter **Width=30 (1)**.
- Click the Symmetric Extrusion Button **(2).**
- Click **OK**.

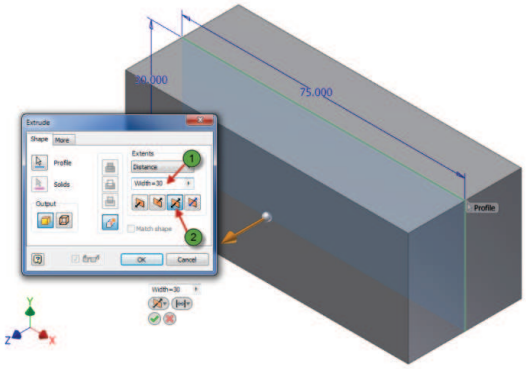

6. In the browser, expand the Extrusion feature.
   - The initial sketch is consumed by the 3D extrusion feature.

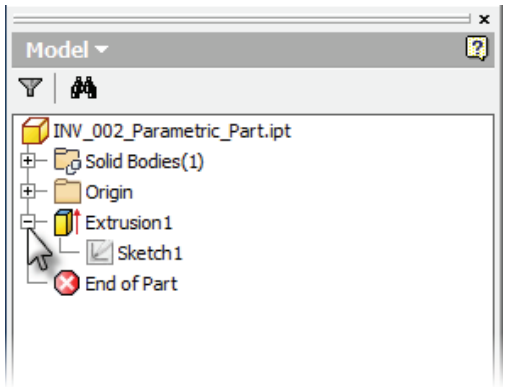

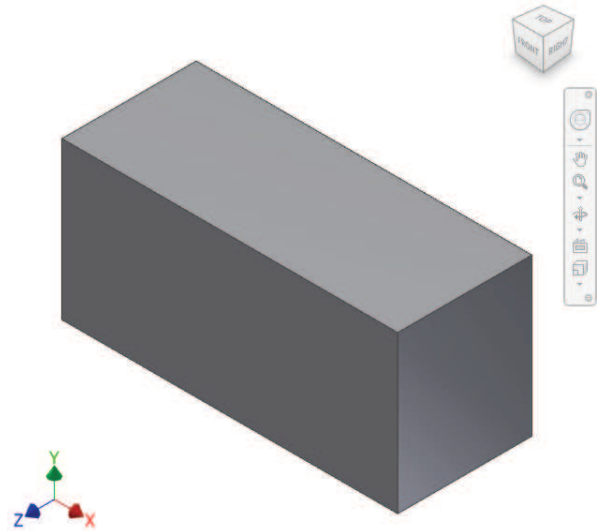

7. In the browser, double-click **Sketch1**.
   - Double-click the **30 mm** vertical dimension.
   - In the Edit Dimension dialog box, enter **35**.
   - Press **ENTER**.
   - On the Sketch tab, click **Finish Sketch**.

   The part is updated to reflect the new dimension value.

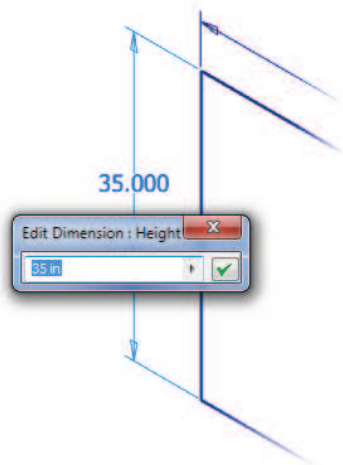

8. In the browser, right-click the Extrusion1 feature. Click Edit Feature.
   - For Distance, enter **40 mm**.
   - Click **OK**.

   The parametric part updates to reflect the new parameter value.

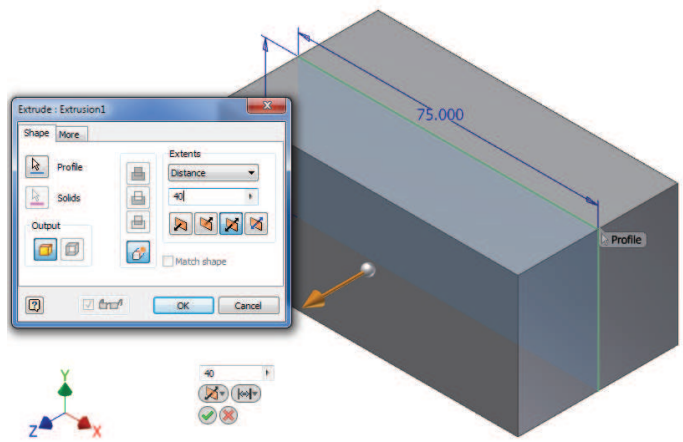

9. Click Model tab > Modify panel > **Fillet**.
   - In the graphics window, select the outside edges as shown.
   - For Radius, enter **6**.
   - Click **OK**. The fillet feature is updated.

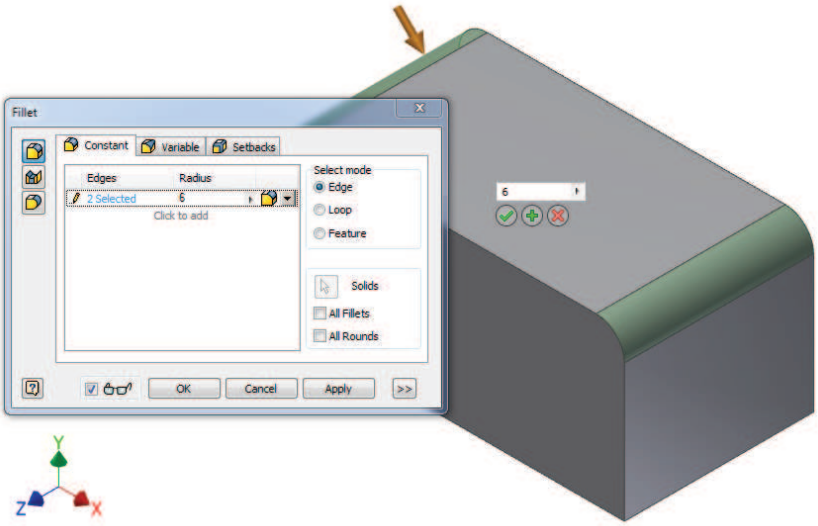

10. Close all files. Do not save.

Chapter Summary

By using the context-sensitive user interface and the tools that are available, you can quickly create basic parametric geometry. This chapter introduced you to the Autodesk Inventor user interface and concepts supporting parametric part design and capturing design intent.

Having completed this chapter, you can:

- Identify the main user interface components that are common to all Autodesk Inventor design environments and describe how to access different tools.
- View all aspects of your design by efficiently navigating around in 2D and 3D space.
- Describe the characteristics and benefits of a parametric part model.

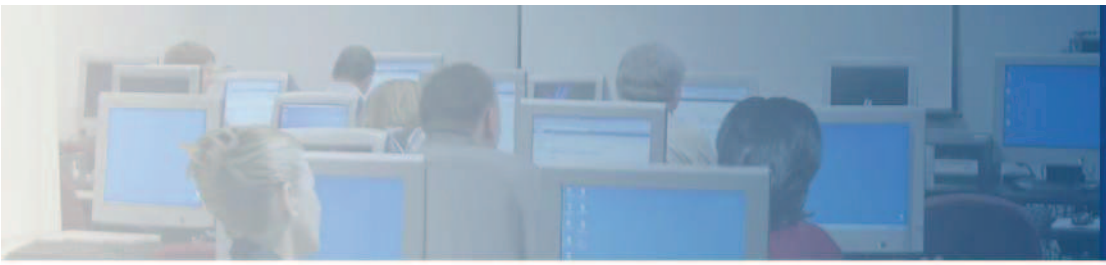

Chapter

6

Basic Sketching Techniques

The majority of the features that you create on your parametric part models start with constrained 2D sketches. Intelligent and predictable part designs require a thorough understanding of how to create 2D sketches and how to capture design intent by applying geometric and dimensional constraints.

Objectives

After completing this chapter, you will be able to:

- Use sketch tools to create 2D sketch geometry.
- Use geometric constraints to control sketch geometry.
- Apply parametric dimensions to your sketch geometry.

Lesson: Creating 2D Sketches

This lesson describes how to create 2D sketch geometry using sketch tools.

Nearly every parametric part begins with a 2D sketch, and every sketch you create defines a 2D plane on which your sketch geometry is created. These sketches not only form the foundation of each part, but are also used throughout the design process.

A basic parametric part for which several sketches were used to create its features is shown in the following illustration.

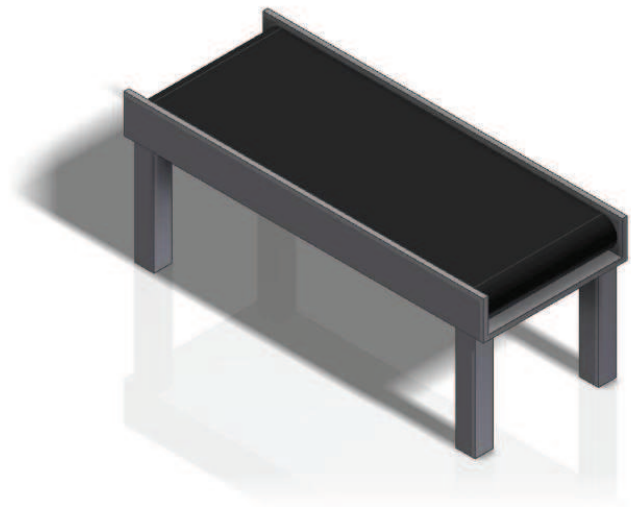

Objectives

After completing this lesson, you will be able to:

- Describe the differences between standard 2D sketching and 2D parametric sketches.
- Explain the options for aligning geometry in 2D sketches.
- Reorient the initial sketch to a different plane.
- Use sketch tools to create sketch geometry.
- Describe guidelines for creating successful sketches.

About Sketching

The sketch environment is where all 2D sketching takes place. When you create a new 2D sketch or edit an existing sketch, the sketch environment is activated.

The sketch environment is activated as the sketch is edited, as shown in the following illustration.

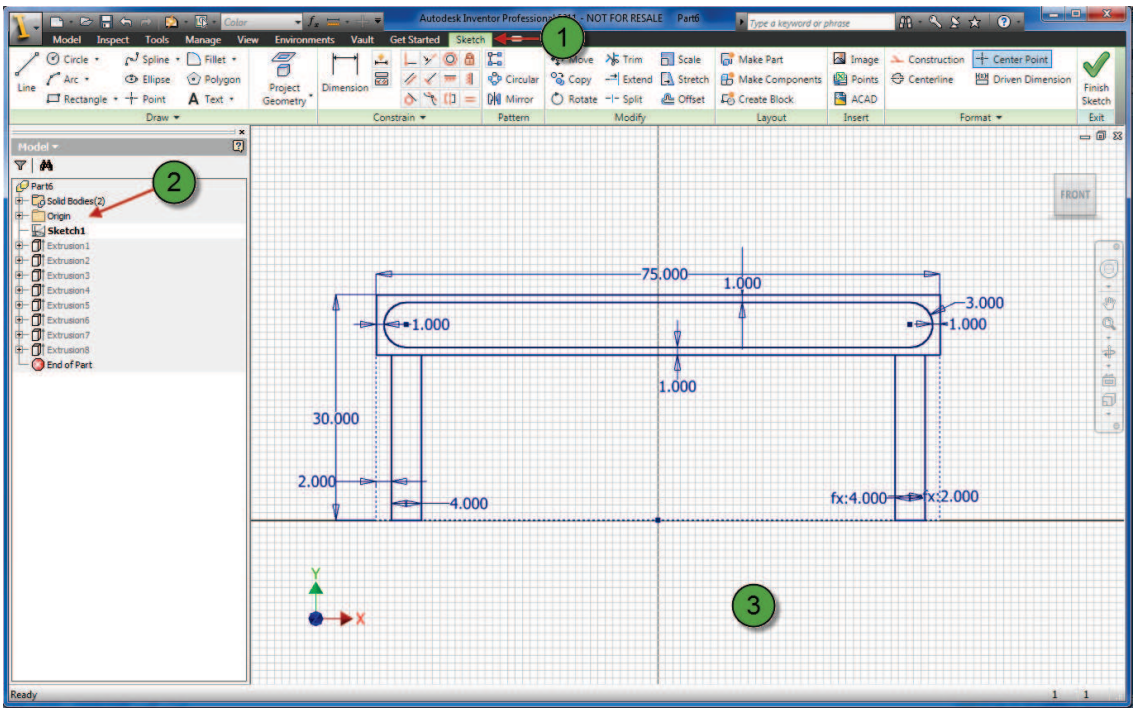

1. When the sketch environment is active, the Sketch tab is displayed.
2. The active sketch is highlighted in the browser while all other elements are dimmed.
3. When you activate the sketch environment, the grid lines and X and Y axes are displayed by default in the graphics window.

Parametric Sketching

A parametric sketch forms the base of each parametric part you create in Autodesk Inventor. Unlike 2D sketches that you can create in a nonparametric 2D application, when you create a sketch in Autodesk Inventor, you immediately begin to add intelligence to your part and capture design intent.

Constraints in Parametric Sketches

A parametric sketch consists of 2D geometry on which constraints are applied to control the size and potential behavior of the 2D geometry. There are two different types of constraints, geometric constraints and dimensional constraints. As you create geometry in Autodesk Inventor, some geometric constraints are applied automatically.

The symbols next to the geometry in the following illustrations are known as "glyphs" and represent 2D constraints. Glyphs are displayed while a sketch tool is active and you are sketching. The use of 2D constraints is one way in which design intent is automatically captured as you are creating your sketch geometry.

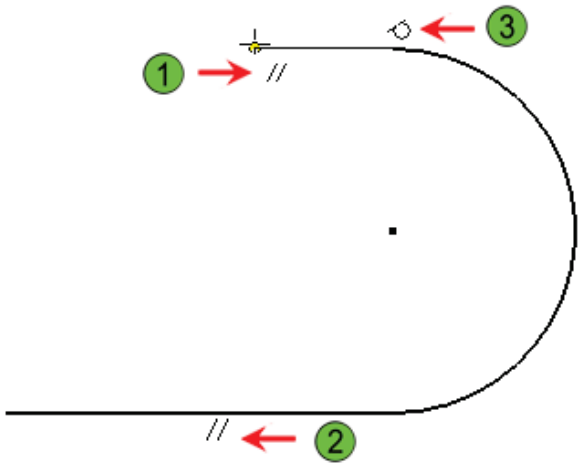

1. Indicates a parallel constraint being applied to the bottom horizontal line.
2. Indicates a parallel constraint with the top horizontal currently being drawn.
3. Indicates a tangent constraint between the arc and the horizontal line being drawn.

You must add dimensional constraints to each element of the sketch for which you need to specify a dimension. Both types of constraints applied to sketch geometry are shown in the following illustration.

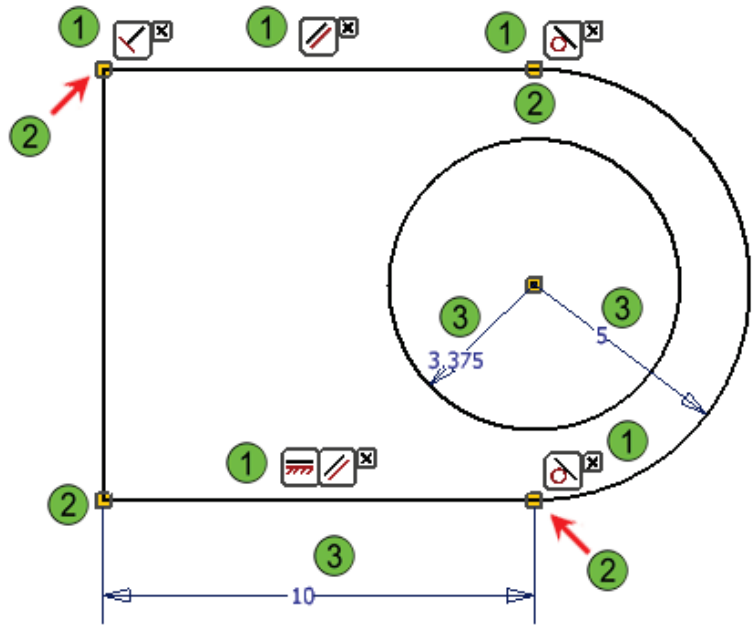

1 **Geometric Constraints**
Geometric constraints, which are applied to geometry, are represented by the symbols on the following toolbar. Each type of constraint is represented with a unique symbol.

From left to right:

- Perpendicular constraint that forces the line to remain perpendicular to the left-side vertical line.
- Tangent constraint, forcing the line to be tangent to the arc.
- Parallel constraint indicating that the line must remain parallel to the lower horizontal line.
- Horizontal constraint that forces the bottom line to be parallel the X-Axis of the sketch.

2 **Coincident Constraints**
These constraints force the endpoints of lines to remain coincident or connected.

3 **Dimensional Constraints**
These dimensions control the size of the objects. The diameter dimension controls the size of the circle, while the linear dimension controls the length of the horizontal line.

Parametric Sketches Versus Precise Sketches

Precise sketches created with AutoCAD®, by default have no parametric intelligence. A change in a dimension does not force the geometry to update to reflect the new dimension value. Parametric sketches in Inventor enable you to click and drag the geometry in directions allowed by the existing constraints while all conditions controlled by the constraints are maintained. For example, if you drag the outer arc to a different size, the horizontal lines remain tangent, horizontal, and one unit in length.

Example

The effect of 2D geometric constraints is shown in the following illustration, where an element of the sketch is dragged to reshape the geometry.

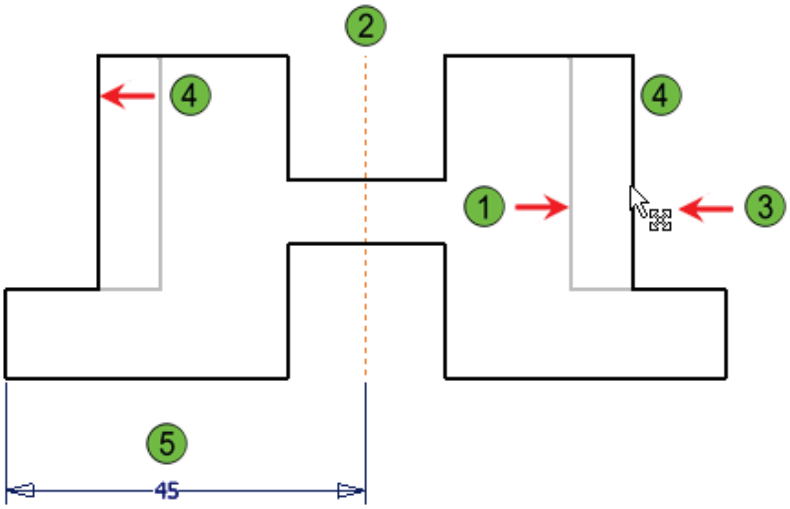

1. Original position of line element being moved.
2. Centerline element used with symmetry constraints.
3. Cursor dragging line to a new location.
4. New location of the line as it is being moved. Notice the same movement on the opposite side of the sketch.
5. Dimensional constraint positioning the edge of the part. A change in this dimension would be reflected on both sides of the centerline.

To achieve the same modifications in a nonparametric sketch, you would have to duplicate each edit on both sides of the centerline.

Fully Constrained Sketch Geometry

When you apply constraints to a sketch, each constraint removes degrees of freedom from the geometry. By removing degrees of freedom, you limit the direction or amount a given part of the sketch can be moved or resized. When a sketch has all degrees of freedom removed, it is considered to be fully constrained.

While it is not necessary to fully constrain a sketch before creating 3D features, it is recommended. A fully constrained sketch is predictable in the manner in which it can change, and reduces the number of errors as changes are made to the parametric part.

Identifying the Constraint Conditions

Once the sketch is fully constrained, the profile will be a single color.

Inventor uses color differences and numerical feedback to identify fully constrained as opposed to under constrained geometry. Represented in the following illustration, the lighter colored geometry requires either geometric or dimensional constraints to fully constrain the sketch. You can use these colors to identify which elements still require constraints. At the bottom right of the interface, the application indicates "6 dimensions needed" to fully constrain the sketch geometry.

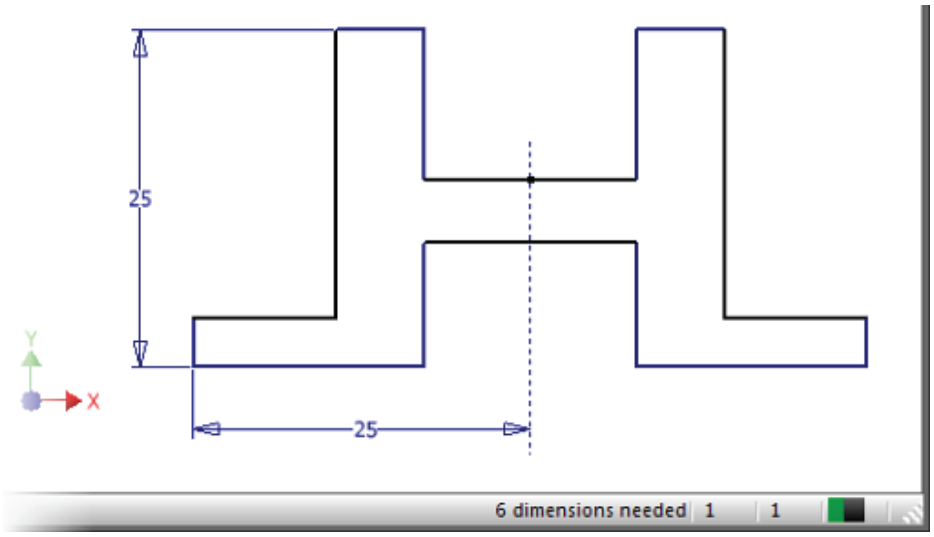

Colors used to show constraint conditions vary depending on your color configuration for Inventor. Color differences occurring while using the Presentation configuration (white background) are the least noticeable.

> As your sketch increases in complexity, the number of constraints or dimensions required to fully constrain the sketch also increases.

Point Alignment

When you are creating sketch geometry and you want to align to a point projected from existing geometry, you have two different workflows you can follow depending on the current setting for point alignment. To utilize and benefit from automatic point alignment, you need to understand what point alignment is and where to toggle it on and off.

The following illustrations show different point alignments automatically occurring during the creation of sketch geometry.

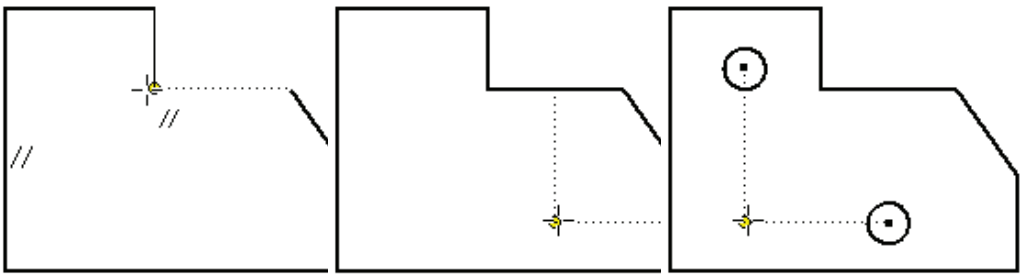

Point Alignment

The automatic alignment of points during sketch creation is an option that you can toggle on and off.

Point alignment during sketch geometry creation enables you to create your sketch geometry with the alignment you require as you create it. You can have the endpoints of the sketch geometry align to an extension, be perpendicular, or align to a virtual intersection of other sketch geometry. You achieve these point alignment locations by the position of the cursor. You do not need to scrub the cursor over the intended referencing geometry first.

The automatic point alignment option is set globally for the installation of Autodesk Inventor. You toggle on and off point alignment by selecting or clearing the Point Alignment On check box on the Sketch tab in the Application Options dialog box.

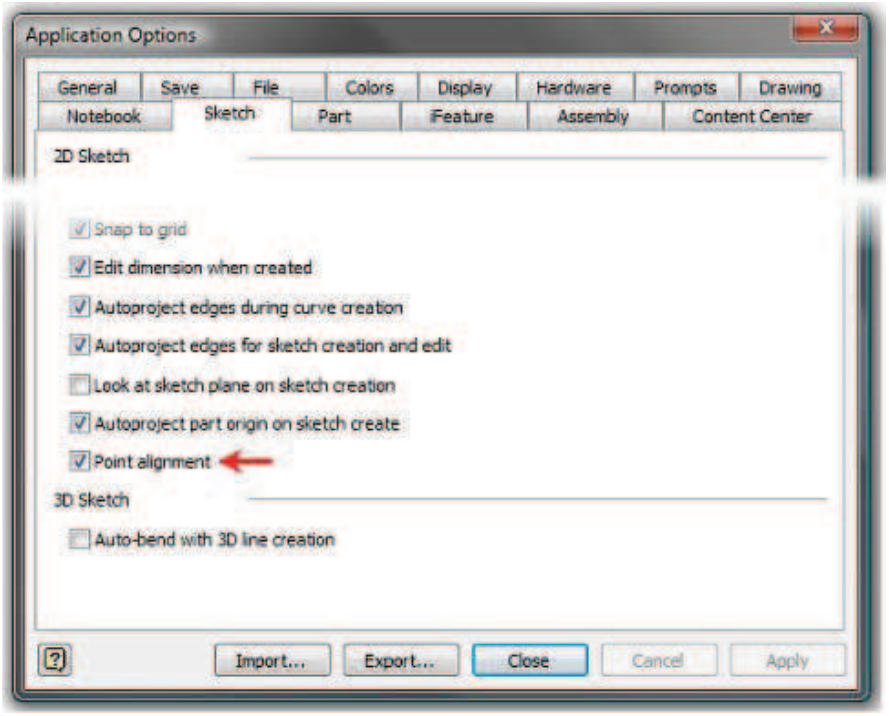

Reorienting the Initial Sketch

Each time you create a new part, the default configuration places a new sketch on the *XY* plane. In some cases you may want to begin sketching on a different plane. You can either delete the initial sketch and create a new one, or you can reorient the initial sketch including any geometry that might have been drawn.

The initial sketch of concentric circles has been reoriented from the *XY* plane to the *YZ* plane in the following illustration.

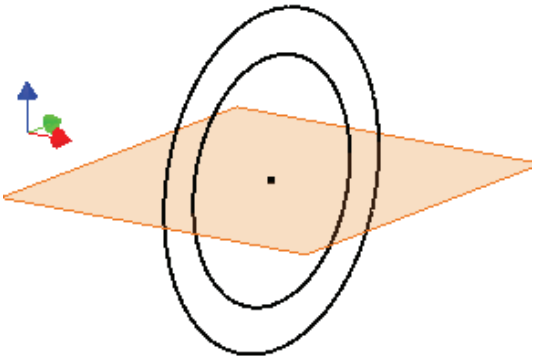

Procedure: Reorienting the Initial Sketch

The following steps describe how to reorient the initial sketch to a different plane:

1. If the sketch is active, exit the sketch environment.
2. In the browser, right-click the initial sketch and select **Redefine**.

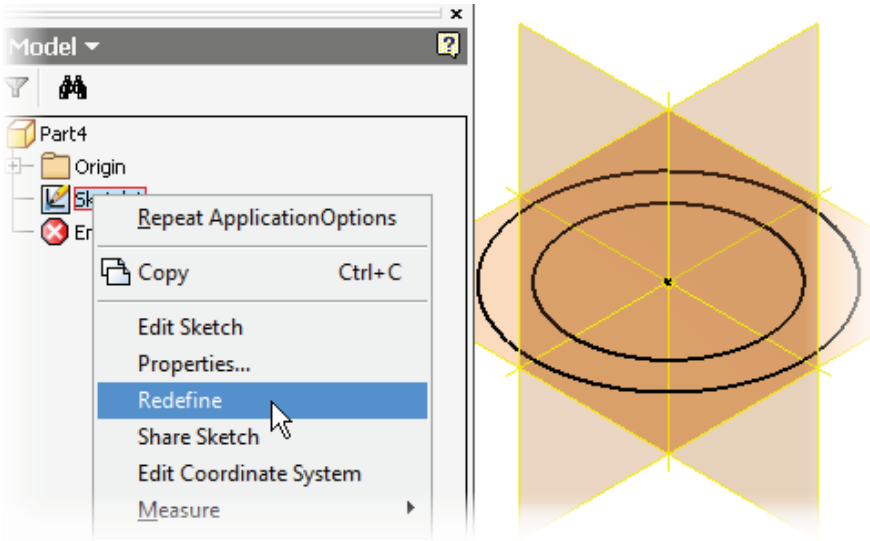

3. In the browser, expand the Origin node and select a plane to reorient the sketch.

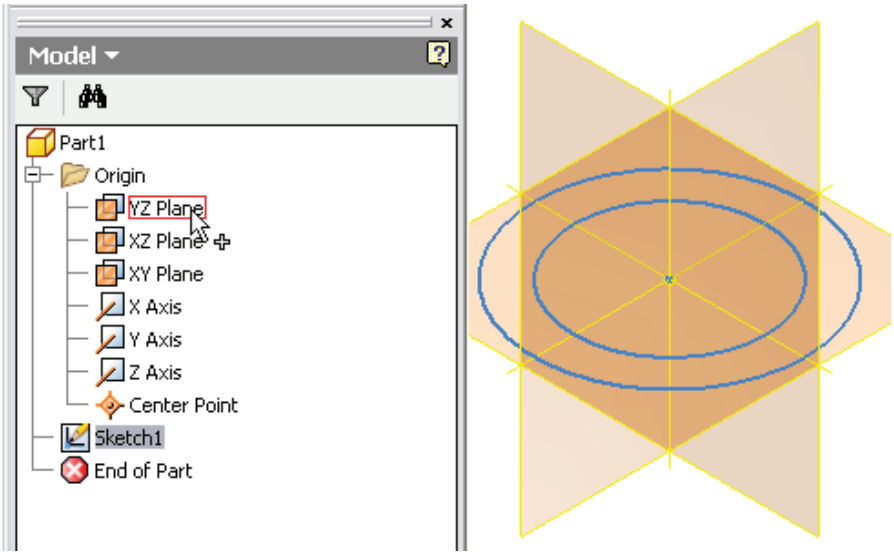

4. The sketch and any existing geometry are reoriented to the selected plane.

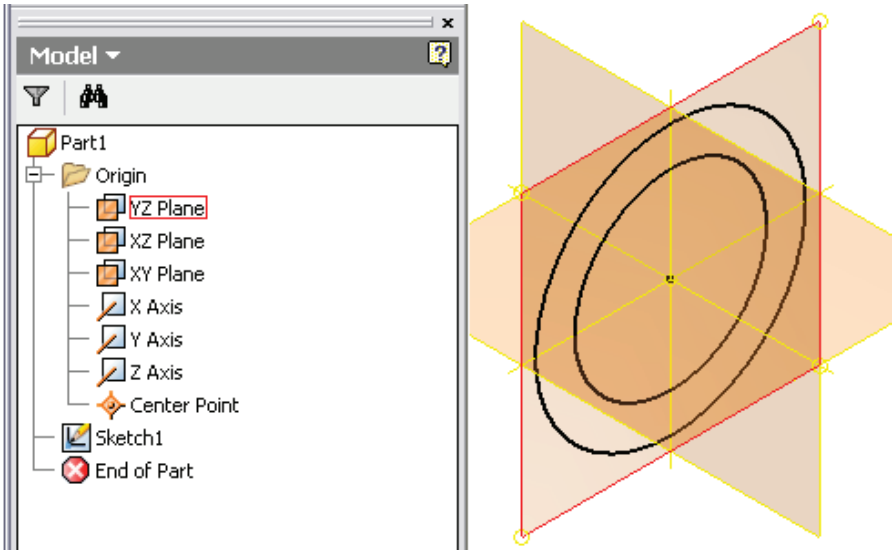

Basic Sketching Tools

A profile or path sketch can consist of objects such as points, lines, arcs, circles, and dimensional geometry. When the environment of a sketch plane is active, the ribbon switches to display the available sketch tools. The Sketch panel contains all the tools for creating, manipulating, and controlling sketch geometry.

Sketch Tool

By default, the first sketch in a new part is automatically created on the *XY* plane. If you require additional sketches, you use the Sketch tool to create them manually or to activate existing ones. The Sketch tool prompts you to select a plane to create a sketch, or to select an existing sketch to edit. You can select planes or sketches in the graphics window or in the browser. You can create a new sketch on a part face, origin plane, or work plane.

Access

Create 2D Sketch

Ribbon: *Model* tab > Sketch panel

Shortcut Menu: Right-click a selected face or plane

Exiting a Sketch

To exit the sketch, use one of the following methods:

- On the ribbon, click **Finish Sketch**.
- Right-click in the drawing area and click **Finish Sketch**.

Procedure: Creating Lines

The following steps describe how to create lines in your sketch:

1. Start the **Line** tool. Select a start point for the line segment.
2. Drag in the direction you want to draw the line. Note that the constraint glyph (1) is displayed. This glyph indicates the type of constraint being applied to the line segments.

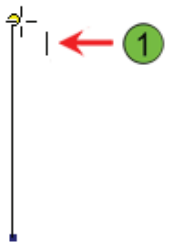

   Select a point to end the line segment.
3. Drag in the direction of the next line segment, again noticing the constraint glyph indicating the automatic constraint.

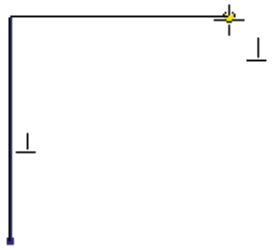

   Select a point to end the line segment.
4. Continue drawing line segments as required.

   If the constraint glyph represents a constraint that you would like to change, brush the cursor against the geometry on the sketch for which you want to apply the constraint and then continue drawing the line segment.
5. Continue drawing line segments as required.

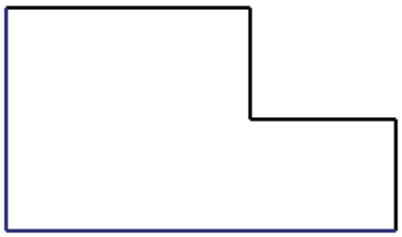

6. Right-click in the graphics window and select **Done**.

Procedure: Creating Circles

The following steps describe how to create circles in your sketch.

1. To create a center point circle, start the **Center Point Circle** tool. Select the center point of the circle.

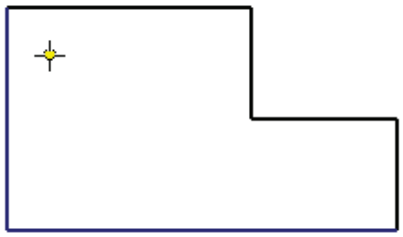

2. Drag to a location representing the outside perimeter of the circle. Select that point to create the circle.

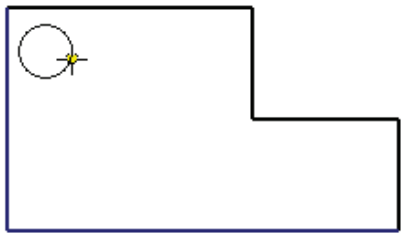

3. Right-click in the graphics window and select **Done**.
4. To create a three-point tangent circle, start the **Tangent Circle** tool.
5. Select three parts of the geometry for the circle to be tangent to.

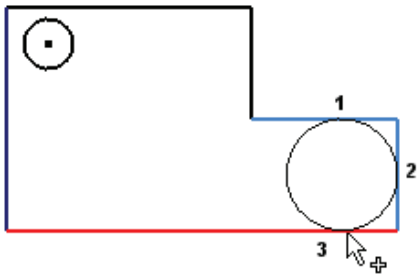

6. Right-click in the graphics window and select **Done**.

Procedure: Creating Perpendicular or Tangent Arcs

The following steps describe how to create a perpendicular or tangent arc in your sketch using the **Line** tool:

1. Start the **Line** tool.

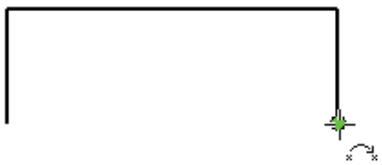

2. Click and drag the endpoint of an existing line or arc. Temporary tangent and perpendicular construction lines are displayed at the arc start point.
   - To create a perpendicular arc, click and drag in the direction of the perpendicular construction line.

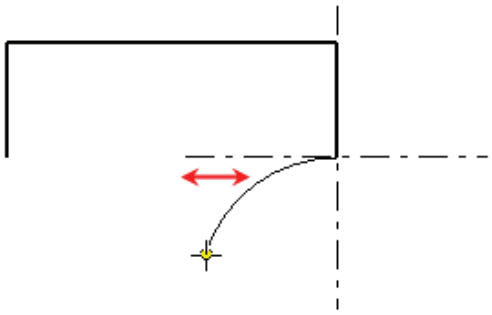

   - To create a tangent arc, click and drag in the direction of the tangent construction line.

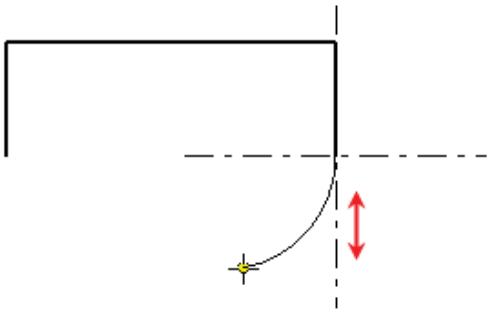

3. Continue to drag the endpoint to the final endpoint of the arc and release.

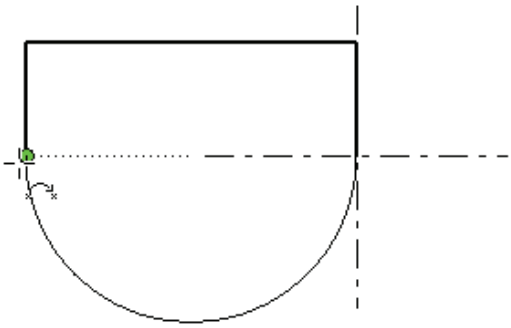

4. Right-click in the graphics window and select **Done**.

Procedure: Creating Three Point Arcs

The following steps describe how to create three-point arcs in your sketch:

1. Start the **Three Point Arc** tool. Select the start point of the arc.

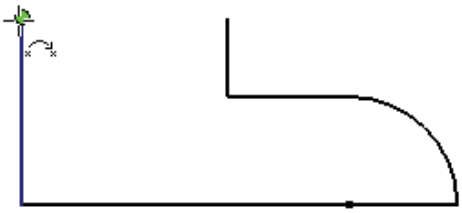

2. Select a point for the endpoint of the arc.

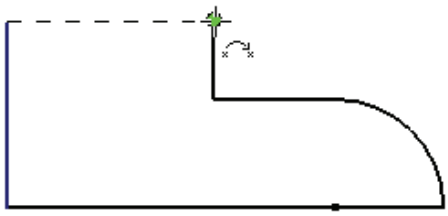

3. Drag to size the arc. Depending on existing geometry and arc size, constraint glyphs may be displayed.

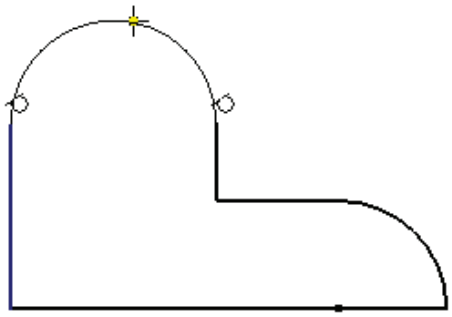

4. Right-click in the graphics window and select **Done**.

Procedure: Creating a Two Point Rectangle

The following steps describe how to create a two point rectangle in your sketch:

1. Start the **Two Point Rectangle** tool.
2. Select a point representing the first corner of the rectangle.
3. Select a point representing the opposite corner of the rectangle.

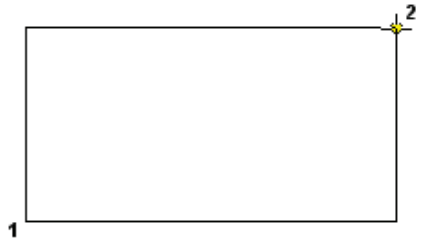

4. Right-click in the graphics window and select **Done**.

Guidelines for Successful Sketches

You can use several methods to create closed shapes. You can use tools such as the rectangle, circle, or polygon, or you can constrain sketch geometry so that separate sketch elements come together to create a closed shape. At times you may need to create sketch geometry that is not closed, for example, a path for a sweep feature or to create a surface; however, these guidelines focus on creating closed profiles.

Sketch Guidelines

Follow these guidelines for successful sketching:

- Keep the sketch simple. Do not fillet the corners of a sketch if you can apply a fillet to the edges of the finished 3D feature and achieve the same effect. Complex sketch geometry can be difficult to manage as designs evolve.
- Repeat simple shapes to build more complex shapes.
- Draw the profile sketch roughly to size and shape.
- Use 2D constraints to stabilize sketch shape before setting size.
- Use closed loops for profiles.

Example of Sketching Guidelines

In the following illustration, the same part results from two different sketches. In the image on the left, the sketch contains no fillets. The fillet features are created on the 3D part as placed features.

In the image on the right, the fillet features were placed at the sketch level. While this results in the same part shape, this method complicates the sketch geometry.

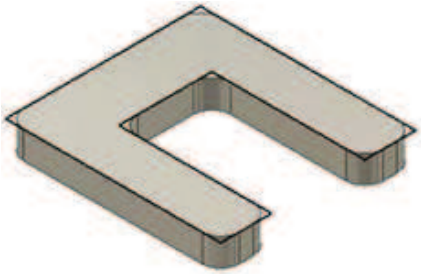

Correct: Sketch with no fillets

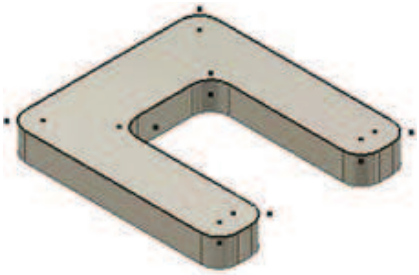

Incorrect: Sketch with fillets

Exercise: Create 2D Sketches

In this exercise, you create a simple Support Bracket extrusion using the basic sketching tools.

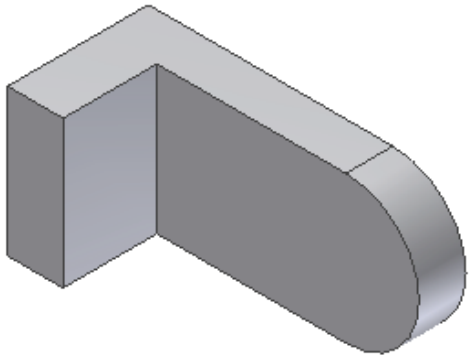

The completed exercise

Completing the Exercise

To complete the exercise, follow the steps in this book or in the onscreen exercise. In the onscreen list of chapters and exercises, click *Chapter 2: Basic Sketching Techniques*. Click *Exercise: Create 2D Sketches*.

1. Create a new part using the *Standard (mm).ipt* template.
   - On the Quick Access toolbar, click **New**.
   - In the New File dialog box, click the *Metric* tab.
   - Select **Standard (mm).ipt**.
   - Click **OK**.

2. Create a basic shape.
   - Start the **Line** tool.
   - Select a point near the origin.
   - Drag the cursor to the right, making certain the horizontal constraint glyph displays
     near the cursor.
   - Select the second point of the line approximately 25 mm from the start point.

   Note: The line length is displayed as it is drawn in the lower-right corner of the application window.

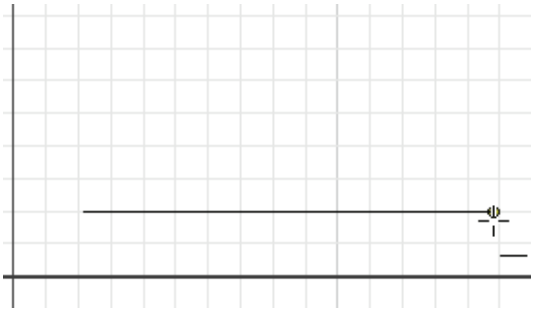

3. With the **Line** tool still active, create an inline arc segment.
   - Drag the endpoint of the line segment to the right to define the direction of tangency for the arc.
   - Release the left mouse button when the endpoint of the arc is directly above the start point. Use the grid spacing in the following illustration to define the size of the arc.

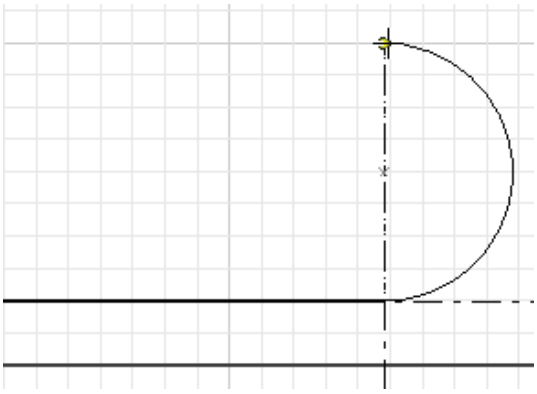

4. With the **Line** tool still active, draw another line segment to the left.
   - Move the cursor to the left until it is positioned vertically above the start point of and parallel to the first line segment. Ensure that the constraint glyphs are displayed as shown in the following illustration.
   - Click to create the line segment.

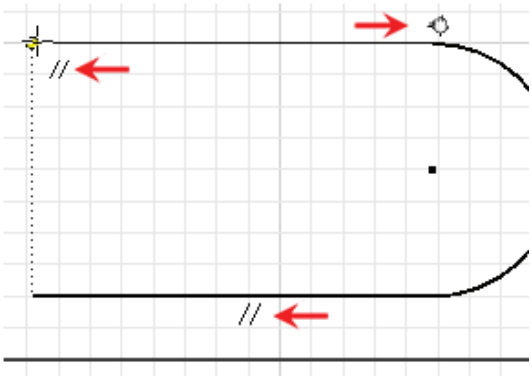

5. Complete the sketch by creating the last line segment as shown.

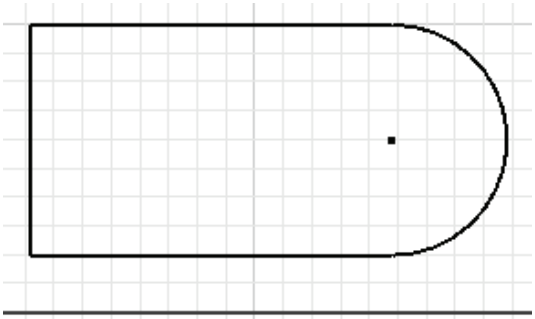

6. On the ribbon, click **Finish Sketch** to exit the sketch.
7. On the ViewCube, click the top-right corner to view the sketch in an isometric view.

8. Extrude the shape 5 mm.
   - Click *Model* tab > Create panel > **Extrude**.
   - In the Extrude dialog box, for distance, enter **5 mm**.
   - Click OK.

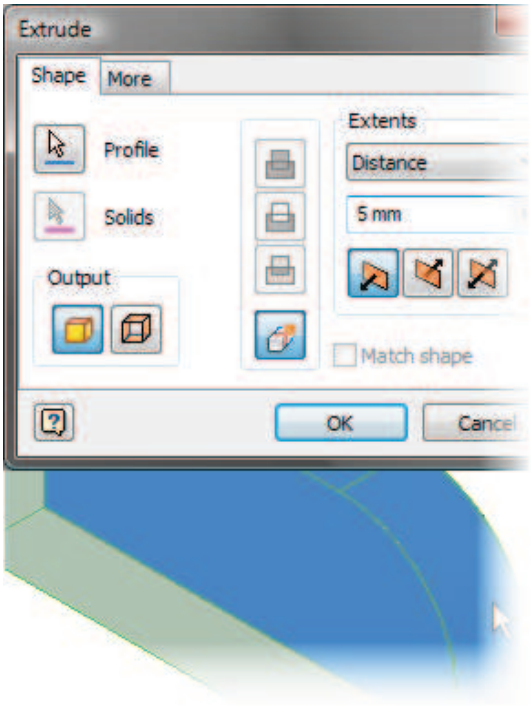

9. To create a new sketch on the front face of the part.
   - Right-click the front face of the part.
   - Select **New Sketch**.

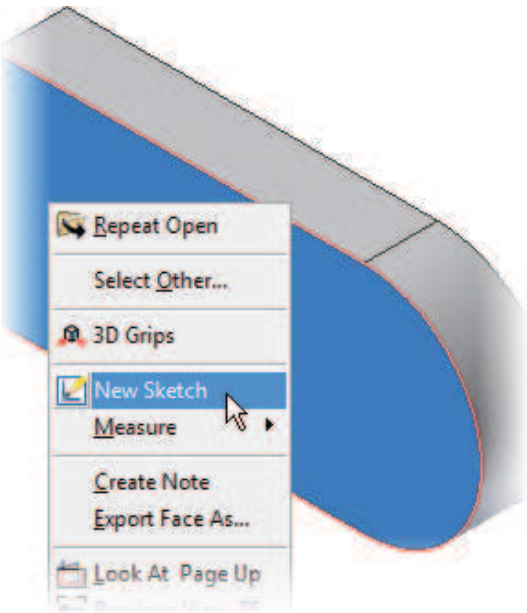

10. Draw a rectangle on the top surface.
    - Start the **Two Point Rectangle** tool.
    - Select point 1 as shown.
    - Select point 2 as shown.

    Note: When selecting the points for the rectangle, make sure the coincident constraint glyphs appear. Depending on how your Sketch Options are set, the edges on the face may not be projected and thus the coincident constraints will not appear. If this occurs, right-click in the graphics window while sketching the rectangle and select the AutoProject option.

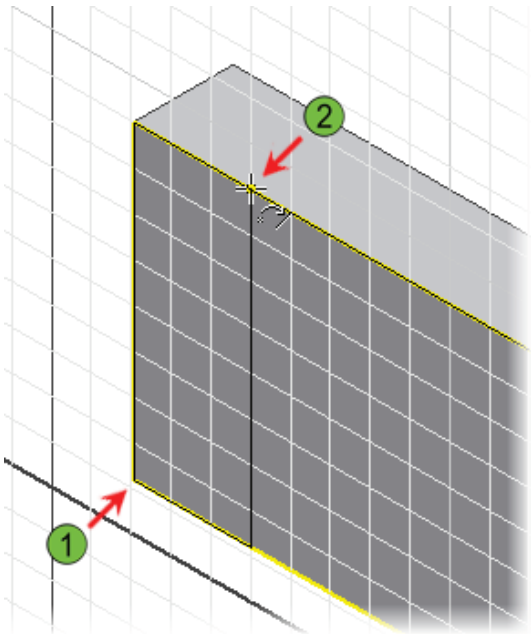

11. On the ribbon, click **Finish Sketch** to exit the sketch.

12. Extrude the new sketch a distance of 10 mm.
    - Start the **Extrude** tool.
    - Select a point inside the rectangle.
    - In the Extrude dialog box, enter **10 mm**.
    - Click **OK**.

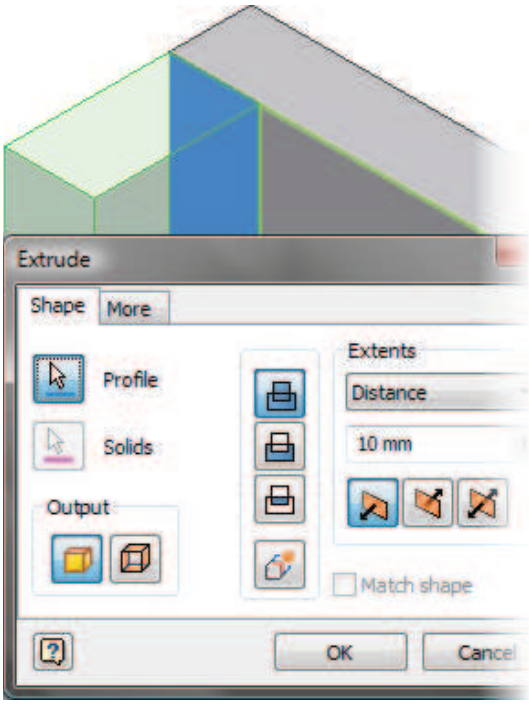

13. Close all files. Do not save.

Lesson: Geometric Constraints

This lesson describes geometric constraints and how to apply them to sketch geometry. You use geometric constraints to control sketch geometry. For example, a vertical constraint applied to a line segment forces that line segment to be vertical. A tangent constraint added to an arc forces that arc to remain tangent to the geometry that has been constrained.

Geometric constraints represent the foundation of all parametric design. Using these objects, you can capture your design intent and force the geometry to follow the rules set by each constraint.

2D constraints on a part sketch are shown in the following illustration.

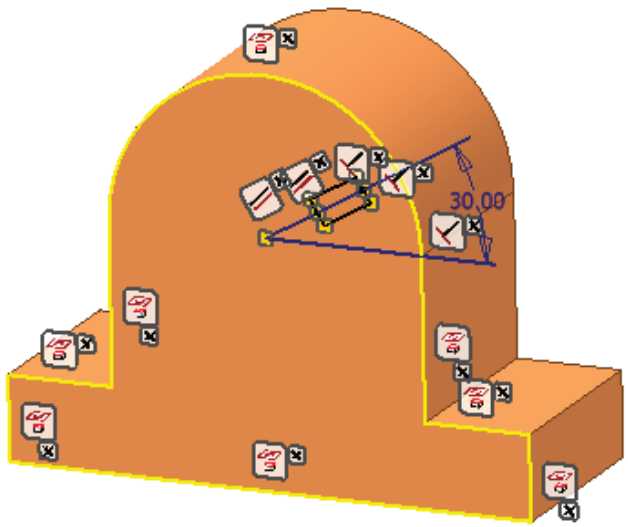

Objectives

After completing this lesson, you will be able to:

- Describe geometric constraints and their effects on geometry.
- Explain how constraint inference and persistence provide complete control over when, where, and which constraints are created in a sketch.
- Apply geometric constraints to sketch geometry.
- View and delete constraints using the **Show Constraints** tool.
- State key guidelines for successful constraining.
- Explain how to display sketch degrees of freedom and how they can assist in creating fully constrained sketches.

About Geometric Constraints

Several different types of constraints exist, each with a specific capability and purpose. The selection you choose depends largely on the design intent.

As you create sketches, some constraints are inferred (applied automatically). In most cases the inferred constraints are sufficient for your initial constraints. As you continue to develop the sketch, you may need to add additional constraints to properly stabilize the sketch geometry.

The effects of constraints on sketch geometry are shown in the following illustration. The sketch on the left was purposely drawn using only some of the inferred constraints. The sketch on the right is the result of adding additional constraints such as perpendicular, parallel, and collinear.

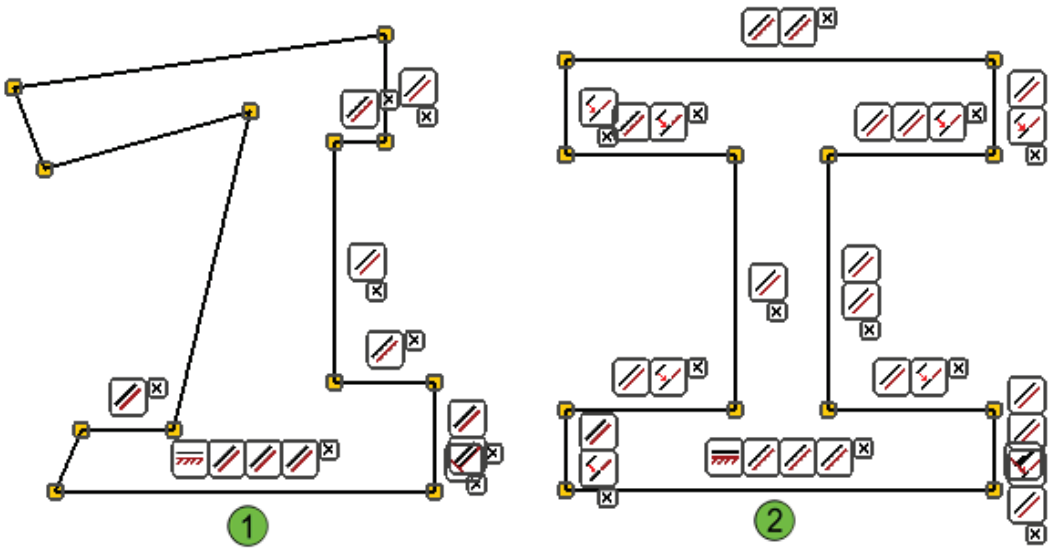

1 Initial inferred constraints only.

2 After applying constraints.

Definition of Geometric Constraints

Geometric constraints stabilize sketch geometry by placing limits on how the geometry can change when you attempt to drag or dimension it. For example, if a horizontal constraint is applied to a line, that line is forced to be horizontal at all times.

In the following illustration, the circle on the right is being resized. Tangent constraints have been applied to the lines. As the circle is resized, the lines remain tangent to both circles.

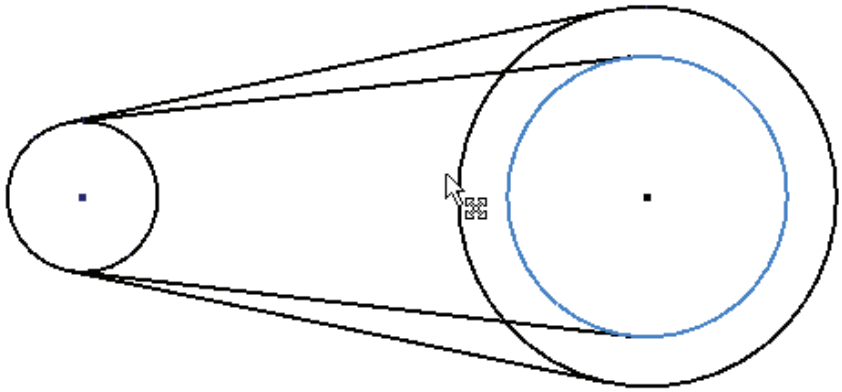

Constraint Types

You can use the following constraint types to constrain your sketches:

Constraint	Description	Before Constraint	After Constraint
	Tangent: Use to make selected elements tangent to one another.		
	Perpendicular: Use to make selected elements perpendicular to one another.	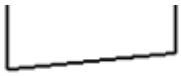	
	Parallel: Use to make selected elements parallel to one another.	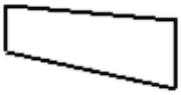	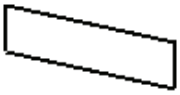
	Coincident: Use to make two points exist at the same point location.		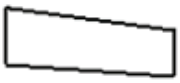
	Concentric: Use to force two arcs, circles, or ellipses to share the same center point.		

Constraint	Description	Before Constraint	After Constraint
	Collinear: Use to force two lines or ellipse axes to lie on the same line.		
	Horizontal: Use to force the element to be parallel to the *X* axis of the current sketch coordinate system.		
	Vertical: Use to force the element to be parallel to the *Y* axis of the current sketch coordinate system.		
	Equal: Use to force two elements to be of the same length. In the case of arcs or circles, the radius becomes equal.		
	Fix: Use to cause an element to be fixed in location to the current sketch coordinate system.		
	Symmetric: Use to cause the elements to be symmetrically constrained about a line.		
	Smooth: Use to cause a curvature continuous condition (G2) between a spline and another curve, line, arc or spline.		

Horizontal Constraint Example

In the following illustration, the application of a horizontal constraint is shown. The two circles are constrained to the endpoints of the line. The design intent requires these two circles to remain aligned. After the horizontal constraint is applied to the line, the line updates and the circle on the right side moves with the line.

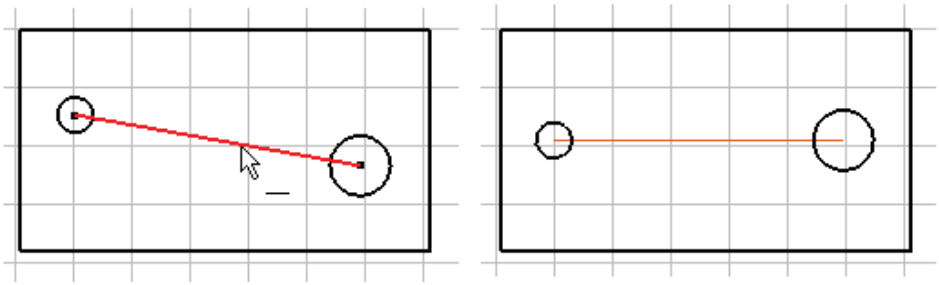

About Constraint Inference and Persistence

By default, when you create sketch geometry, that geometry can automatically have geometric constraints applied to it. To control when geometric constraints are automatically inferred and applied in a sketch, you must understand what it means to have constraints inferred and the meaning of persistence, and where and how to change their related settings.

In the following illustration, a sketch is shown being created alongside the completed sketch with its geometric constraints displayed. As the sketch geometry was being created, the geometric constraints were automatically added to the geometry.

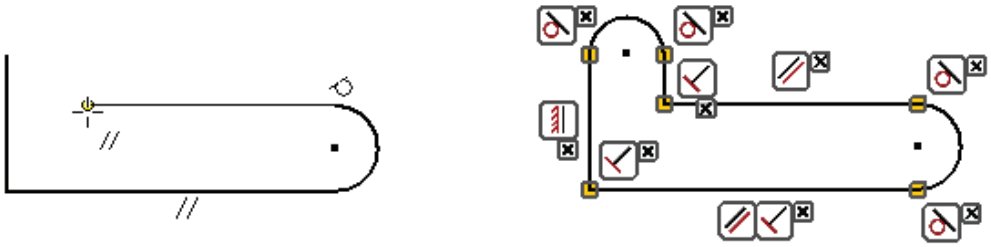

Definition of Constraint Inference and Persistence

As you are working in a sketch, several types of geometric constraints can be automatically applied to sketch geometry as it is created. This includes constraints such as perpendicular, parallel, coincident, horizontal, vertical, and tangent. The automatic application of geometric constraints is referred to as constraint inference and persistence.

When you are sketching geometry and a valid geometric constraint to another sketch geometry is identified, that constraint is said to be inferred. When a constraint is inferred, the constraint symbol for that geometric type displays. If you click to create the sketch geometry when the constraint symbol is displayed, and if the inferred geometric constraint is automatically applied to the sketch geometry, then that constraint is said to be persistent. Depending on your settings, that inferred constraint may or may not be automatically added to the sketch geometry.

The evaluation of sketch geometry for constraint inference occurs automatically based on the location and relationship of the geometry being sketched to the existing geometry around it. You can have aspecific piece of sketch geometry inferred by passing the cursor back and forth over the geometry. Passing the cursor back and forth over the sketch geometry is referred to as scrubbing the geometry.

You can control the automatic application of geometric constraints through the use of the Constraint Inference and Constraint Options settings or the CTRL key.

By changing the **Constraint Inference** and **Constraint Persistence** options, you control whether constraints are automatically inferred and applied, only inferred but not applied, or neither inferred nor applied. When you press and hold CTRL as you create sketch geometry, no geometric constraints are inferred or applied.

Having geometric constraints automatically applied to the sketch geometry as you create it means you decrease the number of constraints required later to control the sketch geometry's shape, size, and position.

User-Controlled Constraint Inference and Persistence

As you create sketch geometry, the automatic inference of constraints is dependent on the setting of the **Constraint Inference** option, and the settings for the Constraint Options, as set in the Constraint Options dialog box. The actual creation of an inferred constraint in the sketch is dependent on the Constraint Persistence option.

Icon	Option	Description
	**Constraint Inference**	This setting controls whether or not sketch constraints are inferred.
	**Constraint Persistence**	This setting controls whether or not inferred sketch constraints are created.

You change the settings for the **Constraint Inference** and **Constraint Persistence** options on the Constrain panel of the ribbon. There are three different combinations of settings you can set for constraint inference and persistence. You can have both settings off, only the inference setting on, or both on. As you are creating sketch geometry, you can change the settings for Constraint Inference and Constraint Persistence to match your requirements for the sketch geometry you are about to create.

The following table illustrates the settings for **Constraint Inference** and **Constraint Persistence** and describes the various behaviors associated with these options.

Option	Description
	**Both Off:** As you create sketch geometry, you do not infer geometric constraints other than coincident constraints. Therefore, the sketch geometry does not automatically have geometric constraints like horizontal, parallel, or perpendicular applied to its geometry. Lines can still snap to horizontal and vertical, and point alignment can still occur if it is enabled.
	**Inference Only:** As you create sketch geometry, you can infer geometric constraints like parallel, perpendicular, and tangent. However, the only geometric constraints automatically applied to the sketch are coincident constraints. Use this setting to get the initial sketch geometry aligned and positioned as you require without adding initial geometric constraints.
	**Both On:** As you create sketch geometry, you can infer geometric constraints such as parallel, perpendicular, and tangent. Any inferred constraint is automatically added and applied to that sketch geometry.

Constraint Inference Options

You access the Constraint Options dialog box by selecting **Constraint Options** in the shortcut menu when a sketch is active for editing. Within the Constraint Options dialog box, there are two areas for setting constraint inference: Selection for Constraint Inference and Scope of Constraint Inference.

In the *Selection for Constraint Inference* area, you select which geometric constraints you want to infer as you are creating new sketch geometry. For these options to be selectable, the Constraint Inference option must already be on.

In the *Scope of Constraint Inference* area, you set either to automatically evaluate all sketch geometry to infer constraints from, or to use only the sketch geometry you preselect.

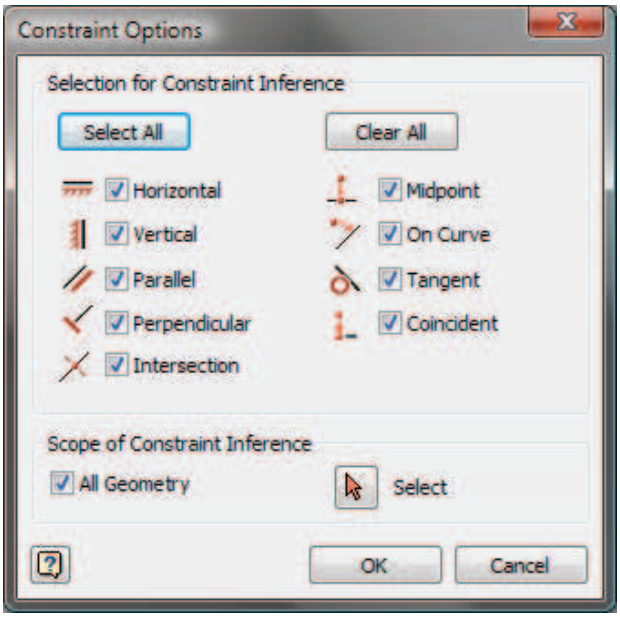

Example Settings and Uses for Constraint Inference and Persistence

The way you set the **Constraint Inference** and **Constraint Persistence** options depends on the sketch geometry you are creating and the workflow you want to follow. For example:

- If you are sketching geometry that needs to be at varying angles other than horizontal, vertical, parallel, and perpendicular to other geometry, you should have both settings off so the geometry does not align in that manner nor have geometric constraints applied.
- If you want to create the sketch geometry and manually apply each geometric constraint so it has a specific constraint scheme, then you should have both settings off or have only the Constraint Inference option on.
- If you want to infer constraints and apply the constraints to the sketch geometry as you create it, then you should have both settings on.

In the following illustration, the progressive steps used to create the sketch are shown along the top. The settings that were used for constraint inference and constraint persistence are shown at the bottom with their respective constraint results.

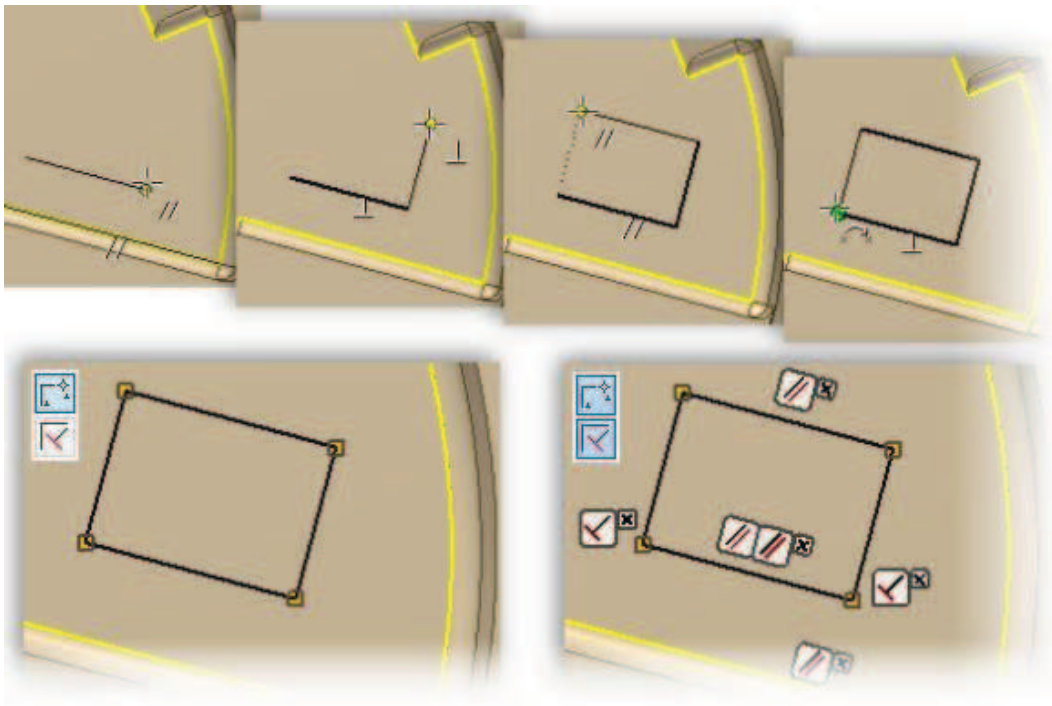

Applying Geometric Constraints

Each type of constraint can be applied to certain types of geometry and in certain situations. Some constraints such as perpendicular are relational constraints and must be applied to two elements in the sketch. A relational constraint defines a geometric relationship between two objects. Other constraints such as vertical can be applied to a single object or two points.

Accessing Constraint Tools

2D constraints are available on the ribbon, *Sketch* tab > Constrain panel.

Access

2D Constraints

Ribbon: *Sketch* tab > Constrain panel

Procedure: Applying a Horizontal Constraint

The following steps give an overview for applying a horizontal constraint.

1. Click *Sketch* tab > Constrain panel > **Horizontal**.
2. Select the geometry to be constrained.

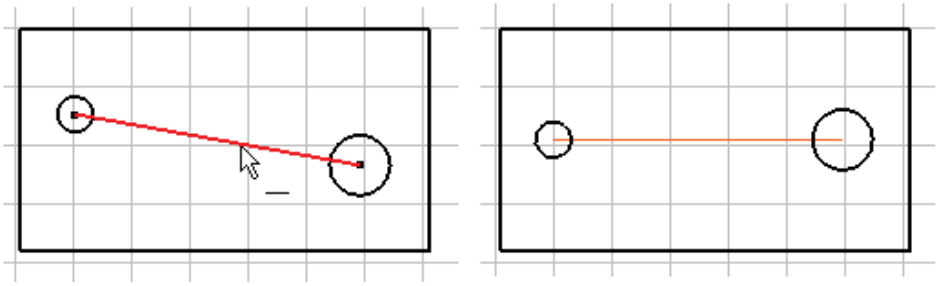

3. Add more horizontal constraints, or right-click and select **Done**.

Procedure: Applying a Horizontal Constraint between Point and Midpoint

The following steps give an overview for applying a horizontal constraint between two points.

1. Start the **Horizontal** constraint tool.
2. Select a point such as the endpoint of a line or center of a circle.

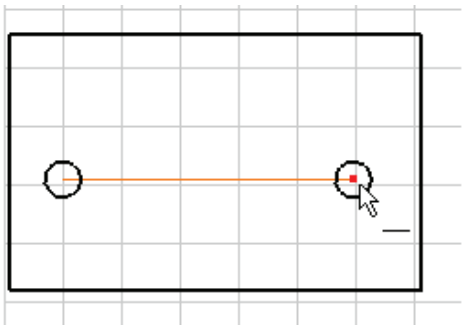

3. Select the midpoint of an existing line.

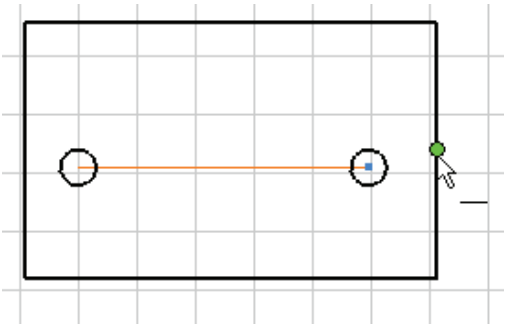

The geometry is now constrained horizontally based upon the two points selected.

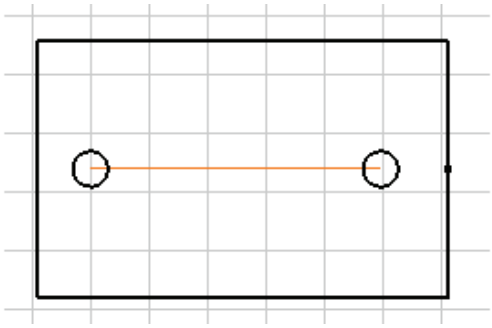

Procedure: Applying an Equal Constraint

The following steps give an overview for applying an equal constraint to two circles.

1. Click *Sketch* tab > Constrain panel > **Equal**.
2. Select a circle, line, or arc.

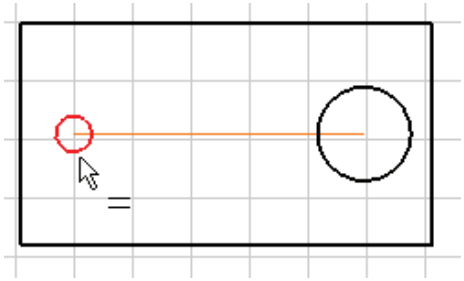

3. Select the circle, line, or arc to which you want to apply the equal constraint.

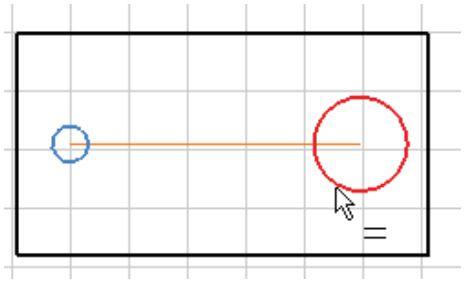

4. The selected geometry is now constrained to be equal in size.

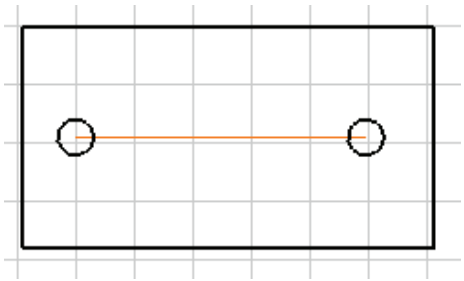

Procedure: Applying a Symmetrical Constraint

The following steps give an overview for applying a symmetrical constraint.

1. Click *Sketch* tab > Constrain panel > **Symmetric**.
2. Select the first sketch element for the constraint.

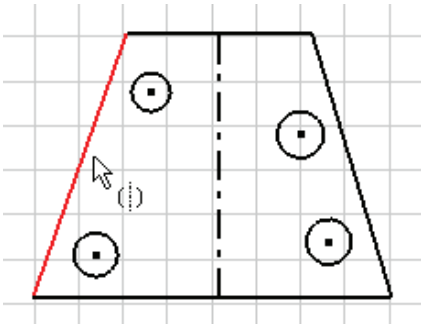

3. Select the second sketch element for the constraint.

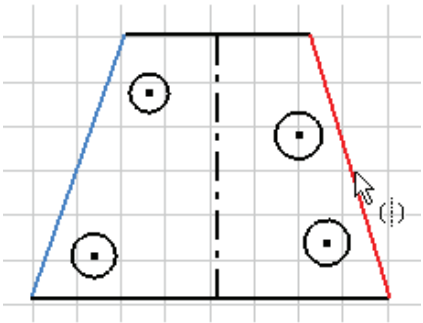

4. Select a sketch element to be used for the symmetry line.
   Note: You only need to select the symmetry line once during the current session.

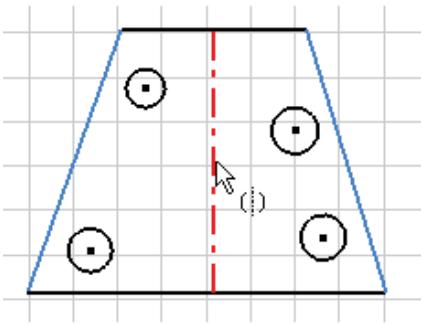

5. Continue selecting other sketch elements to apply the symmetric constraint.

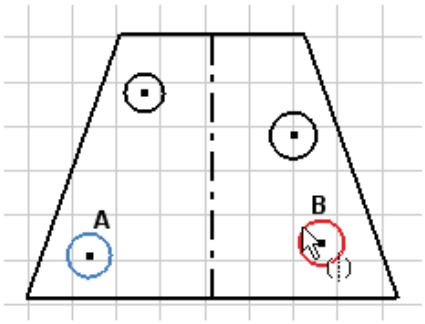

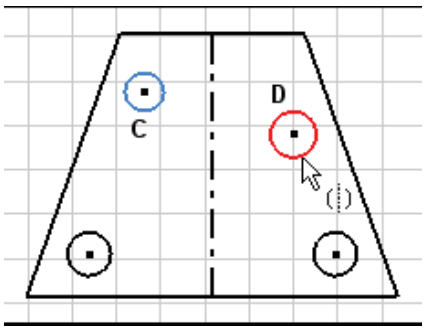

Showing and Deleting Constraints

As you create and constrain your 2D sketches, you may need to view and possibly delete some constraints. Using the Show Constraints tool, you can view the constraints applied to the selected geometry and if necessary, select the constraint(s) and delete them. You can also use the Show All Constraints tool to display the constraints on all the elements in your sketch.

The constraint glyphs for one piece of sketch geometry is shown in the following illustration. The illustration also shows that selecting a constraint glyph highlights the geometry it is associated with.

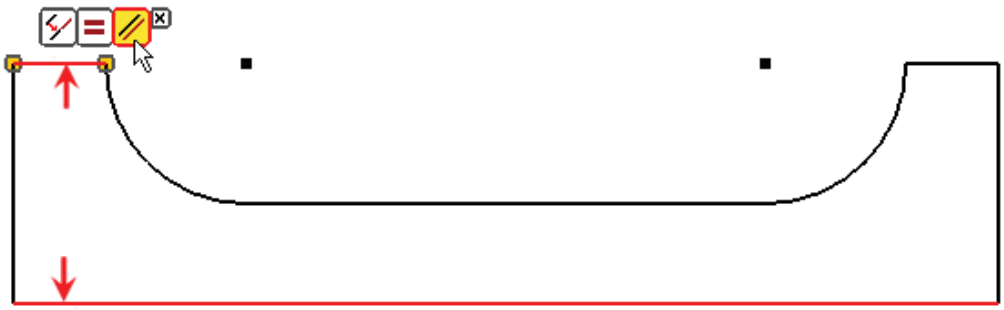

Showing Constraints on Multiple Objects

In the following illustration, the **Show Constraints** tool has been started. A selection window is used to select multiple objects in the sketch. The constraints for each object selected are displayed. The cursor is then moved to a single object to review the constraints related to that object.

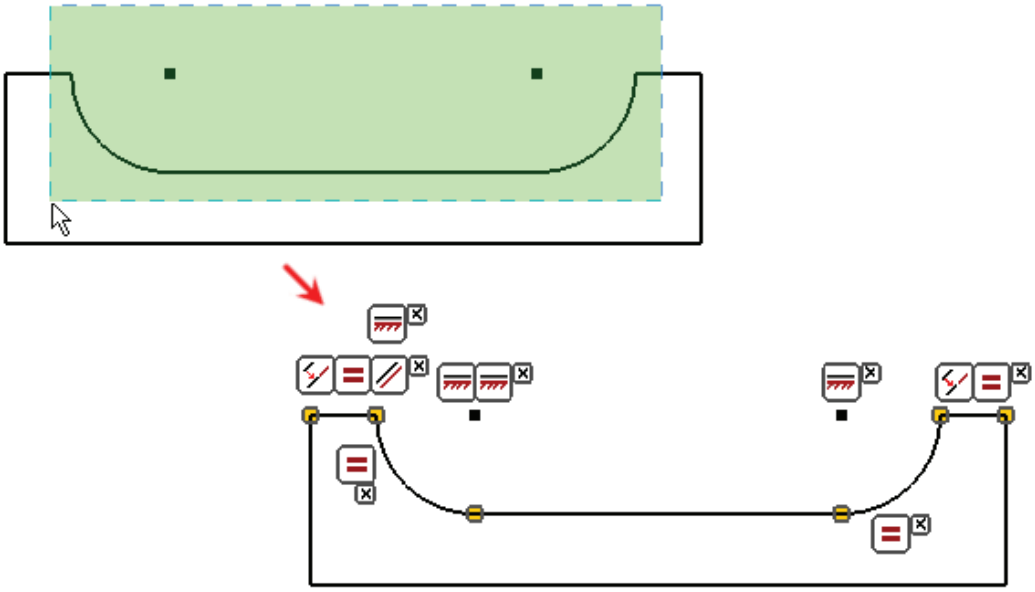

Constraint Glyph Features

You can use the **Constraint Glyphs** in the following ways.

Option	Method
Viewing constraints	Click the constraint glyph. The geometry referenced by the selected constraint glyph is highlighted.
Hide constraints	Right-click the constraint glyph, and click Hide.
Deleting constraints	Select the constraint glyph and press Delete, or right-click the selected constraint glyph and click Delete.

Show All Constraints

Using the **Show All Constraints** tool, you can see all constraints applied to the active sketch geometry. When you select the **Show All Constraints** tool, Show/Delete Constraint toolbars are displayed next to each sketch element. Pause over or select the constraint symbol to highlight the constrained geometry. Select the constraint symbol and press DELETE to delete the constraint.

Access

You can use the following methods to access the **Show All Constraints** tool.

Option	Method
Shortcut menu	Right-click in the graphics window and select **Show All Constraints** (sketch must be active).
Keyboard shortcut	**F8**: Show all constraints. **F9**: Hide all constraints.

The constraint toolbars are displayed next to each sketch element. Click and drag the bars on the toolbars to move them to another location.

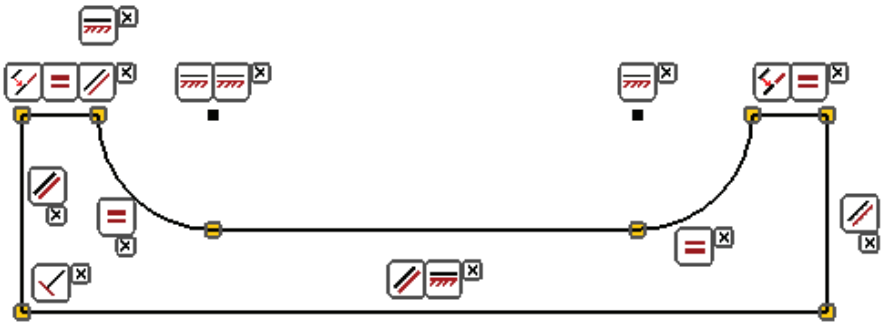

Guidelines for Successful Constraining

As you create sketch geometry, constraints are automatically applied. However, those constraints do not always completely represent your design intent. Therefore, you must add constraints or delete existing constraints.

Constraint Guidelines

The following list represents some guidelines to consider when you are placing constraints.

- **Determine sketch dependencies:** During the sketch creation process, determine how sketch elements relate to each other and apply the appropriate sketch constraints.
- **Analyze automatically applied constraints:** As you create sketch geometry, some constraints are automatically applied. After the sketch is created, you should determine whether any degrees of freedom remain on the sketch. If required, delete the automatically applied constraints and apply constraints to remove the degrees of freedom.
- **Use only needed constraints:** When you apply constraints to your sketch geometry, take into account the design intent and the degrees of freedom remaining on the sketch. It is not necessary to fully constrain sketch geometry in order to create 3D features. In some situations you may be required to leave sketch geometry under constrained. You can use the constraint-drag technique to see the remaining degrees of freedom on the sketch.

- **Stabilize shape before size:** Before you place dimensions on your sketch elements, you should constrain the sketch to prevent the geometry from distorting. As you place the parametric dimensions, the sketch elements update to reflect the correct size. By stabilizing the geometry with constraints, you are able to predict the effect the dimensions have on the sketch geometry. If necessary, use the fix constraint to fix portions of the sketch.
- **Identify sketch elements that might change size:** When constraining sketches, take into account features that may change as the design evolves. When you identify sketch features that may change, leave those features under constrained. When a feature is left unconstrained, the feature can change as the design evolves.

Guideline Examples

The following list illustrates and describes some basic constraint guidelines.

Determine sketch dependencies: In this illustration, the two short vertical line segments must remain perpendicular to the centerline, and the two diagonals must remain parallel to each other.

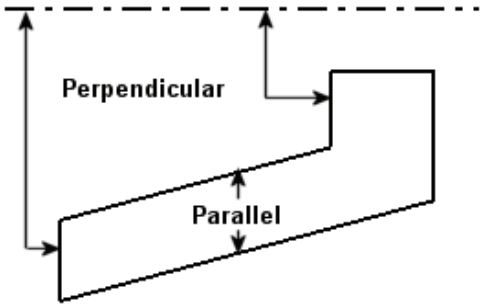

Analyze automatically applied constraints: In this illustration, the automatically applied constraints on the right-side vertical line and the lower diagonal line are being analyzed. The symbols (glyphs) on the toolbars indicate the types of constraints that have been applied. In this illustration the perpendicular and parallel constraints are highlighted.

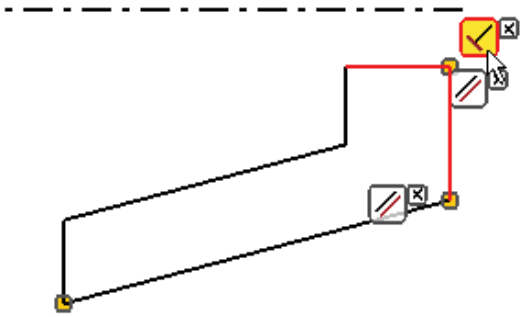

Use only needed constraints: In this illustration, the horizontal line has been intentionally left under constrained. This enables the designer to adjust the position between the horizontal line and the centerline.

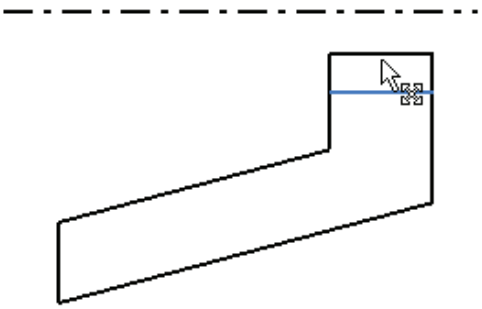

Stabilize shape before size: In this illustration, constraints are shown but no dimensions appear on this sketch. The constraints have been added to stabilize the sketch shape before dimensions are applied to control its size.

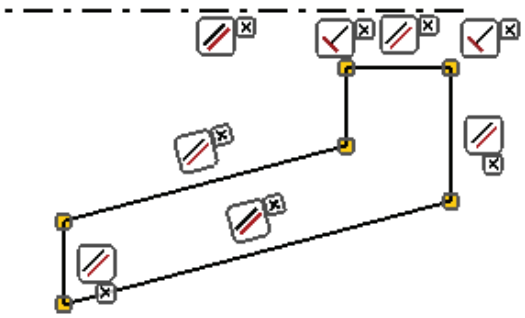

Identify sketch elements that might change size: In this illustration, the dimensions complete the constraint requirements. Notice how the short horizontal line below the centerline is not dimensioned for its position away from the centerline. This line's position has been identified as an element that may need to change, and thus is intentionally not dimensioned.

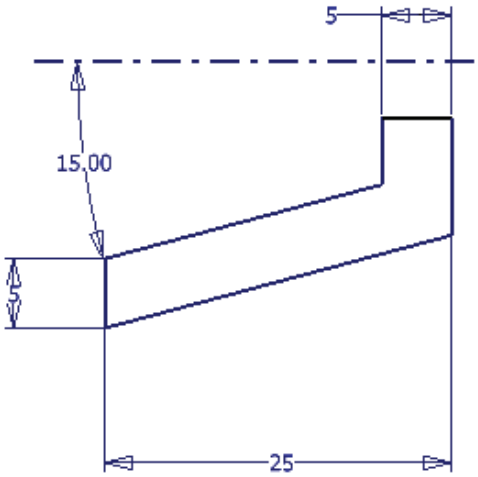

Toggling Sketch Degrees of Freedom Glyph Display

When you are constraining a sketch, if you understand how sketch geometry is free to move and rotate, it makes it easier to figure out your strategy for applying geometry and dimensional constraints. By understanding the purpose of sketch degree of freedom glyphs and how to display them, you will find that it is much easier to constrain the sketch geometry as you require.

In the following illustration, a sketch has all of its degrees of freedom glyphs being displayed for its sketch geometry. Based on these glyphs, you get a visual understanding of how each object or endpoint can move or rotate.

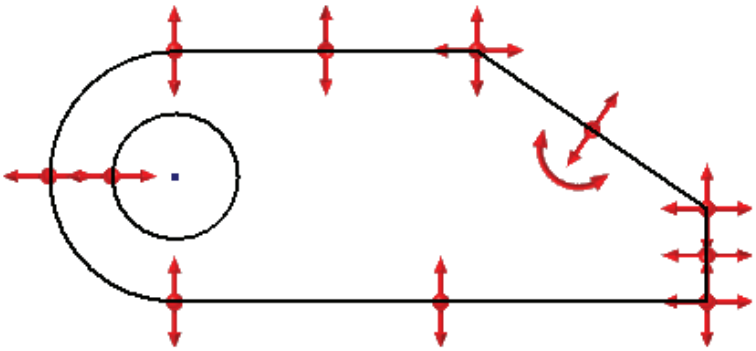

Sketch Degrees of Freedom

To visually identify how sketch geometry is under constrained, you can have degrees of freedom (DOF) glyphs display for all or selected geometry in a sketch. As you constrain the sketch, the visible DOF glyphs dynamically update to reflect the open degrees of freedom.

You toggle on and off the display of sketch geometry degrees of freedom glyphs in the active sketch by clicking the corresponding option in the shortcut menu. When there is no sketch geometry selected, the shortcut menu options are **Hide All Degrees of Freedom** and **Show All Degrees of Freedom**. These options toggle on and off the DOF glyph display for all geometry in the active sketch. If sketch geometry is selected when you right-click in the graphics window, you are then able to toggle on and off the display of the degrees of freedom glyph for just that geometry by clicking the Display Degrees of Freedom shortcut menu option.

In the following illustration, the same sketch is shown with sketch degrees of freedom glyphs before and after adding three dimensions. After adding the three highlighted dimensions, much of the geometry in the sketch had its degrees of freedom locked down. Degrees of freedom glyphs display only for the geometry that still has open freedom. The degree of freedom glyphs that are displayed update to show just the open freedom for the geometry.

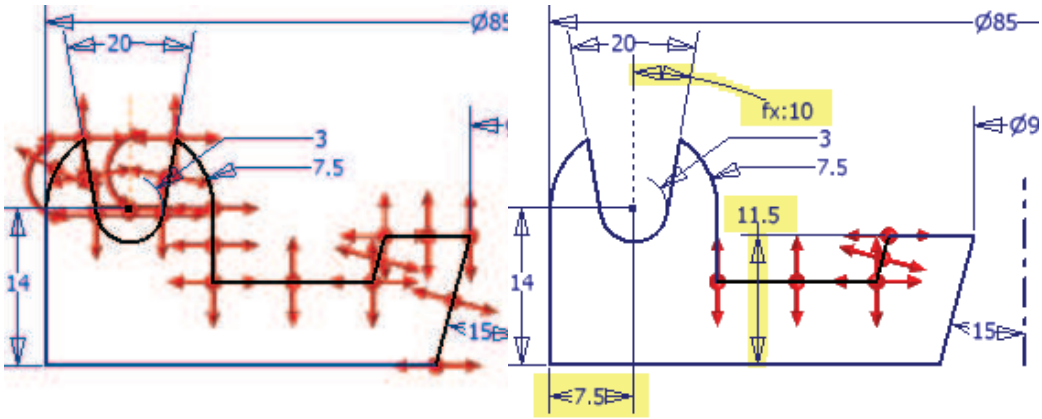

Procedure: Toggling Sketch Degrees of Freedom Glyph Display

The following steps give an overview of toggling on or off the display of all sketch degree of freedom glyphs in an active sketch.

1. Right-click in an open area in the graphics window.
2. In the shortcut menu, select **Hide All Degrees of Freedom** or **Show All Degrees of Freedom**.

Exercise: Constrain Sketches

In this exercise, you create and constrain sketch geometry. Using the concepts and procedures learned in this lesson, you create the slots on the Pillow Block component.

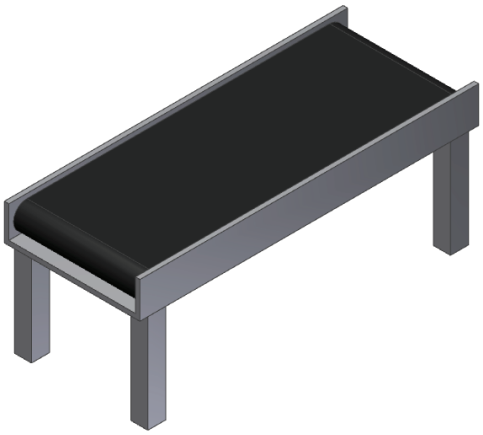

The completed exercise

1. Open **INV_003_Constrain_Sketches.ipt**.

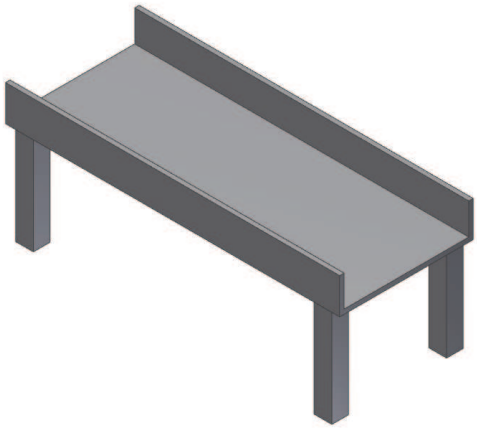

2. In the *Model* tab, click Sketch panel > **Create 2D Sketch**. Select the face on the part as shown.

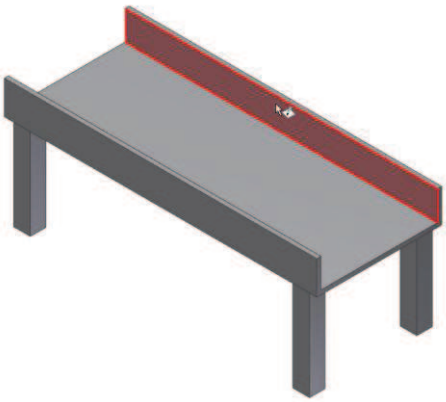

3. Start the **Two Point Rectangle** tool. Sketch a rectangle on the face as shown. Press ESC to exit the tool.

   Note: The XYZ Indicator has its text turned off in the following image.

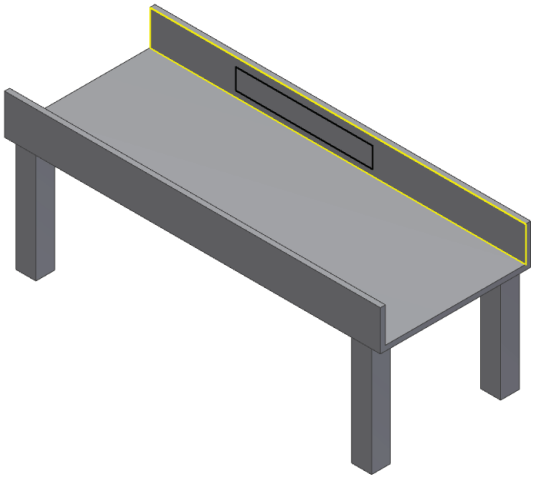

4. Start the **Centerpoint Circle** tool and create circles centered on the edge of the rectangle and coincident to the corners. Right-click in the graphics window and select **Done** when finished drawing.

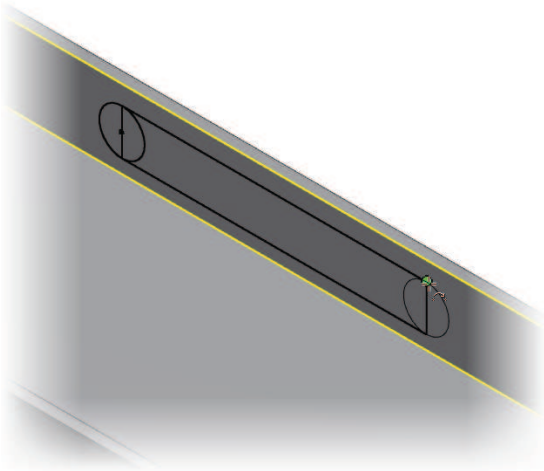

5. Start the **Vertical Constraint** tool and select the midpoint of the left edge and the centerpoint on the circle.

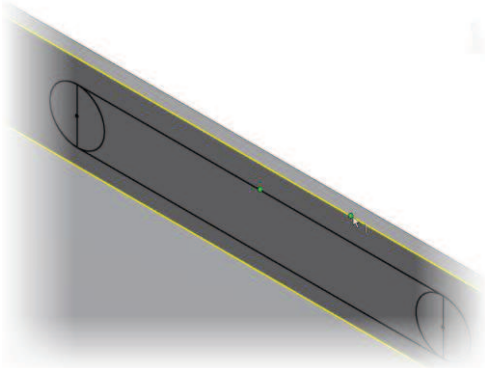

6. Start the Horizontal Constraint tool and select the midpoint of the face and the midpoint of the slot sketch.

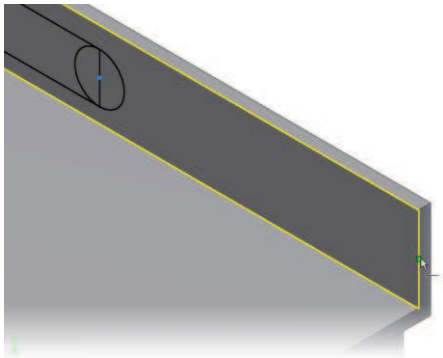

The slot sketch is now centered on the face.

7. Press ESC to exit the Horizontal Constraint tool.

8. Right-click anywhere in the graphics window, select **Show All Degrees of Freedom**. Observe that while the slot is constrained centered on the face, there are many degrees of freedom remaining.

Note: The material is set to glass in the following illustration to better display the DOF symbols.

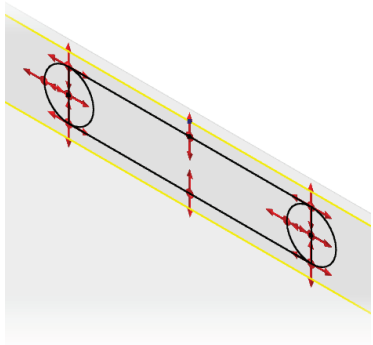

9. Right-click anywhere in the graphics window, select **Hide All Degrees of Freedom**.

10. Add dimension to constrain the size of the sketch geometry as shown.
Horizontal Dimension is **Length-7**.
Diameter Dimension is **6**.

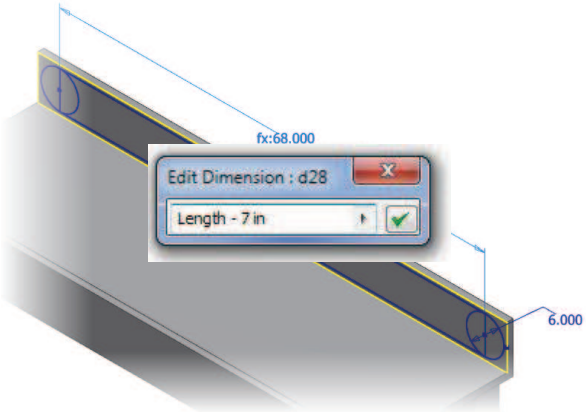

11. On the ribbon, click **Finish Sketch** to exit the sketch.

12. Start the **Extrude** tool and select inside each circle and the rectangle area of the sketch. Adjust the options in the dialog box as shown.
   - Change the Extents Option to **To Next**.
   - Click the **New Solid Command**.

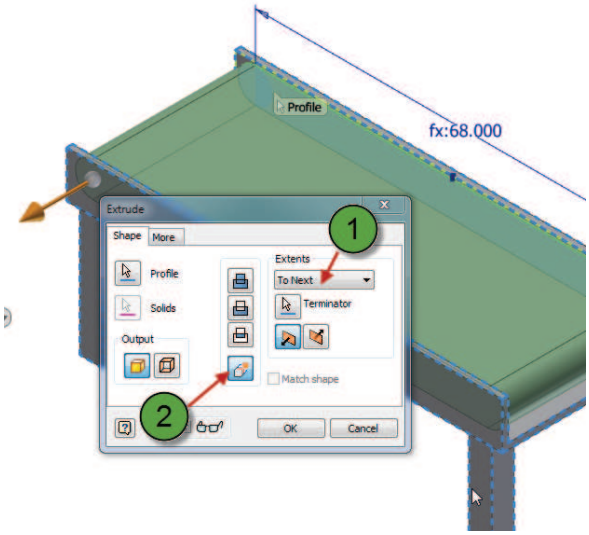

13. On the ViewCube, select the **Home** icon as shown.

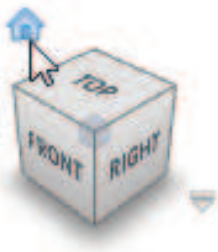

14. On the Browser, expand the Solid Bodies folder and right-click on **Solid 2**. Select properties and set the Body Color Style to **Black**.

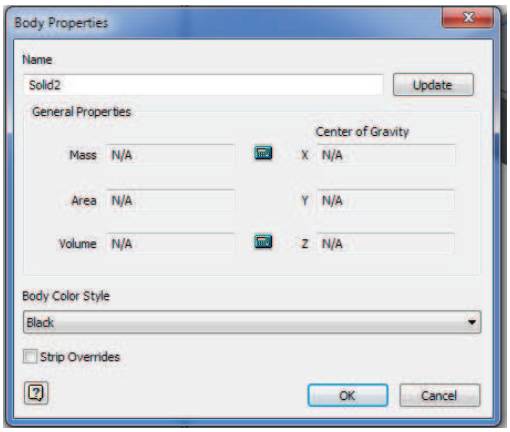

15. Close all files and do not save.

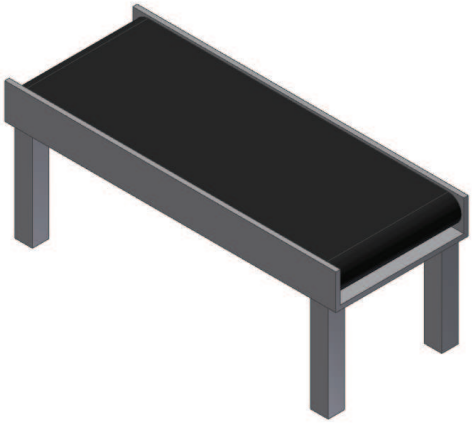

Lesson: Dimensioning Sketches

This lesson describes how to create and use various types of dimensions for your 2D sketch geometry.

Using dimensions for your sketches is a major aspect of constraining 2D geometry. While geometric constraints stabilize the sketch and make it predictable, dimensions size the sketch according to your design intent.

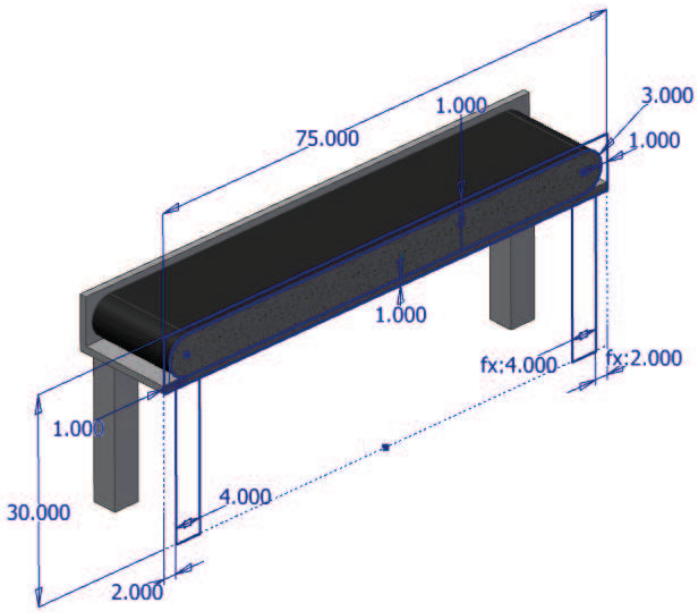

Objectives

After completing this lesson, you will be able to:

- Describe the function and properties of parametric dimensions.
- Create linear, radial, angular, and aligned dimensional constraints.
- Use additional options when applying dimensions.
- Describe best practices for dimensioning your sketch.

About Dimensional Constraints

You create dimensional constraints by adding parametric dimensions to your sketch. This is the final step in fully constraining your sketch geometry. When you apply a parametric dimension to a sketch element, the sketch element changes size to reflect the value of the dimension.

Various types of dimensions that you can apply to sketch geometry are shown in the following illustration.

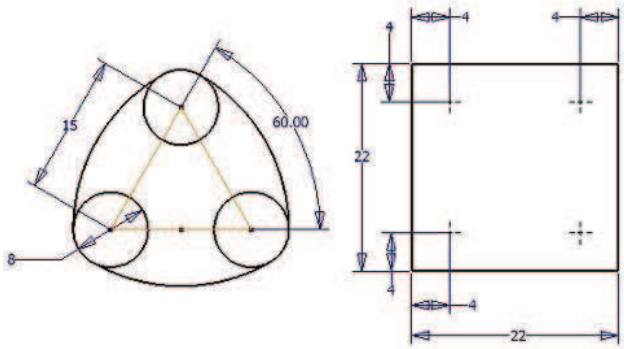

Definition of Parametric Dimensions

A parametric dimension is a dimension that, when placed on sketch geometry, determines the size, angle, or position of the geometry. Associative dimensions in nonparametric applications report the size, angle, or position of an object, whereas changes to parametric dimensions affect the object's size, angle, or position.

In the following illustration, when the dimension is placed, the initial value is 47.232. When the value is changed to 50 in the Edit Dimension dialog box, the width of the shape updates to reflect the new value. Note the d0 text in the title area of the Edit Dimension dialog box. This is the parameter name. Each time you place a parametric dimension, a unique parameter name is automatically assigned.

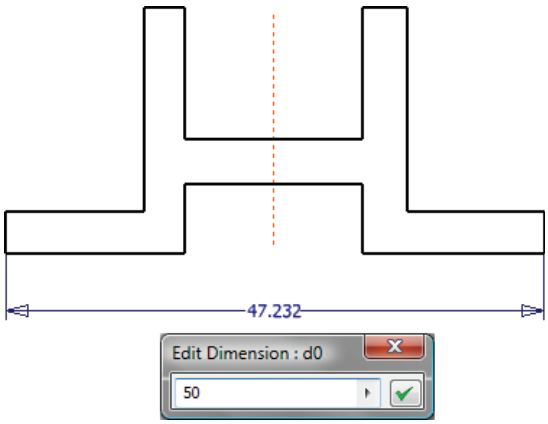

Unlike 2D CAD applications in which dimensions are simply numeric representations of the size of the geometry, in a parametric 3D modeling application, dimensions are used to drive the size of the geometry. With this technology, you can quickly change a dimension and immediately see how the change affects the geometry.

Example

Several types of parametric dimensions are available, but only one dimension tool is used to create them. The application places the appropriate type of dimension based on the geometry that you select. When you are placing dimensions, the shortcut menu displays additional options for placing the dimension.

Parametric Dimensions

The following illustration displays horizontal and vertical parametric dimensions and the shortcut menu, which enables you to choose the type of dimension to place.

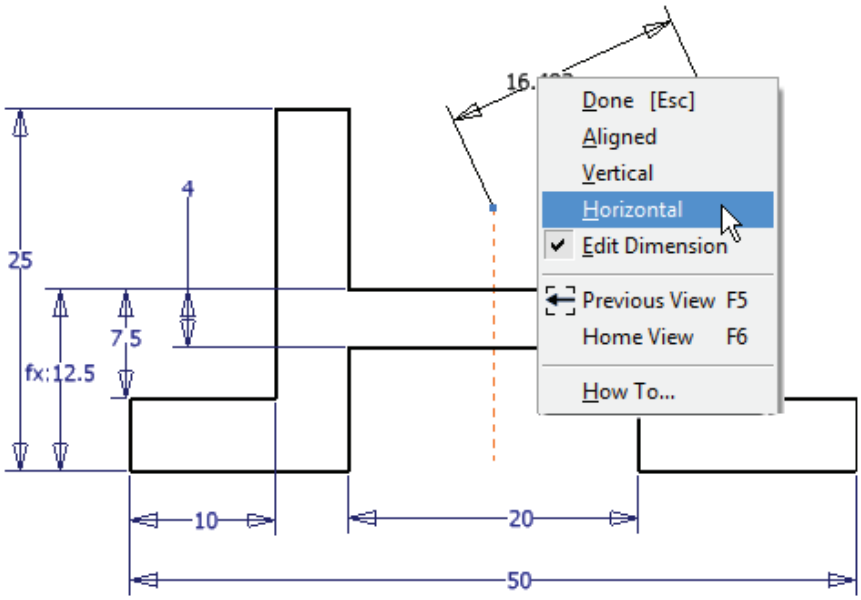

Creating Dimensional Constraints

You use the **General Dimension** tool to place dimensions on your sketch. You can produce linear, aligned, angular, radial, and diameter dimensions with this single tool.

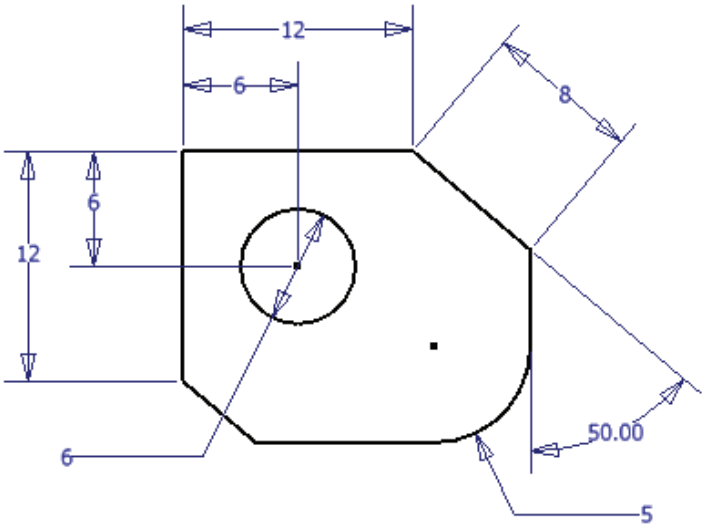

Access

General Dimension

Ribbon: *Sketch* tab > Constrain panel.

Keyboard Shortcut: **D**

Access

General Dimension

Ribbon: *Sketch* tab > Constrain panel.

Keyboard Shortcut: **D**

Procedure: Applying Linear Dimensions

The following steps describe how to apply a linear parametric dimension.

1. Click *Sketch* tab > Constrain panel > **General Dimension**.
2. Select the sketch element for the linear dimension and place the dimension.

3. Select the dimension and enter a new value.

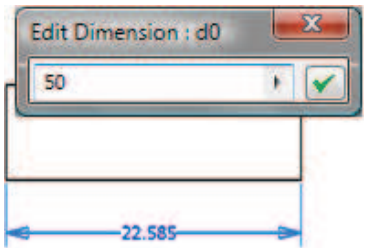

4. Press ENTER or click the green check mark on the Edit Dimension dialog box to have the geometry change to reflect the new dimension.

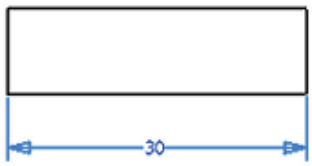

5. Right-click in the graphics window and select **Done** on the shortcut menu or continue placing additional dimensions.

Procedure: Applying Radial/Diameter Dimensions

The following steps describe how to apply radial or diameter parametric dimensions.

1. Start the **General Dimension** tool.
2. Select the sketch element for the radial/diameter dimension and place the dimension.

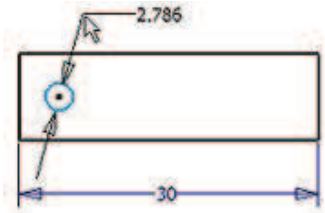

3. Select the dimension and enter a new value.

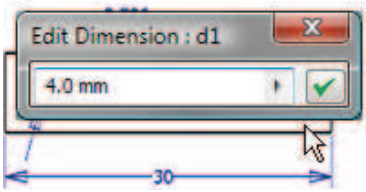

4. Press ENTER or click the green check mark on the Edit Dimension dialog box to have the geometry change to reflect the new dimension.

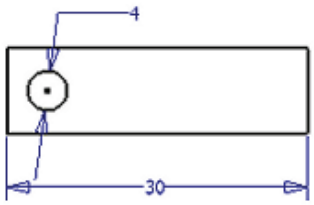

5. Right-click in the graphics window and select **Done** on the shortcut menu or continue placing additional dimensions.

Procedure: Applying Angular Dimensions

The following steps describe how to apply an angular parametric dimension.

1. Start the **General Dimension** tool.
2. Select each element for the angular dimension and place the dimension.
   Note: Select each element at any location other than their endpoints.

3. Select the dimension and enter a new value.

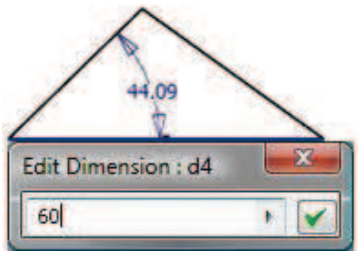

4. Press ENTER or click the green check mark on the Edit Dimension dialog box to have the geometry change to reflect the new dimension.

5. Right-click in the graphics window and select **Done** on the shortcut menu or continue placing additional dimensions.

Procedure: Creating Aligned Dimensions

The following steps describe how to apply an aligned parametric dimension.

1. Start the **General Dimension** tool.
2. Select the sketch element for the aligned dimension. Position the cursor near the geometry. Click when the Aligned Dimension icon is displayed.

3. Place the dimension.

4. Select the dimension and enter a new value.

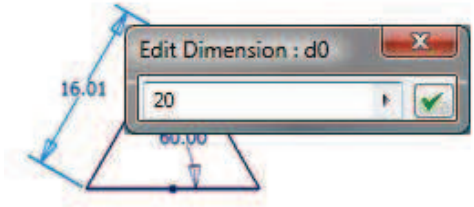

5. Press ENTER or click the green check mark on the Edit Dimension dialog box to have the geometry change to reflect the new dimension.

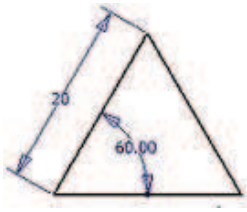

6. Right-click in the graphics window and select **Done** on the shortcut menu or continue placing additional dimensions.

> Instead of positioning your cursor near the geometry to cause the Aligned Dimension icon to be displayed, you can also select the element as you do when creating a linear dimension. Before positioning the dimension, right-click and set the dimension type as an aligned dimension by clicking Aligned on the shortcut menu.

Dimension Values and Units

You click a dimension to define its value. If required, you can include specific units of measurement such as millimeter, centimeter, meter, inch, and foot. It is not necessary to enter the suffix of the default unit.

If your part consists of multiple units of measurement you must enter the non-default unit suffixes. For example, if the default unit of measurement is millimeters, you would enter a value of 50 millimeters as **50** with no suffix. To specify a value of 50 centimeters in the same part, you would enter **50 cm**.

The application evaluates the values as you enter them. Values shown in red indicate an improper value or format, while values shown in black are considered to be valid.

Unit suffixes and parameters are case-sensitive. When you enter a unit suffix, it must be entered in lowercase. For example, 50 cm would be evaluated correctly, while 50 CM is not valid.

Edit Dimension Flyout Menu Options

When applying parametric dimensions, the following options are available in the Edit Dimension flyout.

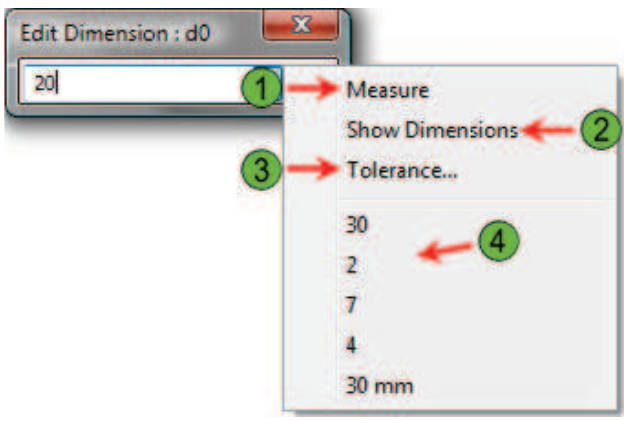

	Option	Description
1	**Measure**	Use to measure another sketch element or 3D feature. The resulting value is placed in the Edit Dimension dialog box.
2	**Show Dimensions**	Use to select a feature on the 3D part to display the underlying dimensions. After the dimensions are displayed, you can select a dimension for use in the existing dimension. The dimension being referenced can be used alone or in a formula.
3	**Tolerance**	Displays the Tolerance dialog box, which you can use to assign a tolerance to the parametric dimension.
4	**Recently Used Values**	Displays a list of recently used values. Select any value for use in the current dimension.

Additional Dimension Options

The following list represents additional options available on the shortcut menu when you place dimensions.

Option	Description
Edit Dimension	While placing a dimension, right-click in the graphics window, and on the shortcut menu click Edit Dimension. With this option set, the Edit Dimension dialog box is displayed automatically after each dimension is placed. 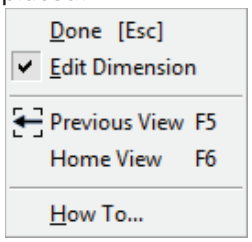
Radial/Diameter Dimension Options	When you place a dimension on an arc or circle, right-click in the graphics window and on the shortcut menu click Diameter or Radius to switch the default mode of the current dimension. When dimensioning an arc, the default mode is Radius. When dimensioning a circle, the default mode is Diameter. 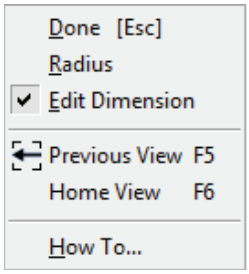 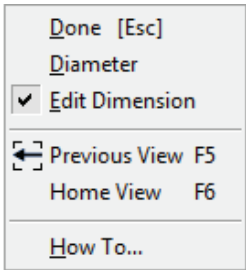

Option	Description
Linear Dimension Options	When you place a linear dimension to a line or two points at an angle, right-click in the graphics window, and on the shortcut menu click the desired dimension type. 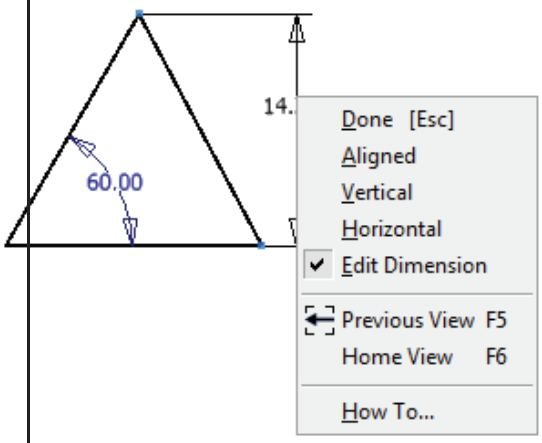
Dimensioning to Quadrants	When you need to place a dimension to the quadrant of a circle, place the cursor near the quadrant and look for the quadrant dimension glyph. Select the arc or circle at the point where the glyph is displayed. 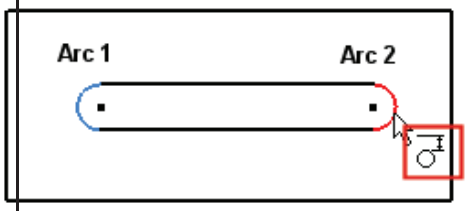

About Dimension Display and Relationships

When you apply dimensions to your sketch elements additional options are available that you can use to control the display of the dimensions. Also available are tools designed to assist you in creating dimensions referenced from other features and/or dimensions.

Dimension Display

After you apply dimensions to your geometry, you can control the visibility of all dimensions in the sketch and control the visual formatting of the displayed dimensions.

Being able to turn on and off the display of dimensions in a sketch means you have the flexibility when working with complex sketch geometry to decide how much information you see. Turning off the display of dimensions makes it easier to select the sketch geometry and review its general shape. When dimensions are not displayed and you make a sketch invisible, the dimensions remain off when you make the sketch visible again.

Using the optional display formats of Value, Name, Expression, Tolerance, and Precise Value can help you evaluate the structure of equations in relational dimensions, toleranced dimensions, and dimensions that contain equations.

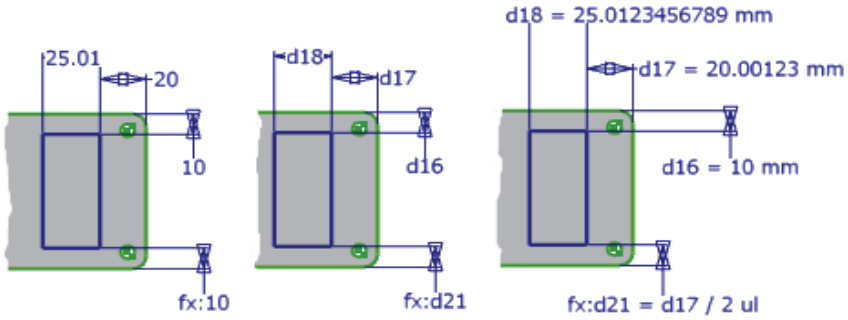

Menu	Description
Value	The default mode. Displays the current value of the dimension at the precision specified in the Document Settings dialog box. 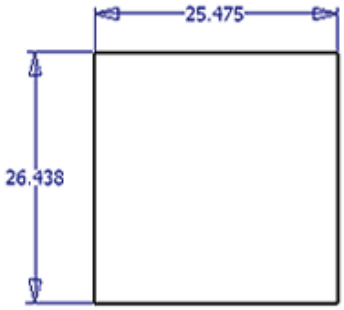
Name	Displays dimension names only. Dimension names are assigned automatically, or you can specify them in the Parameters dialog box. 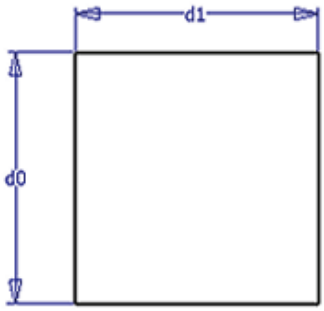

Menu	Description
Expression	Displays the dimensions as expressions. An expression can be as simple as d0 = 26.4375; or a formula can be used, such as d0 = d1/2. 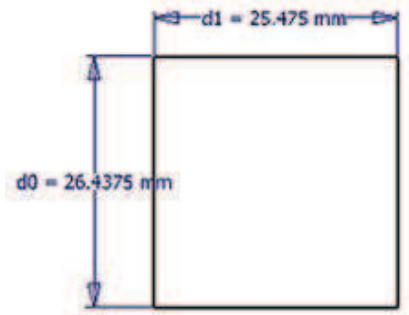
Tolerance	Displays the dimensions in a format associated with the specific type of tolerance applied. If a tolerance has not been applied to the dimension, there is no effect on the dimension display. 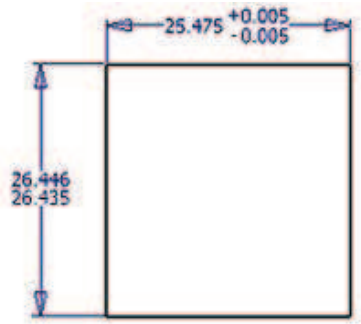
Precise Value	Displays the dimension using its exact numeric value, regardless of the Precision setting in the Document Settings dialog box. 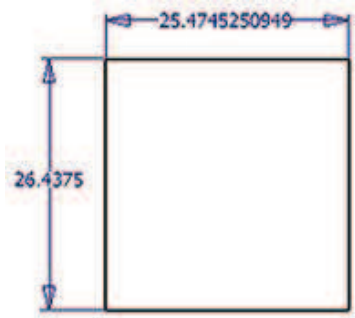

Procedure: Selecting the Dimension Display Mode

The following steps describe how to select the mode for displaying model dimensions.

1. With nothing selected, right-click in the browser or graphic window.
2. On the shortcut menu, select **Dimension Display** and then click the required option in the cascading menu.

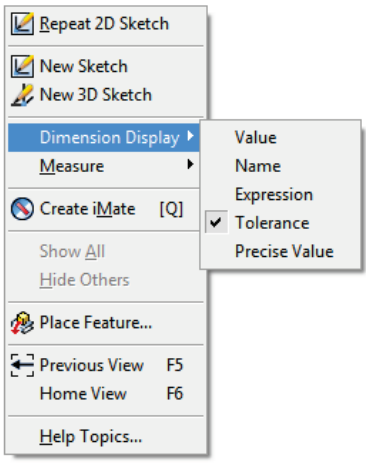

Referencing Other Dimensions

When you define the value of a dimension, you can reference an existing dimension by selecting the dimension in the graphics window. The dimension parameter name is automatically entered in the Edit Dimension dialog box.

The illustration shows dimension d18 being created equal to dimension d17. When you want to reference other dimensions in a new dimension, with the Edit Dimension dialog box open, select an existing dimension to reference. Your cursor changes to indicate that you are referencing an existing dimension. When you select the existing dimension, the parameter name of the dimension you selected is entered in the Edit Dimension dialog box. A dimension that references another dimension has fx: preceding its value.

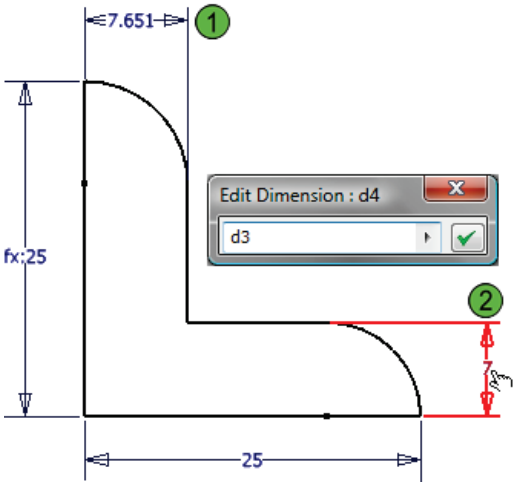

1 Dimension being created.

2 Dimension being referenced.

Dimensions Stored as Parameters

Each dimension you create is automatically named and stored as a parameter in the current part file. Selecting the Parameters tool on the ribbon, *Manage* tab, displays the Parameters dialog box which lists the model parameters.

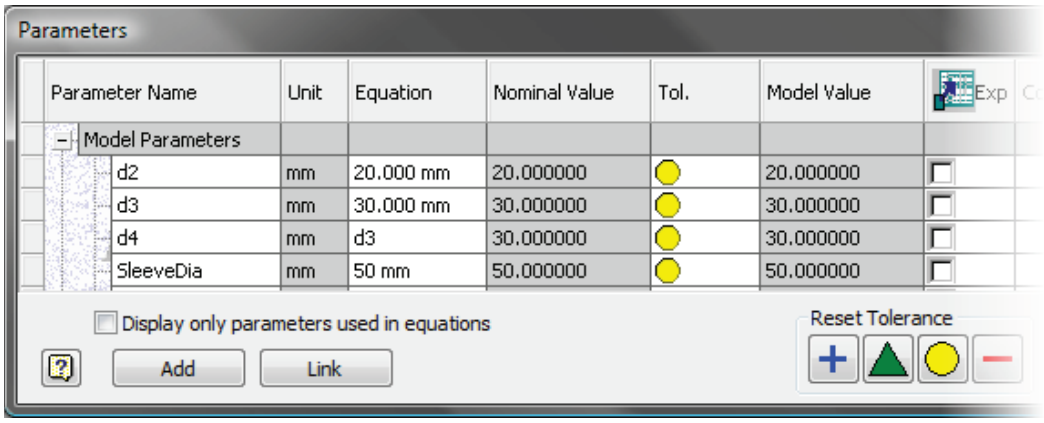

Note the parameter names d0 and d1. These names are generated each time a dimension is placed. If you delete a dimension, its parameter is also deleted and the original dimension name is not used again in the current part file. You can rename the default dimension names and modify their values in the Parameters dialog box. In the previous illustration the parameter d2 is renamed to **SleeveDia**.

Quickly Change Parameters

You can change parameters on the fly to improve your productivity. While creating dimensions, for example, you can enter **Length=20** and the current parameter is renamed to Length and the value is set to 20.

Guidelines for Dimensioning Sketches

Applying parametric dimensions is straightforward because you use a single command. Following these guidelines assures that dimensions are properly applied to your sketch.

Guidelines for Dimensioning Sketches

Consider the following guidelines when adding dimensions to your sketch:

- Use geometric constraints when possible. For example, place a perpendicular constraint instead of an angle dimension of 90 degrees.
- Place large dimensions before small ones.
- Incorporate relationships between dimensions. For example, if two dimensions are supposed to be the same value, reference one dimension to the other. With this relationship, if the first dimension changes, the other dimension changes as well.
- Consider both dimensional and geometric constraints to meet the overall design intent.

These guidelines are not presented in any particular order and you do not apply all of them on every sketch.

Example of Relationships Between Dimensions

Building relationships between dimensions captures your design intent. In this illustration, the intent is for the circle to always remain centered on the part. Building this dimensional relationship ensures that if the sketch width or length changes, the hole also moves in order to remain centered on the sketch. The dimension display is set to expression for clarity.

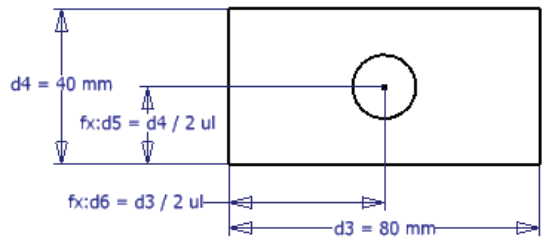

In the following illustration, the length is changed. Notice how the hole moved to maintain its centered position.

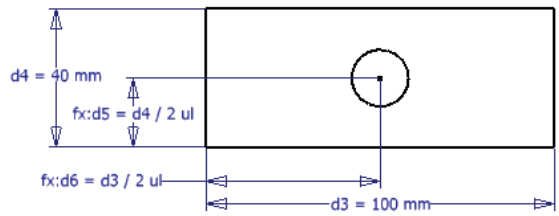

Without a dimensional relationship, a hole that was originally centered does not adjust if the length is changed.

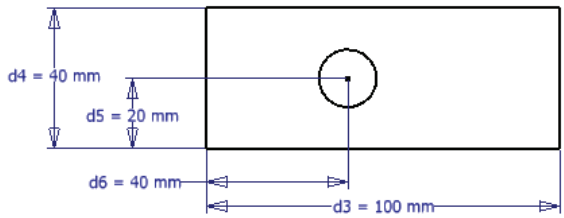

Exercise: Dimension Sketches

In this exercise, you apply dimensions to a sketch. Using the techniques learned in this lesson, you apply a variety of parametric dimensions to the sketch geometry.

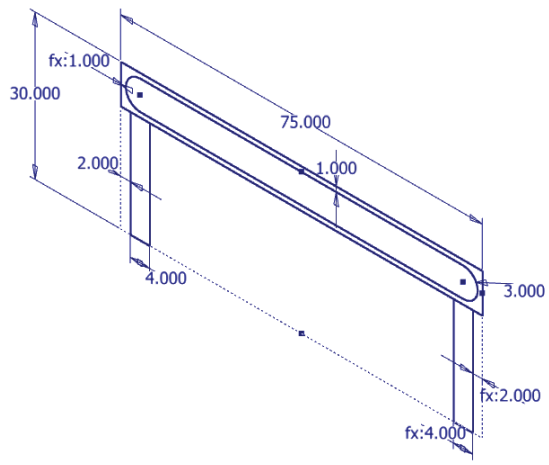

The completed exercise

1. Open **INV_004_Dimensions.ipt**.

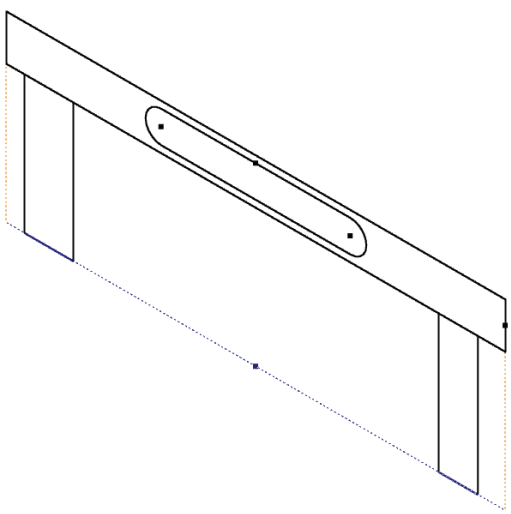

2. To rotate the view:
   - On the ViewCube, click Front.
   - Click the arrow to rotate the view counterclockwise 90 degrees.

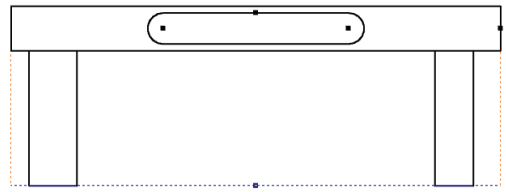

3. Constrain drag the sketch on various elements to examine the constraint conditions.

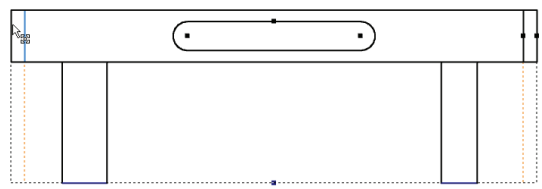

3. In the browser, double-click Sketch1 to activate the sketch.

4. Place an overall parametric dimension.
   - Start the General Dimension tool.
   - Select the top left and right corners of the sketch.
   - Place the dimension and select it.
   - In the Edit Dimension dialog box, enter **Length=75**.
   - Click the green check mark.

5. Set the Edit Dimension dialog box to automatic.
   - With the General Dimension tool still active, right-click in the graphics window.
   - Click Edit Dimension.
   - The Edit Dimension dialog box is displayed automatically as you place dimensions.

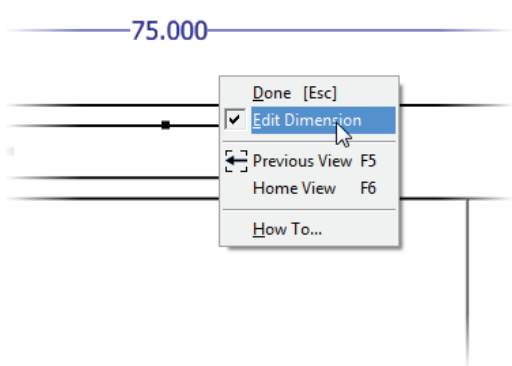

6. Add a vertical dimension in relation to the overall dimension just created.
   - Select the lower-left and upper-left corners of the sketch.
   - In the Edit Dimension dialog box, enter **Height=30**.
   - Click the green check mark.

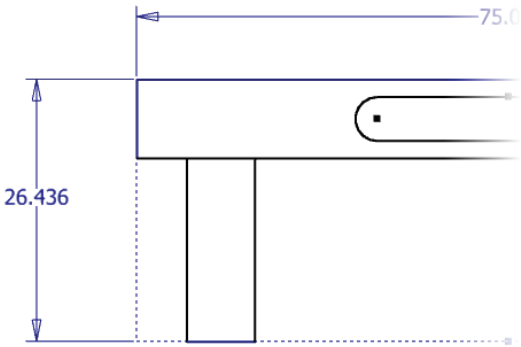

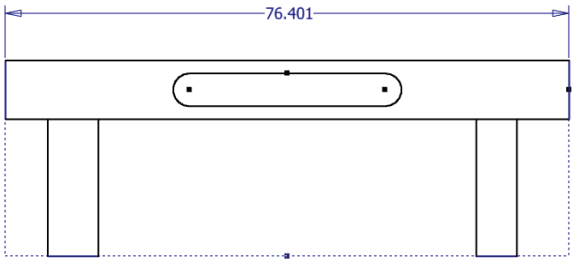

7. Add a horizontal dimension the controls the size of the legs.
   - Check to make sure that the General Dimension tool is still active.
   - Select points as indicated.
   - In the Edit Dimension dialog box, enter **Leg_W=4**.
   - Click the green check mark.

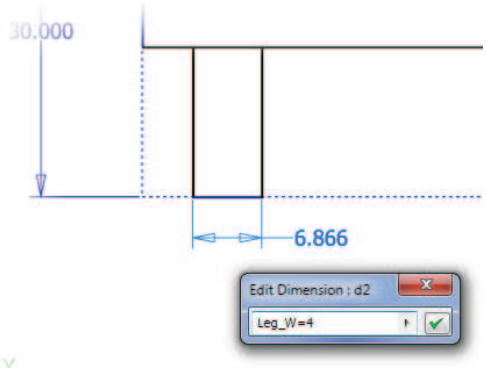

   - Add the horizontal dimension to the other leg. Instead of entering a numeric value, click the previous dimension value to create a parametric relationship.

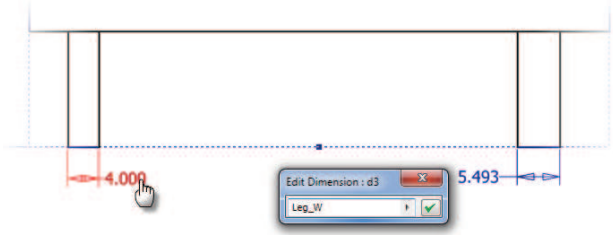

8. Add additional dimensions as shown. Create parametric relationships to ensure symmetrical design intent. Do not be overly concerned with placement as you create the dimensions. You can drag the dimensions to locations after all of them have been created. Double-click each dimension and adjust its value to those in the following illustration if necessary.

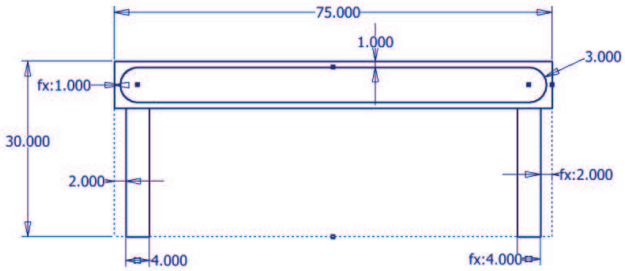

9. On the ribbon, click **Finish Sketch** to exit the sketch.
10. On the ViewCube, click the Home icon.

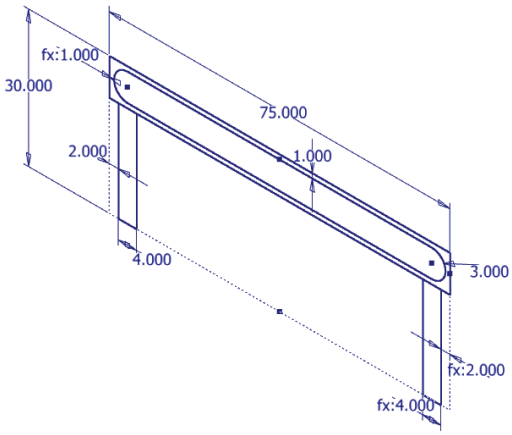

11. Close all files. Do not save.

Chapter Summary

Properly constrained 2D sketches are the fundamental building blocks of parametric parts. By being able to fully constrain the size and shape of your sketches, you can achieve the highest quality parametric part designs.

Having completed this chapter, you can:

- Use sketch tools to create 2D sketch geometry.
- Use geometric constraints to control sketch geometry.
- Apply parametric dimensions to your sketch geometry.

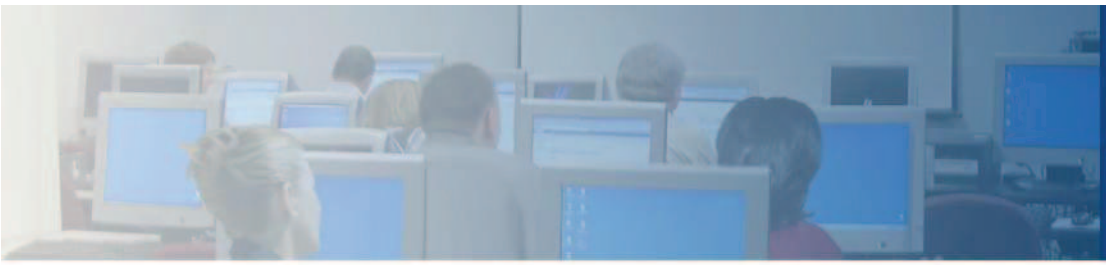

Chapter

7

Basic Shape Design

In earlier lessons, you learned how to create and constrain 2D sketches. In this chapter, you are introduced to the fundamentals of basic shape design by learning how to extrude, revolve, and sweep 2D sketches to create 3D features. This chapter also covers the proper techniques for adding multiple sketched features to your 3D design, creating more intelligent sketches by referencing existing part edges and using construction geometry, and modifying your parametric parts at any stage of the design process.

Objectives

After completing this chapter, you will be able to:

- Create features using the Extrude and Revolve tools.
- Use reference and construction geometry.
- Use the browser and shortcut menus to edit parametric parts.
- Create, locate, and utilize work features to perform modeling tasks.

Lesson: Creating Basic Sketched Features

Two basic types of features exist: sketched features and placed features. The term *sketched feature* refers to a 3D feature that is based on a 2D sketch. The term *placed feature* refers to a 3D feature that you place on the existing faces and edges of the part, and which does not require a sketch. This lesson describes sketched features and how to create them using the Extrude and Revolve tools.

Because most 3D models include some combination of extruded and revolved features, a basic understanding of how to create them is essential to successful model creation.

The following illustration shows a 3D conveyor model that was created using multiple extrusion features.

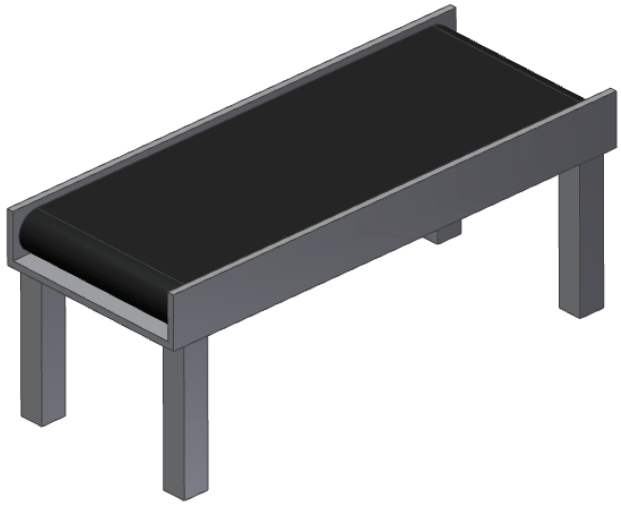

Objectives

After completing this lesson, you will be able to:

- Define sketched features and their attributes.
- Use the Extrude tool to create extruded features.
- Use the Revolve tool to create revolved features.
- Use the Operation and Extent termination options when adding 3D features.
- Orient sketch planes based on other planes or faces.

About Sketched Features

You create most 3D models by combining multiple extruded and revolved features. You start by creating a 2D sketch that represents the basic shape of the part and then use different feature creation tools to turn that 2D sketch into a 3D feature.

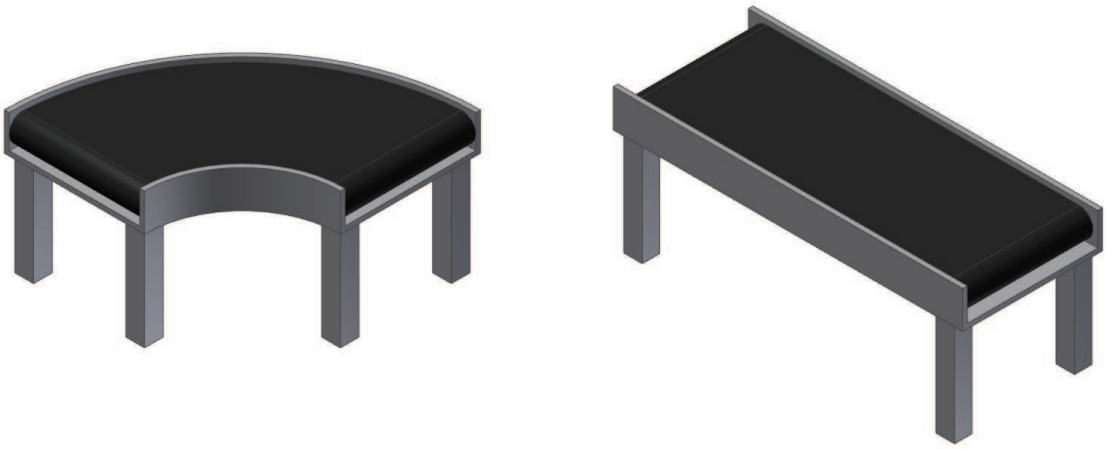

Definition of Sketched Features

Sketched features are 3D features that are created from an existing 2D sketch. These features serve as the basis for most of your designs. When you create a sketched feature, you begin by first creating the sketch or profile for the 3D feature. For simple sketched features, this profile usually represents a 2D section of the 3D feature being created. For more complex sketched features, multiple sketches can be created and used within one sketched feature.

The first sketch feature you create is considered the base feature. After you create the base feature, additional sketched and/or placed features are added to the 3D model. As you add the additional sketched features, options are available that control whether the secondary sketched features add or remove material from the existing 3D geometry.

Sketched Feature Attributes

The key attributes of sketched features include the following:

- An unconsumed sketch is required (not used by another feature).
- Sketches can be used for both base and secondary features.
- The result of the sketched feature can add or remove mass from the 3D geometry.

Consumed and Unconsumed Sketches

When you create a new part, the initial sketch is used as the basis of your 3D geometry. After the sketch is created, you can create a sketched feature, an extrusion for example, to create 3D geometry from the initial sketch. When you create the 3D sketched feature, the sketch itself becomes consumed by the 3D sketched feature. Prior to this time, the sketch is considered unconsumed and can be used for any sketched feature.

Unconsumed Sketch

The following illustration shows the initial sketch before it is consumed by the sketched feature.

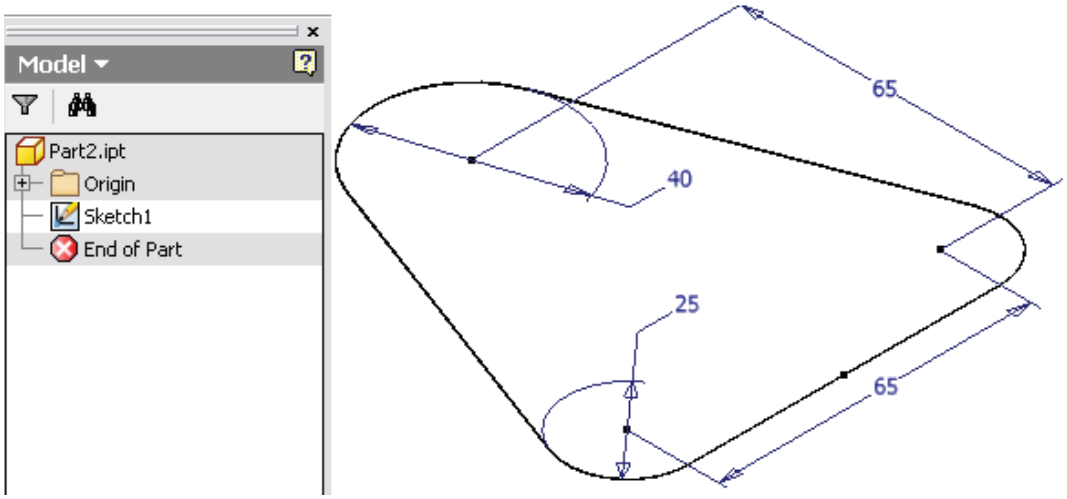

Consumed Sketches

The following illustration shows sketches consumed by the sketched features. In the browser, the sketches are nested below the sketched feature in which they were used.

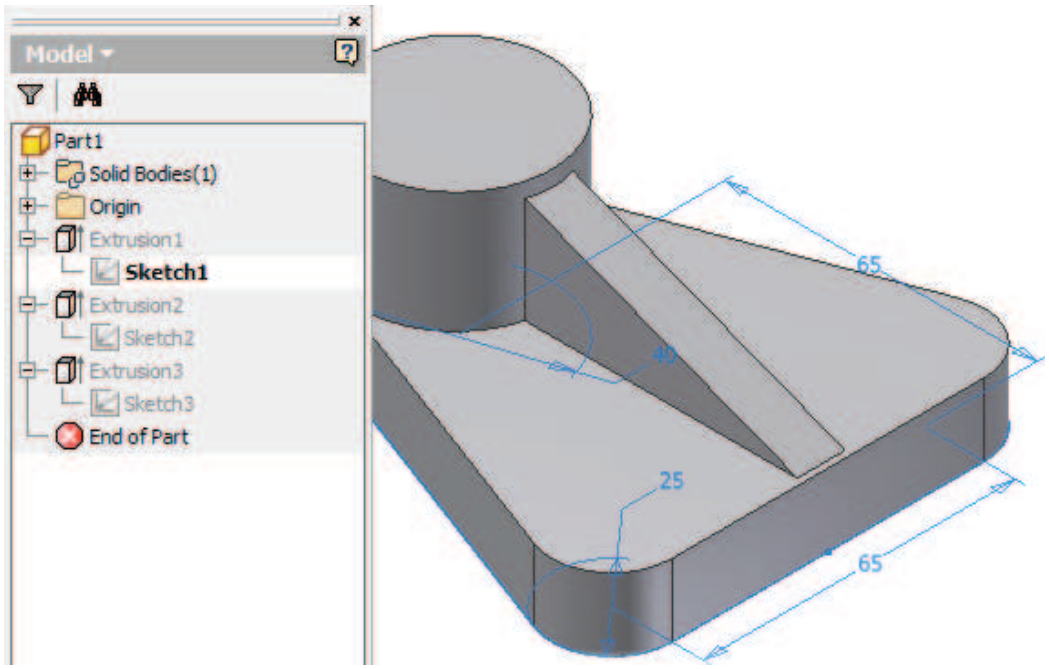

Typical Sketched Feature Creation

This illustration represents a typical workflow for creating a 3D part based upon sketched features. The base sketch is created, which is used to create the base feature. Secondary sketches and features are then added to the 3D model.

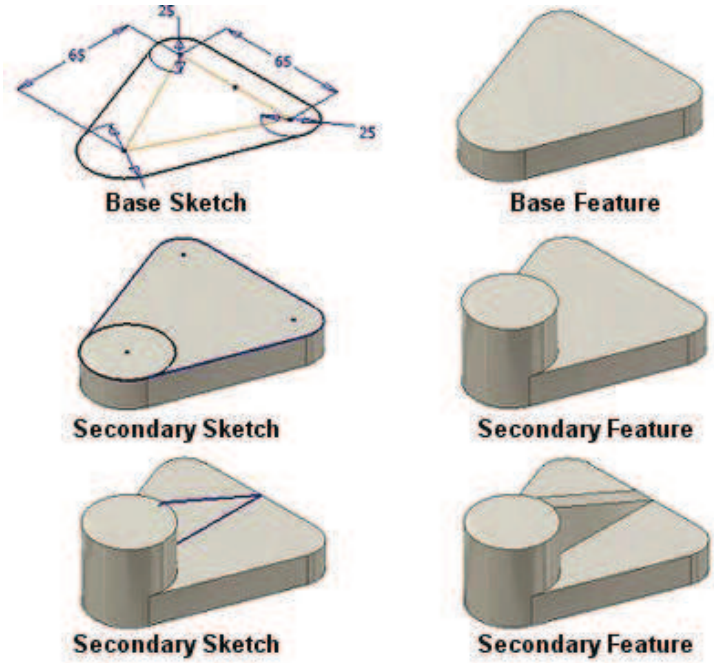

Creating Extruded Features

You use the Extrude tool to create extruded features from existing sketch profiles. Considered sketched features, extruded features require an unconsumed and visible sketch to be available. If the sketch contains a single closed profile, that profile is selected automatically when you start the Extrude tool. If the sketch contains more than one profile, you are required to select the profiles to be included in the extruded feature.

Examples of Simple Extruded Profiles

In this example, the sketch contains multiple closed loop profiles selected to form a single extruded feature.

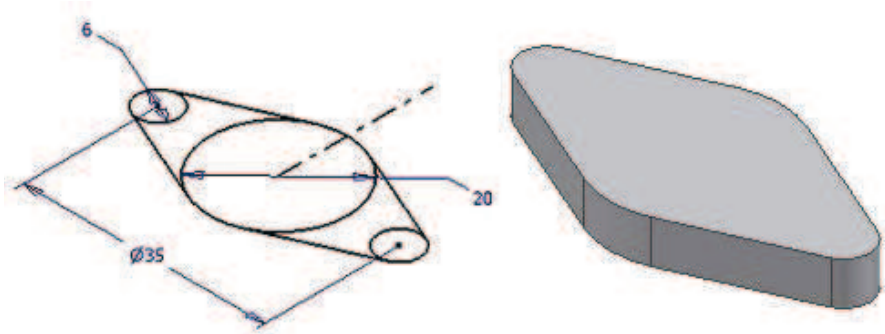

In this example, the sketch contains multiple closed loop profiles selected to form a single extruded feature with holes.

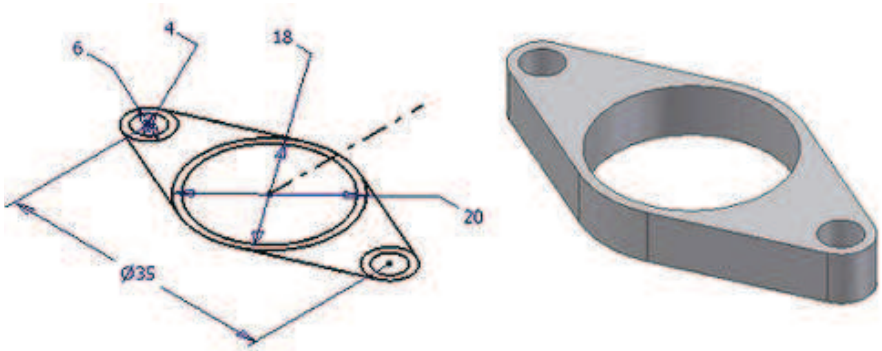

Access

Extrude

Ribbon: *Model* tab > Create panel

Toolbar: **Part Features**
Keyboard Shortcut: **E**

Extrude Options

The Extrude dialog box is displayed when you start the Extrude tool.

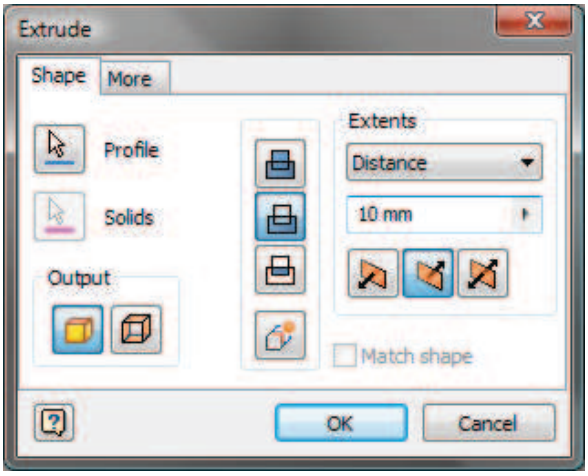

The following features and options are available in the Extrude dialog box:

Dialog Box Access	Option	Description
	**Profile**	Use to select geometry to be included in the extrusion. A red arrow indicates that no profiles have been selected for the extrusion feature.
	**Solids**	The Solids selection tool is only active when the part contains more than one solid body. Use to determine to which solid body the feature is going to be applied.
	**Output**	Use to specify the desired output option, Solid or Surface.
	**Direction**	Select the direction icon or click and drag the preview of the extrusion in the desired direction.
	**Operation**	Use to create an initial feature or add volume to models with Join. Remove volume from models with Cut. Create a new feature from shared volume of two features with Intersect.
	**New Solid**	Use to create the extruded feature as a new solid body instead of using boolean operations to join, cut, or intersect the feature with an existing solid body.

Procedure: Creating an Extruded Feature

The following steps describe how to create an extruded feature.

1. Create a new sketch.

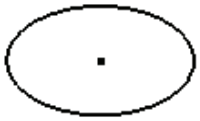

2. Click *Model* tab > Create panel > **Extrude**.
3. In the Extrude dialog box, adjust the options as required.

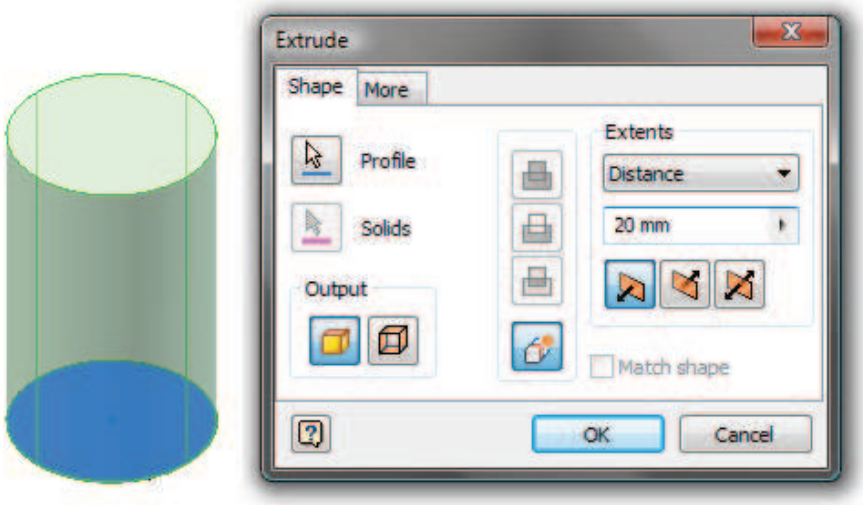

4. The extruded feature is created.

Creating Revolved Features

You use the Revolve tool to create revolved features from existing sketch profiles. You can revolve the profile at a full 360 degrees or at a specified angle. The Revolve tool requires an unconsumed and visible sketch to be available. When you start the **Revolve** tool, if the sketch contains a single closed profile, that profile is selected automatically.

Examples of Simple Revolved Profiles

In the following illustration, the sketch contains a closed profile and one centerline. When you start the Revolve tool, the centerline is automatically selected as the axis of revolution.

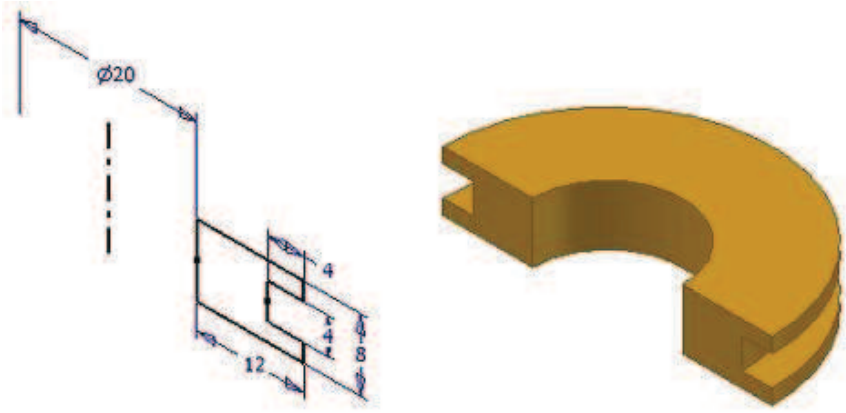

In the following illustration, the sketch contains a single closed loop profile, reference geometry, and one centerline. The profile is revolved with the Cut feature relationship.

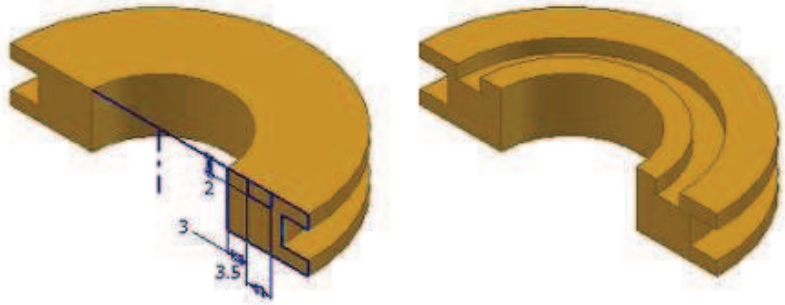

Access

Revolve

Ribbon: *Model* tab > Create panel

Toolbar: **Part Features**
Keyboard Shortcut: **R**

Revolve Options

The Revolve dialog box is displayed when you start the Revolve tool.

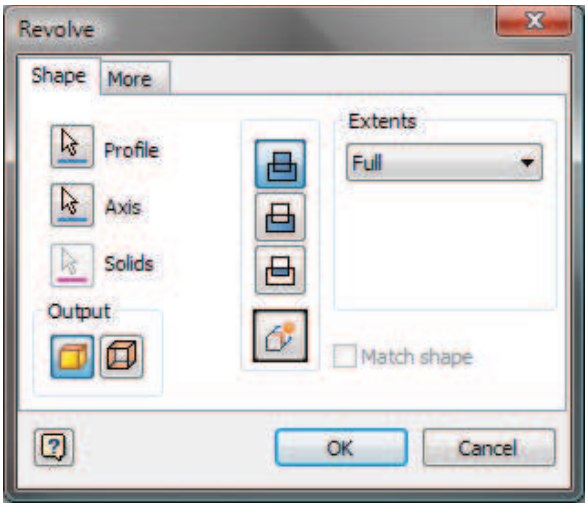

The following features and options are available in the Revolve dialog box:

Dialog Box Access	Option	Description
	**Profile**	Use to select geometry to include in the revolved feature. A red arrow indicates that no profiles have been selected for the revolved feature.
	**Axis**	Use to select the line segment to use as the axis for the revolve feature. **Tip:** If the sketch contains a centerline, it is selected automatically as the axis.
	**Solids**	The Solids selection tool is only active when the part contains more than one solid body. Use to determine to which solid body the feature is going to be applied.
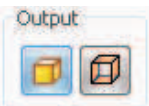	**Output**	Use to specify the desired output option, Solid or Surface.
	**New Solid**	Use to create a new solid body from the revolved feature.
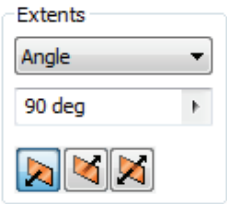	**Angle**	Use to specify an angle and direction for the revolution.
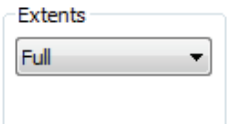	**Full**	Use to revolve the profile 360 degrees.

Facts About Revolved Features

- If the sketch contains a centerline, it is selected automatically as the axis for the revolved feature.
- If the sketch contains more than one profile, you are required to select the profiles to include in the feature.
- If the profile being revolved is closed, you can choose between a solid or surface for the result of the revolution.
- If the profile being revolved is open, the revolution results in a surface.

Procedure: Creating a Revolved Feature

The following steps describe how to create a revolved feature.

1. Create a new sketch containing a profile to revolve. If the profile is being revolved about a centerline, consider using the Centerline style on the line segment.

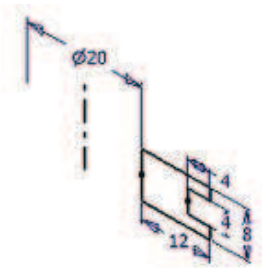

2. Click *Model* tab > Create panel > **Revolve**. In the Revolve dialog box, adjust the options as required.

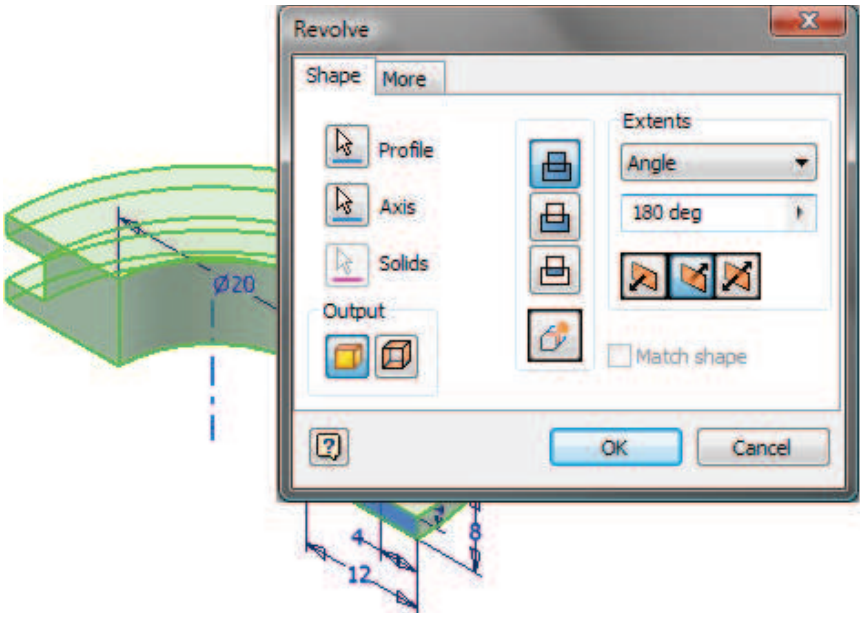

3. Create additional sketch geometry as required.

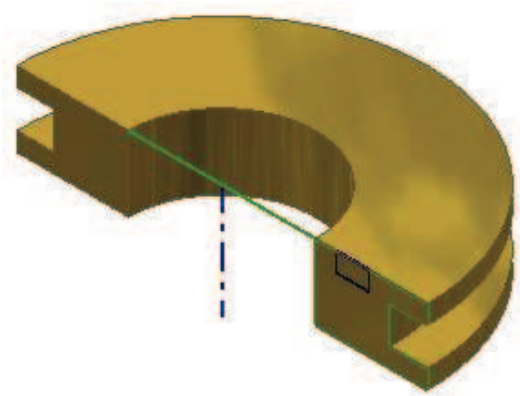

4. Start the **Revolve** tool. Select the geometry to be included in the revolved feature. Adjust the options as required.

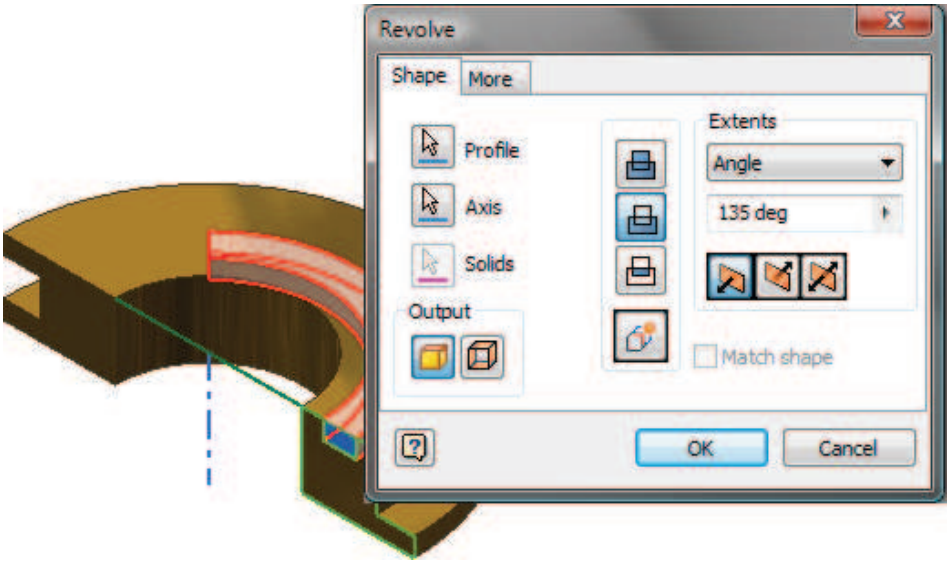

Specifying Operation and Extents

You use the Join, Cut, and Intersect operations to control how the feature you are creating affects existing features or Solid Bodies. By default, the Cut and Intersect operations are not available with base features and the New Solid button is automatically activated since the base feature will by default create a New Solid.

You use the Extents options to define the termination of a feature. For example, you can extrude a 2D sketch a specific distance or you can terminate the feature on an existing face of the model.

Example of Operation and Extents

In the following example, multiple sketched features with different operations and extents were used to define the shape of the part.

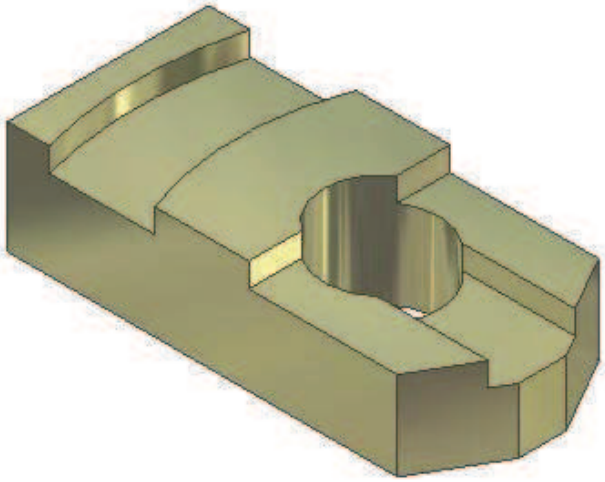

Specifying Operation: Join, Cut, and Intersect

When you create sketched and placed features, you can adjust operation options to control the effect of the current feature on existing features. These operations are not available for the first feature of the part.

The feature relationship options are available when using Extrude, Revolve, Loft, Sweep, and Coil. The following illustration shows an example of these options in the Extrude dialog box.

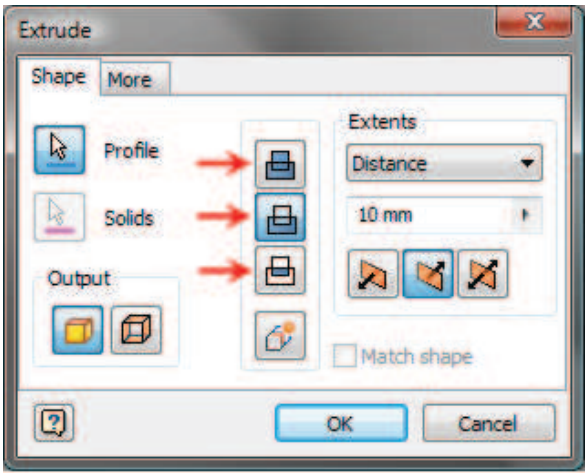

Use the following options with the **Extrude** tool.

Dialog Box Access	Option	Description
	**Join**	This option joins the result of the extruded feature being created to existing part geometry. Using this option results in material being added to the existing part. A green preview indicates material is being added. 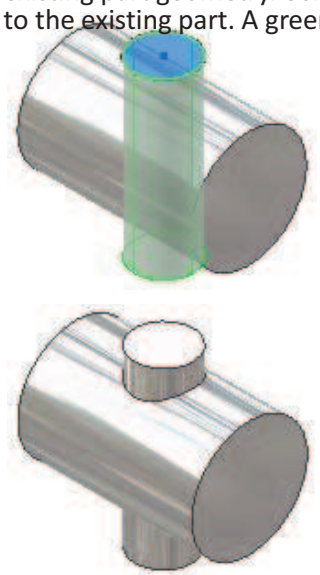
	**Cut**	This option cuts the result of the extruded feature being created from the existing part. Using this option results in material being removed from the existing part. A red preview indicates material is being removed. 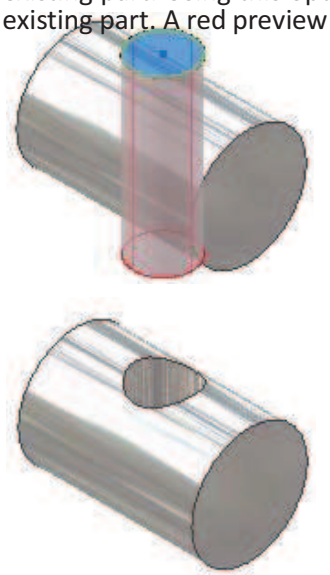

Dialog Box Access	Option	Description
	**Intersect**	This option removes material from the existing part by comparing the volume of the existing features and the feature being created and leaving only the volume shared between the existing features and the new feature. A blue preview indicates an Intersect relationship. 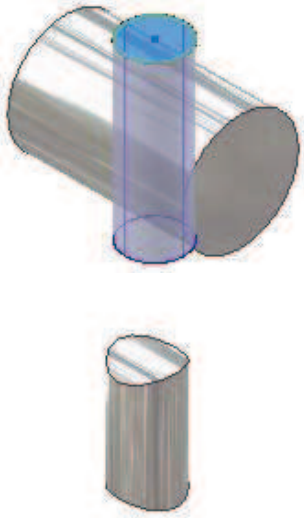

New Solid – Best Practice for Factory Assets.

Using the New Solid option will create a new solid body from the feature definition. Solid Bodies allow designers to create a single part model that represents multiple components. The Conveyor part model in the following image uses multiple solid bodies to represent the frame and belt of a conveyor in a single part file. This practice will greatly reduce the overall number of parts in the final Factory Assembly.

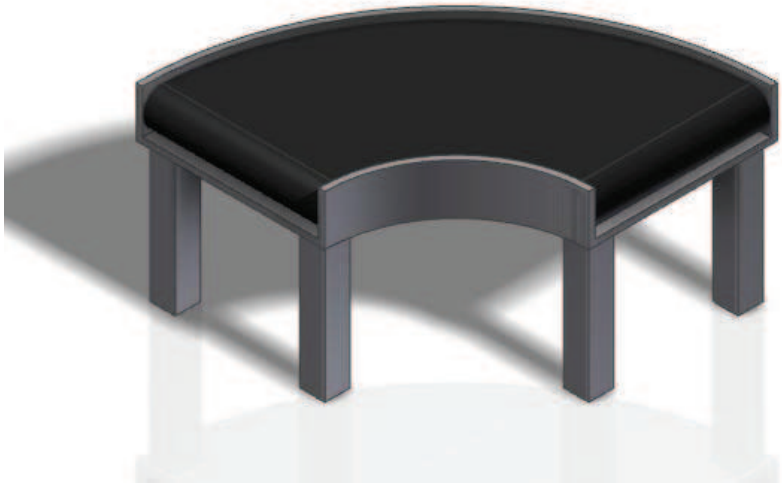

Specifying Extents

When you create extruded and revolved features, you can specify termination options for the feature in the dialog box. Depending on the option you choose, different interface options are available. By specifying termination options, you can control where the feature starts and ends.

The following illustration shows the Extents options that are available in the Extrude dialog box.

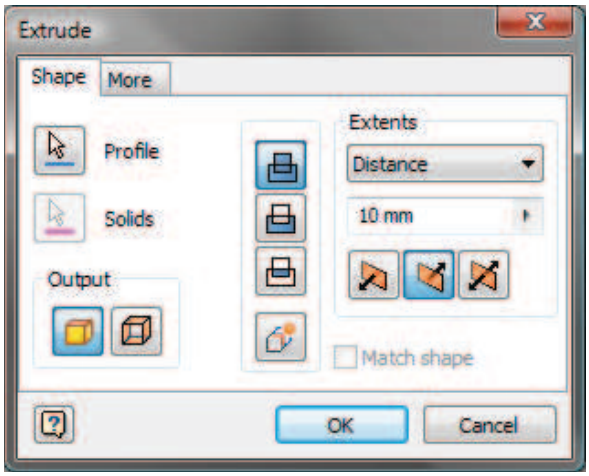

Option	Description
Distance 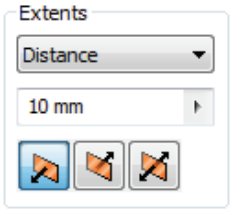 	This option extrudes the profile according to the distance specified.
To Next 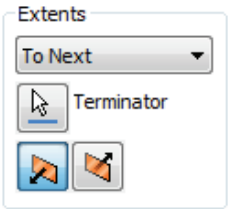 	This option extrudes the profile to the next possible face or plane. Use the Terminator icon to select a solid or surface on which to terminate the extrusion.

Option	Description
	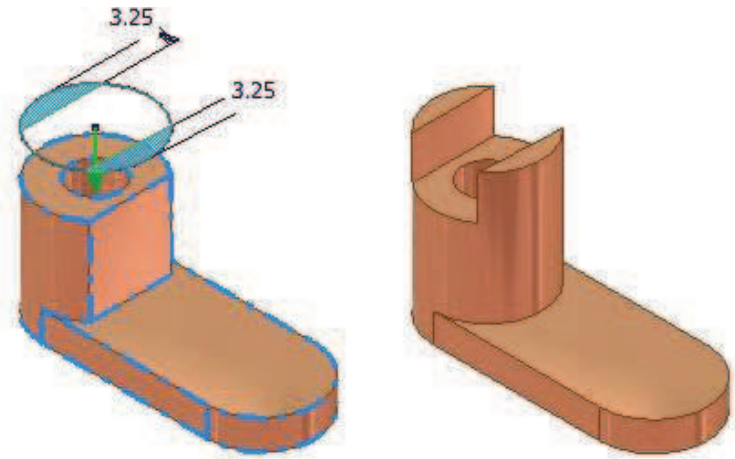
To 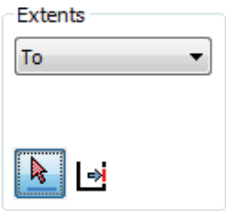	This option extrudes the profile to terminate on the selected face, plane, or point. If the selected termination face does not completely enclose the extrusion profile, select the Extended Face option to terminate the feature on the extended face. 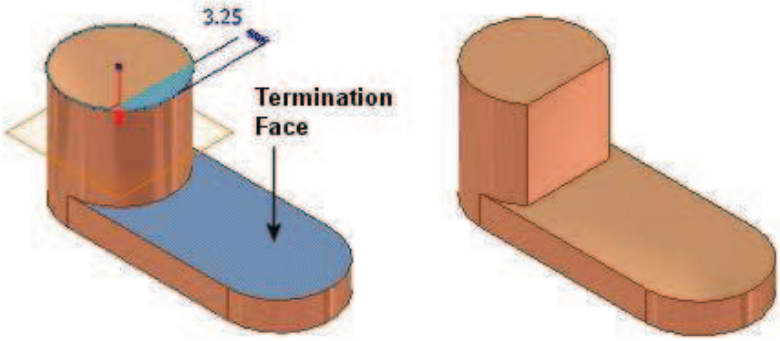
From To 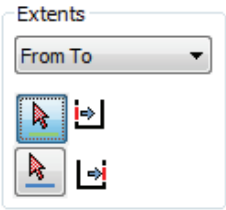	This option extrudes the profile by starting the extrusion at the face selected with the From option and ending the extrusion at the second face selected. If necessary, use the extend face option. 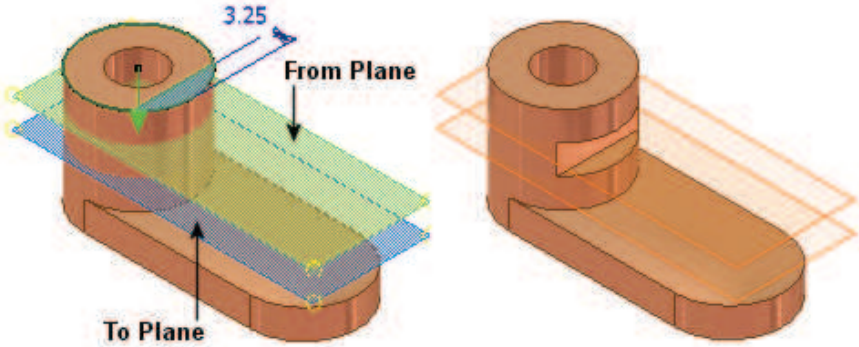

Option	Description
All 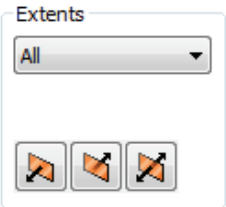 	This option extrudes the profile all the way through the part. If the part changes, the extruded feature continues to go all the way through the part. 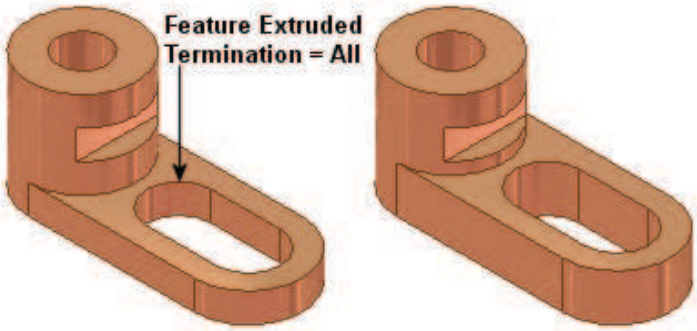
Extended Face 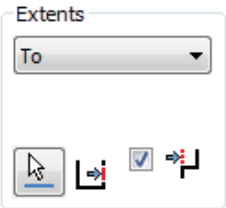 	This option extends a selected face with the To and From To options. The extrude does not build the extrusion if the sketched feature extends beyond the termination face. With the Extend option selected, a termination face becomes infinite in size. 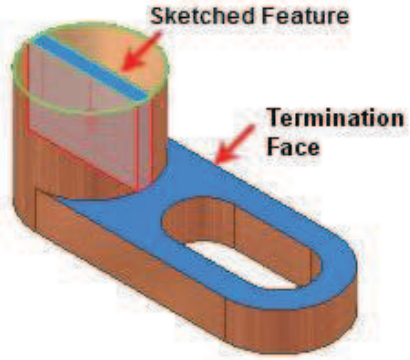 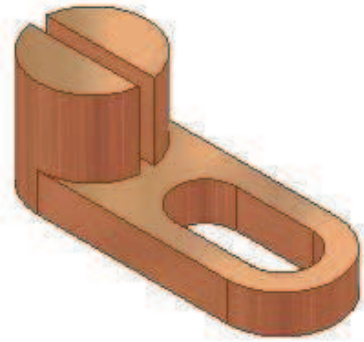

Additional Extents Options for Revolve

The following options are available for the **Revolve** tool.

Option	Description
Full 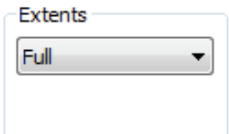 	This option revolves the profile a complete revolution around a specified axis. If the part changes, the revolved feature continues to go all the way around the part. 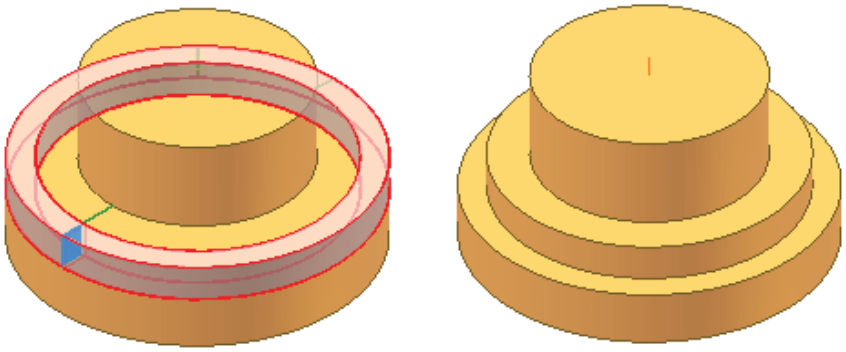
Angle 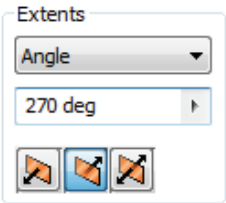 	This option revolves the profile a specified number of degrees around an axis. 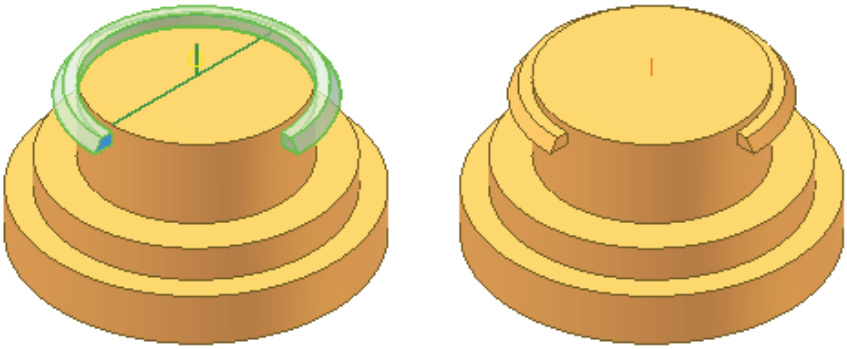

Procedure: Specifying Operations

The following steps describe how to specify operations.

1. Create additional sketch geometry on an existing feature.

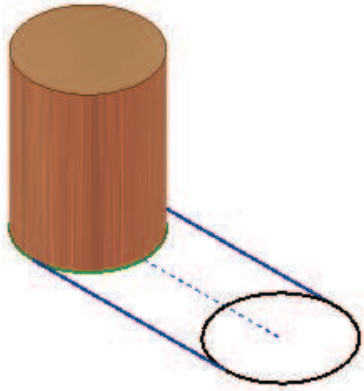

2. Start the **Extrude** tool.
3. In the Extrude dialog box, adjust the operations as required. In this example, Join is selected.

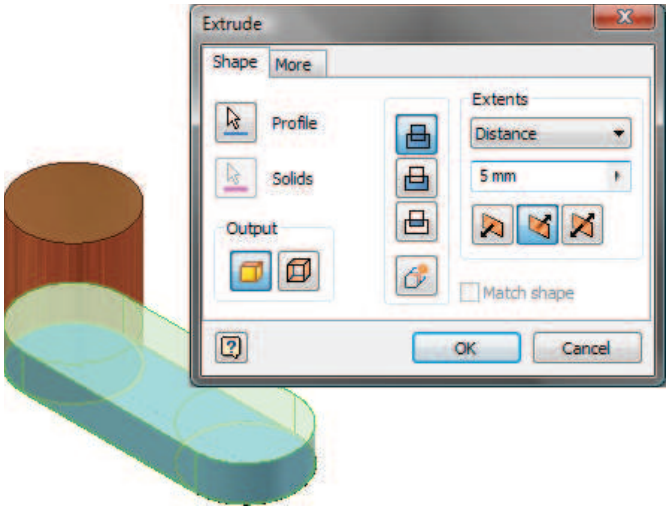

4. The additional extruded feature is added to the part.

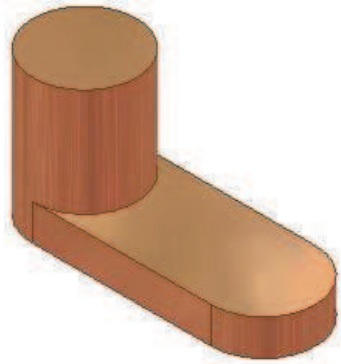

Procedure: Specifying Extents

The following steps describe how to specify extents.

1. Create additional sketch geometry on existing features as required.

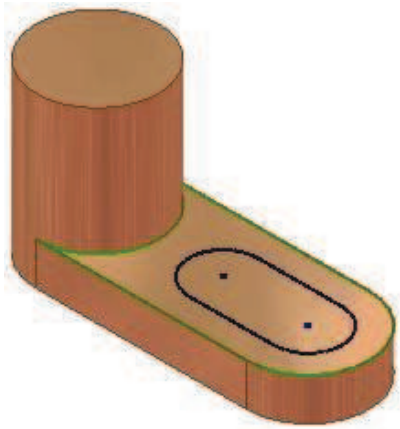

2. Start the **Extrude** tool.
3. In the Extrude dialog box, adjust the options as required. In this example, All is selected.

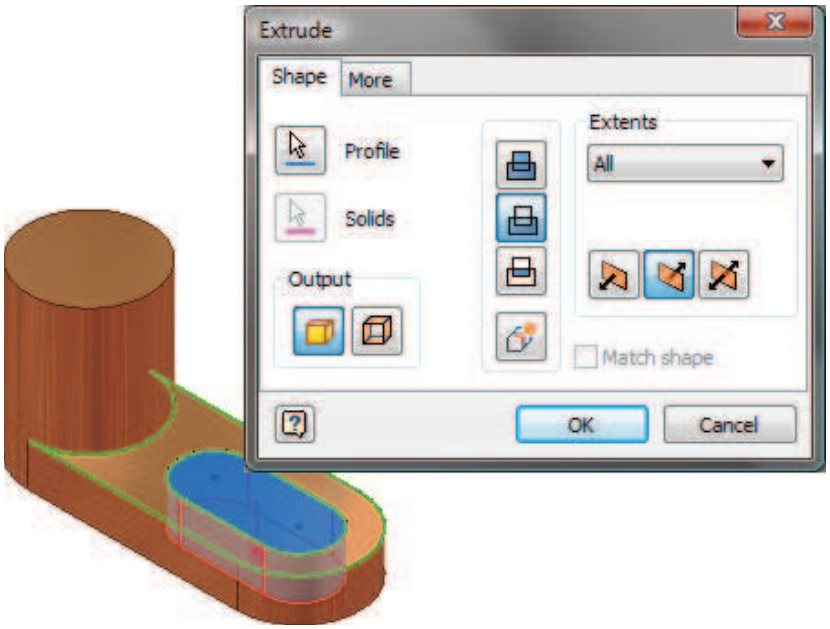

4. The additional extruded feature is added to the part.

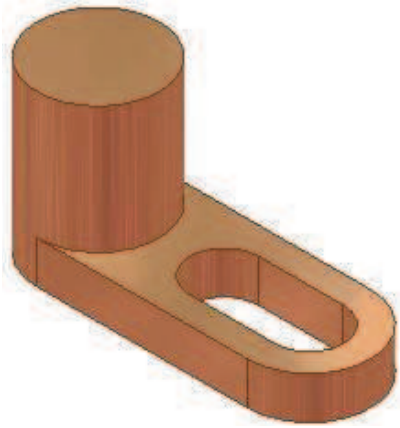

Orienting Sketches

When you create the first sketch for the base feature of your part, you usually use the default XY origin plane. However, the sketches that you create to add new features to the part often need to be oriented to other part faces.

The sketch plane has been oriented to the selected part face in the following illustration.

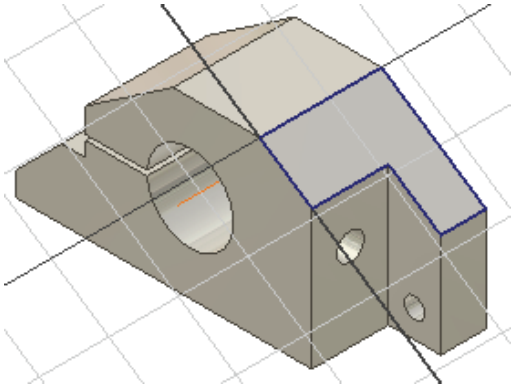

Procedure: Creating Sketch Planes on a Part Face

The following steps describe how to create a new sketch plane aligned to a selected face.

1. Right-click in a face of the part and select **New Sketch**.

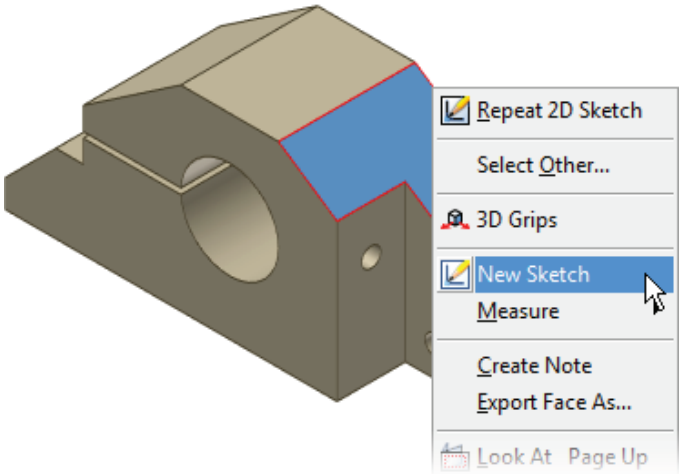

2. The sketch plane is created on the selected face.

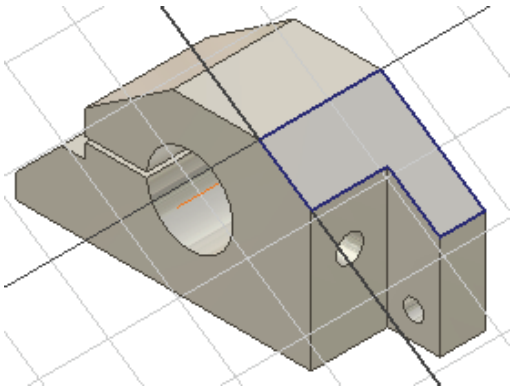

Procedure: Creating Sketch Planes Offset from a Part Face

The following steps describe how to create a new sketch plane offset from a selected face.

1. Start the **Create 2D Sketch** tool.
2. Click in the face and drag the sketch plane away from the selected face.

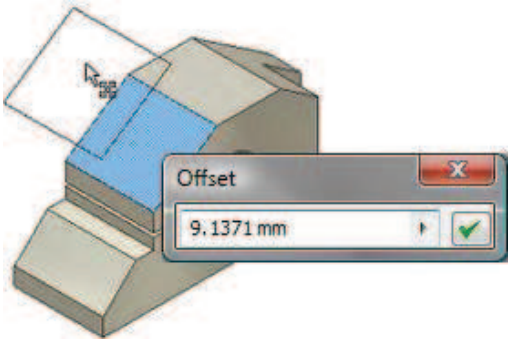

3. In the Offset dialog box, enter a value for the offset and click the green check mark. The sketch plane is created offset from the selected face at the distance you specified.

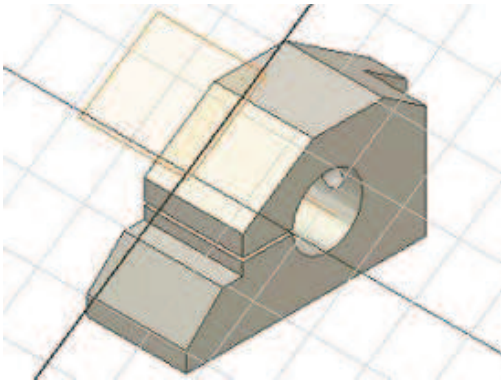

Exercise: Create Extruded Features

In this exercise, you build an Index Slide part file using several extruded features. Some initial geometry has been created, but you are required to create other sketch geometry.

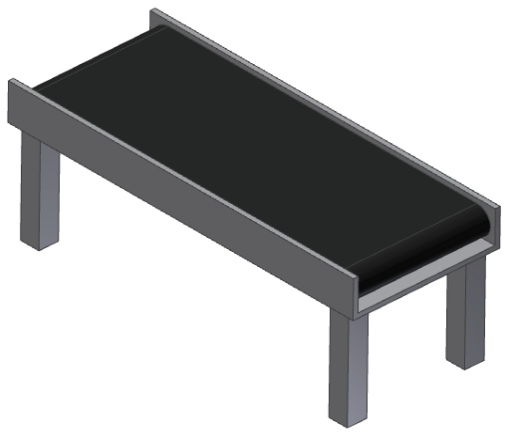

The completed exercise

Create Extruded Features Specific Distances

In this portion of the exercise, you extrude an existing sketch to create a base feature. Then you create a new sketch and extrude it a specific distance to create another sketched feature.

1. Open **INV_005_Extrusion.ipt**.

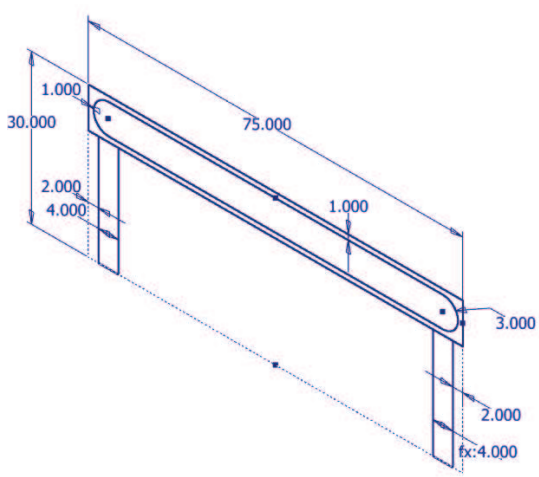

2. Extrude the two top profiles.
   - Start the **Extrude** tool.
   - Select the two top profiles.
   - For Distance, enter **Width=30** (1).
   - Click the Symmetrical Option (2).
   - Click OK.

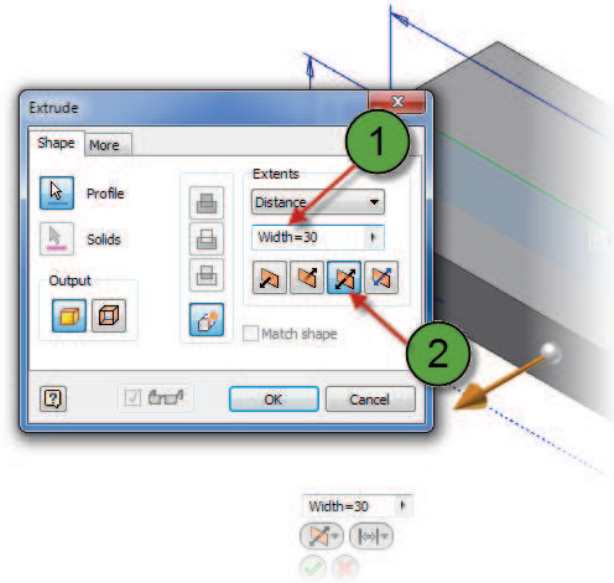

3. Use the **Shell** command to remove the top and end faces, creating a 1” channel.
   - Start the **Shell** command.
   - Click the select the top and end faces
   - Enter **1”** for the Thickness value.
   - Click **OK**.

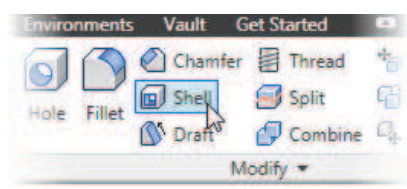

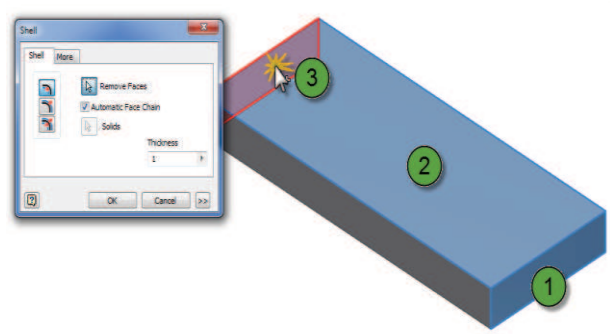

4. Sharing a sketch.

   In the Browser, expand Extrusion 1. Right click on sketch 1 and select Share Sketch.

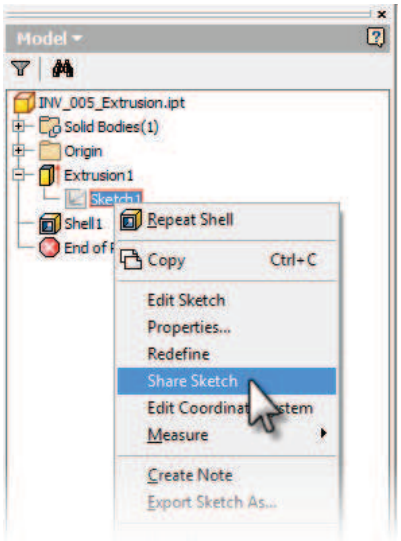

5. Extrude the legs of the conveyor.
   - Start the Extrude tool.
   - Select the two log profiles.
   - For the Distance, enter **Width-2.**
   - Select the Symmetrical option.
   - Click OK.

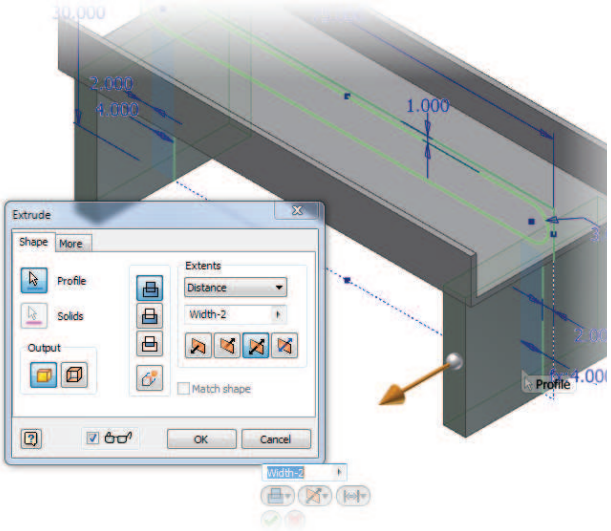

6. Cut out the leg openings.
   - Start the **Extrude** tool.
   - Select the two leg profiles.
   - Enter Distance **(Width-2)-Leg_W-Leg_W**.
   - Click the **Cut** option.
   - Click the **Symmetrical** option.
   - Click **OK**.

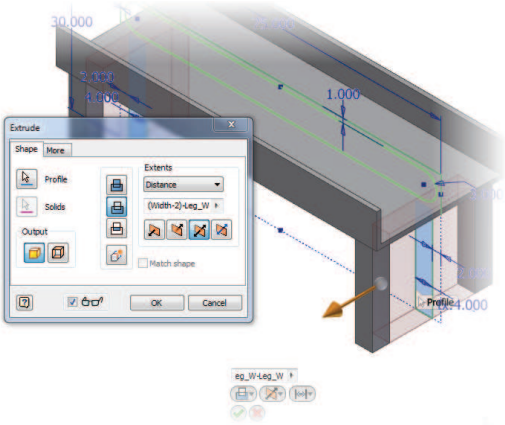

7. Extrude the Belt Feature as a secondary Solid Body.
   - Start the **Extrude** tool.
   - Select the Belt Profile
   - Set the Extents option to **Between** (1).
   - Select the two interior faces of the channel section.
   - Click the **New Solid** option (2).
   - Click **OK**.

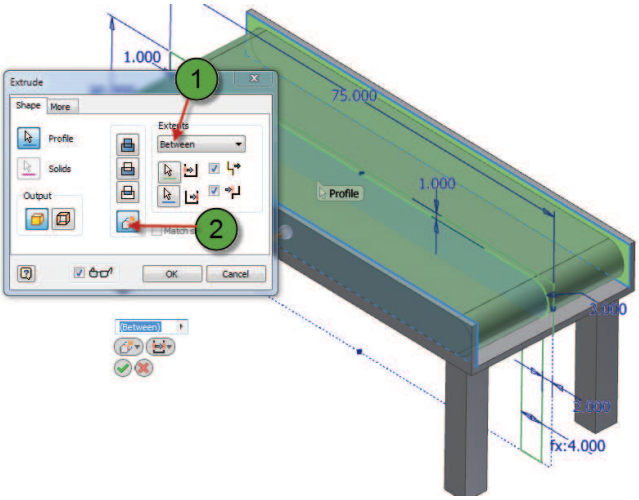

8. Turn off the visibility of the Shared Sketch. In the Browser, right click the shared sketch and select **Visibility**.

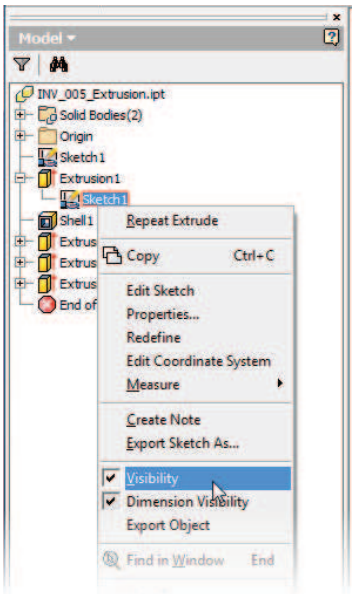

9. Change the color of the belt feature.

- Expand the Solid Bodies folder and selectSolid2.
- Right click and select properties from the menu.

- Change the Body Color Style to Black (1).

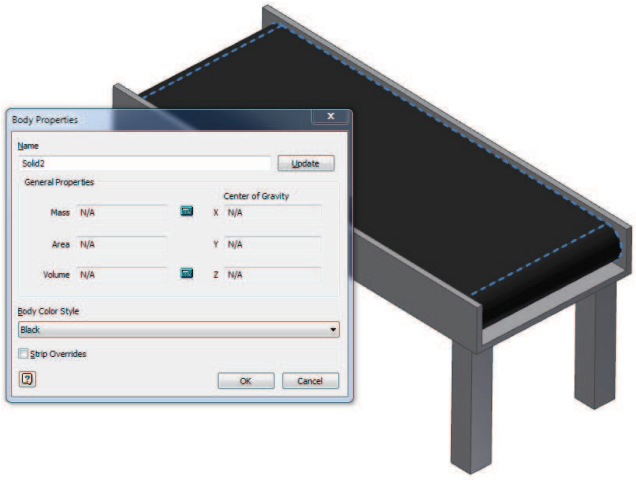

10. Close the file without saving.

Exercise: Create Revolved Features

In this exercise, you create a simple curved conveyor part file using the Revolve tool. The initial sketch will be created to start the exercise. The Frame and Belt will be constrained vertically in line with the origin of the file. The axis of revolution is drawn to the right of the initial profiles.

The completed exercise

Create Revolved Features that Add Material to the Part

In this portion of the exercise, you will create a sketch and revolve it into the base feature. You create another sketch and revolve it, creating another sketched feature that adds material to the part.

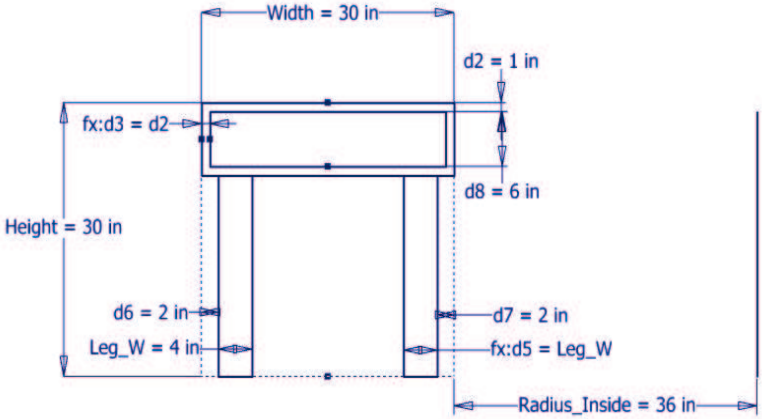

1. Start a New English part.
2. Draw the initial 2 point rectangle.
   - Constrain the midpoint of the lower horizontal line to the origin point of the file using a Coincident constraint.

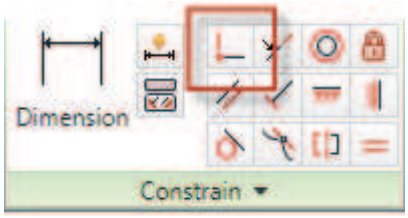

Note: If necessary, project the 0,0 center point into the current sketch plane.

- Select the 4 lines that make up the rectangle and then click the **Construction** tool on the format panel.
- Dimension the horizontal and vertical lines as shown in the following image.
  Note: Dimensions are displayed as expressions in this image.

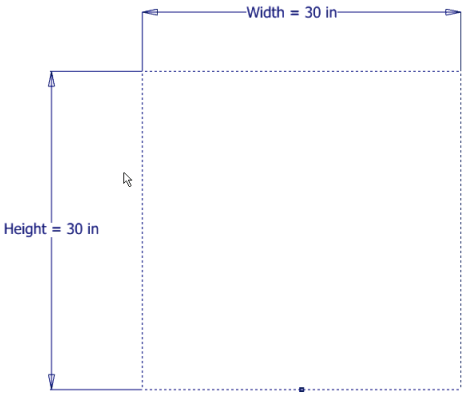

3. Create the 2 point rectangles shown in the following image.
   - Draw the outer rectangle constraining the two corners to the top of the construction outline.
   - Use the **Offset** command to create the inner rectangle.
   - Dimension the rectangle as shown.
     Note: A parametric relationship should be established between the dimensions that position the inner rectangle.

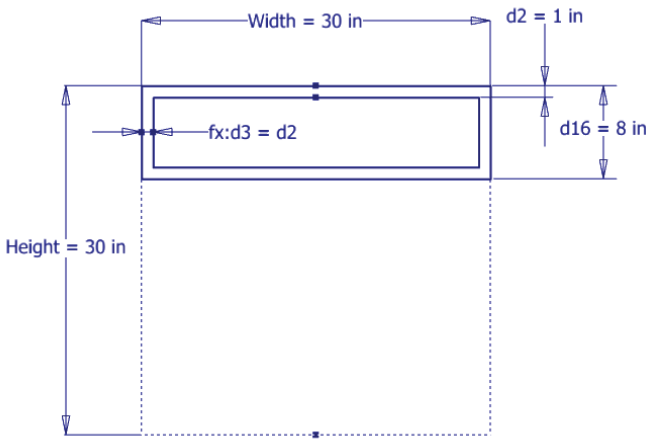

4. Draw the revolution axis to the right of the existing profiles as shown below.
   - Dimension the axis line with the value **Radius_Inside=36**.
   - Finish the sketch.

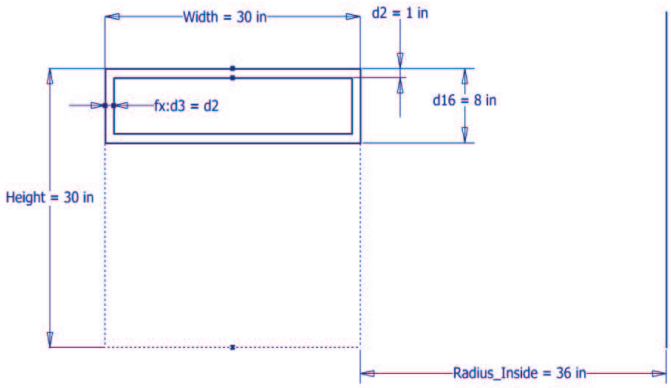

5. Use the **Revolve** tool to create the first revolve feature.
   - Start the **Revolve** tool on the Create panel.
   - Select the two rectangular profiles.
   - Select the **Axis selector** in the dialog box (1) and then click the axis line.
   - Set the Extents option to **Angle** (2) and set the value to **Angle=90** (3).
   - Change the direction option as shown in the image below (4).

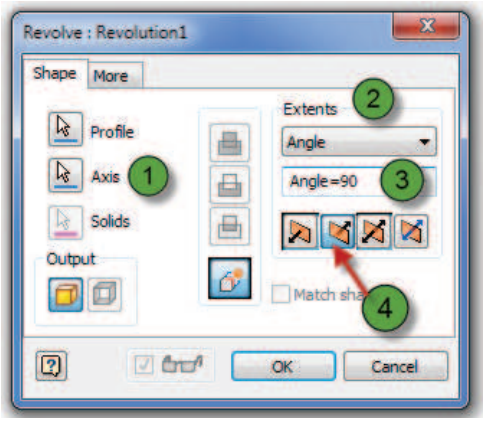

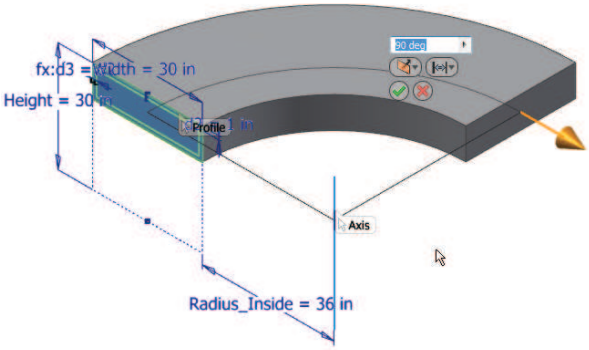

6. Use the **Shell** tool on the modify panel to create the channel feature.
   - Start the **Shell** tool and select the top and end faces.
   - Enter a thickness value of 1”
   - Click OK.

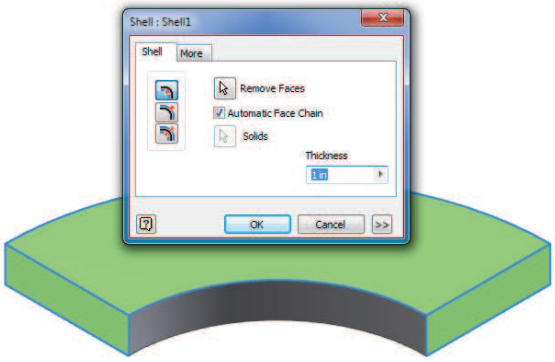

7. Share the original sketch to create the secondary revolve feature.
   - In the browser, expand the first revolve feature.
   - Right-click on **Sketch1** and select **Share Sketch** from the menu.

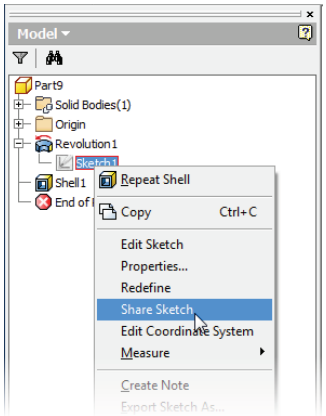

8. Use the **Revolve** tool to create the Belt feature as a new solid body.
   - Start the **Revolve** tool and select the inner rectangular profile.
   - Use the **Axis selector** (1) and click the axis line.
   - Set the Extents option to **Angle** (2).
   - Set the Value to **Angle** (3).
   - Change the direction option (4) as shown in the image below.
   - Click the **New Solid** option (5) to create a separate solid body.
   - Click **OK**.

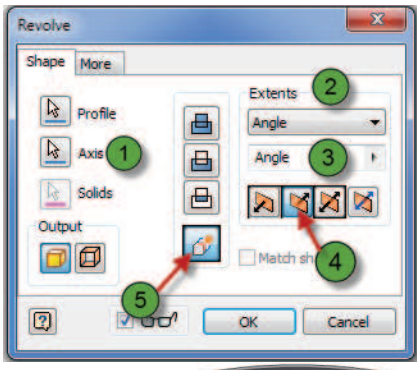

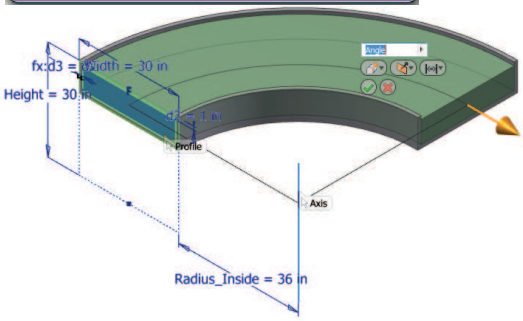

9. Turn off the visibility of the shared sketch.
   - In the browser, right click on the shared sketch and select **Visibility** from the menu.

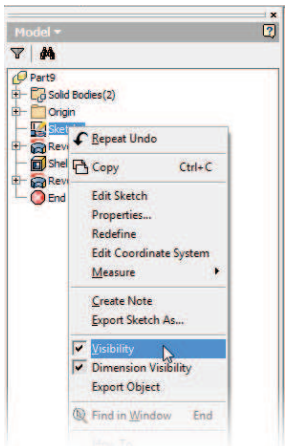

10. Add full round fillets to the belt feature.

- Start the **Fillet** command on the modify panel.
- Select the **Full Round** option (1).
- Select the top, end, and bottom faces on one end of the belt feature.
- Click **OK**.
- Add the opposite fillet using the same process.

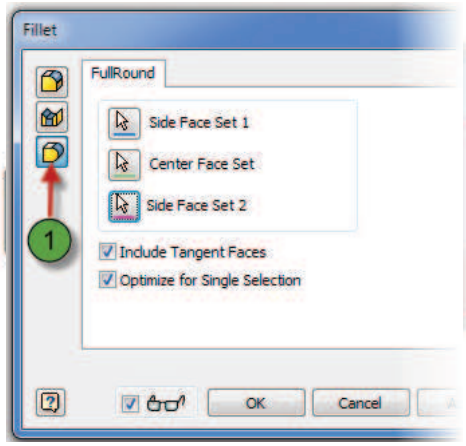

11. Change the color of the Belt solid body.

- Expand the **Solid Bodies** folder in the browser.
- Right click on Solid2 and select **Properties** from the menu.
- Set the Body Color Style (1) to black.
- Click **OK**.

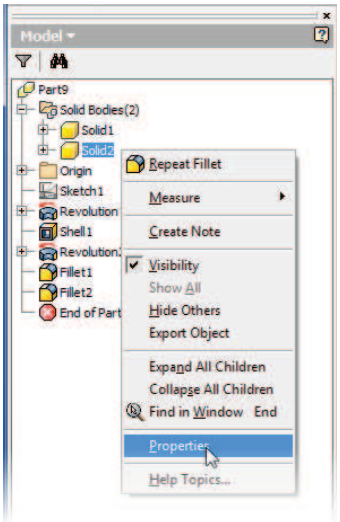

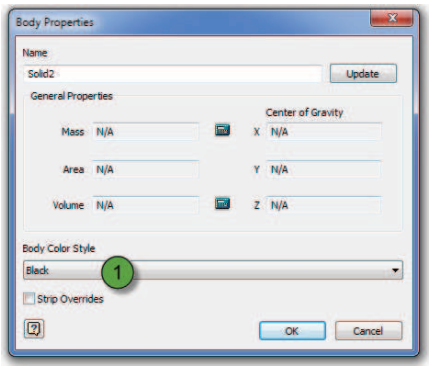

12. Close the file without saving.

Note: The legs of the curve conveyor will be created in another exercise.

Lesson: Intermediate Sketching

This lesson describes the use of reference and construction geometry to add design intelligence to sketches on your parts. As your part progresses, you add multiple sketched features. Each sketch may require the use of reference and construction geometry to fully constrain your sketches.

In the following illustration, reference geometry and construction lines are used to constrain the rectangle geometry on the face of the part.

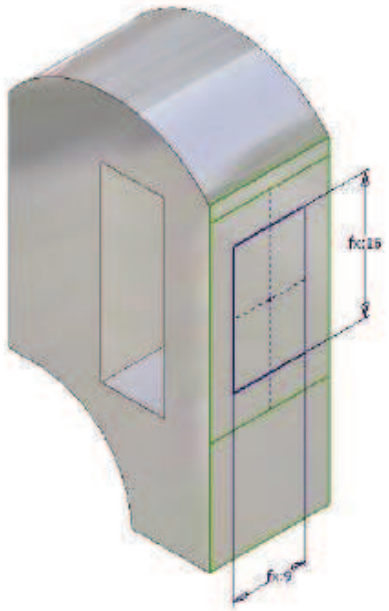

Objectives

After completing this lesson, you will be able to:

- Describe sketch linetypes and their behavior.
- Use the 2D sketch tools to create construction geometry.
- Project part edges onto a sketch plane.

About Sketch Linetypes

As your part design progresses, you need additional sketching tools to capture design intent within your sketch and to establish parametric relationships to existing faces and edges on your 3D part. As you create 2D sketch geometry, such as lines, arcs, circles, and prismatic shapes, you can use different linetypes for different purposes.

In the following example, several linetypes are used to define, position, and constrain geometry on the part.

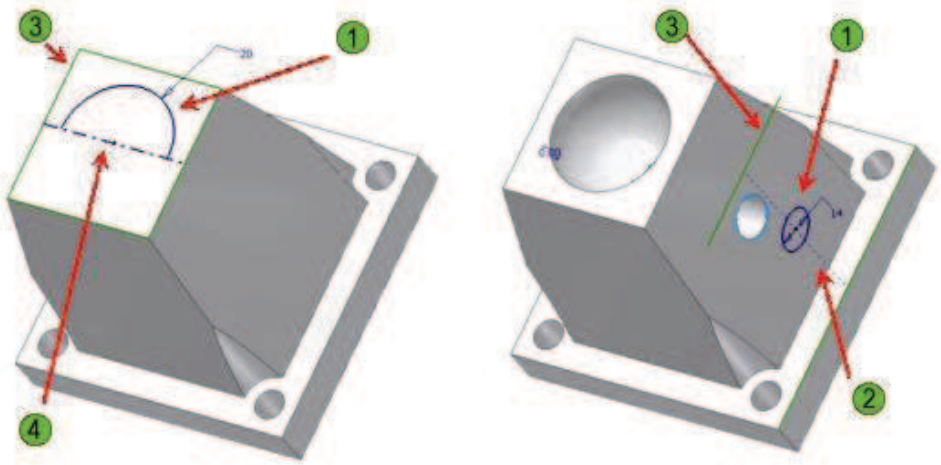

1. Normal sketch geometry
2. Construction geometry
3. Reference geometry
4. Centerline geometry

Definition of Sketch Linetypes

The following illustration shows the appearance of the different linetypes. Different linetypes display in different colors in the sketch environment; however the exact color is based on the color scheme you have selected. In the following illustration, using the Presentation scheme, lines 2 and 3 are displayed orange, while the reference geometry (4) is green. The reference geometry consists of projected edges of the solid model (arrows).

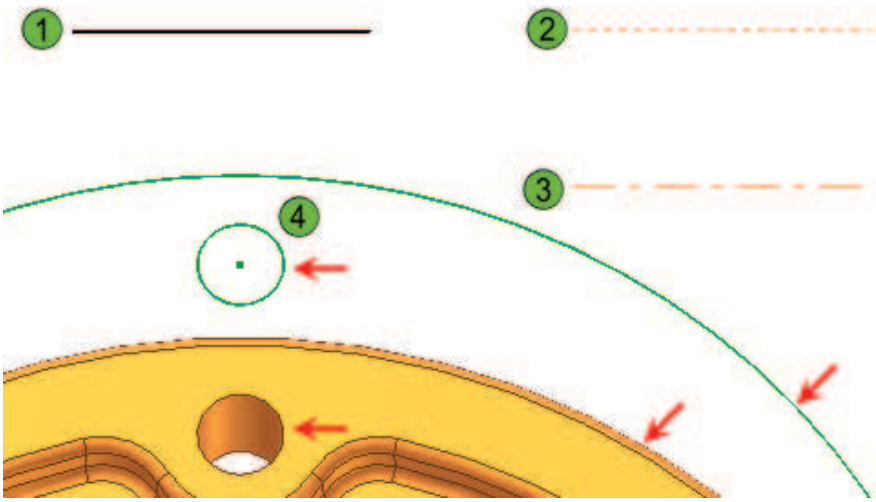

Sketch Linetypes

The following are the different linetypes and how they are used.

	Linetype	Description
1	**Normal**	This is the default linetype in a sketch. Normal lines define the profile or path that is used to define the shape of a sketched feature.
2	**Construction**	Construction lines are used to aid in constructing and constraining normal geometry. You use construction lines when you need additional geometry to constrain a sketch but do not want that additional geometry to participate in defining the profile for the feature.
3	**Centerline**	The Centerline linetype is another type of Construction linetype. It can be used to define the centerline about which to revolve a profile to create a revolved feature. When you add dimensions between centerlines and other sketch geometry, they are treated as diameter dimensions.
4	**Reference**	Reference geometry is geometry that is projected onto your sketch from existing part vertices, edges, and faces. You use reference geometry to constrain normal sketch geometry to existing features on the part. Reference geometry remains associative to the original part vertices, edges, and faces. You can also use reference geometry to define the profile or path for a sketched feature.

Normal Linetype Example

The notched rectangle sketch on the left, consumed in the block feature on the right, has been created with the Normal linetype. While sketching, normal lines are represented as solid lines.

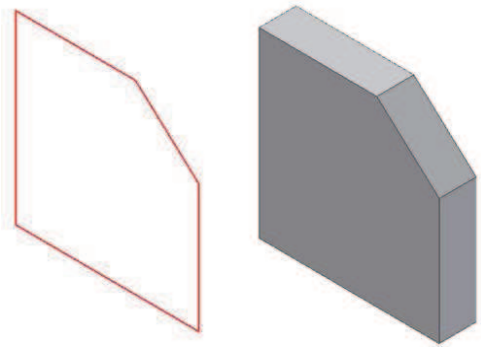

Construction Linetype Example

In the following example, the diagonal dotted line in the left image is a construction line. The endpoints of the construction line are constrained to the opposite corners of the face. The midpoint of the construction line is used to orient the center of the circle, which is defined with a normal linetype. The circle is then extruded with the Cut option to define a shaft opening in this block.

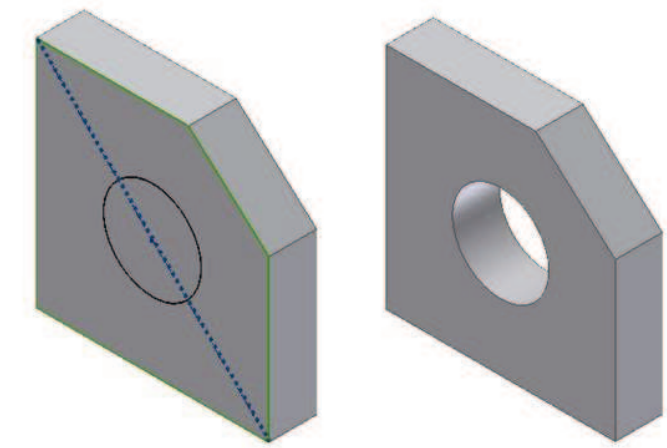

Reference Geometry Example

The current sketch plane in this example is coplanar with the side of the base of the part. Reference geometry is projected to the sketch plane from the perimeter of the part, from the hole through the part, and from the spherical cutout on the top.

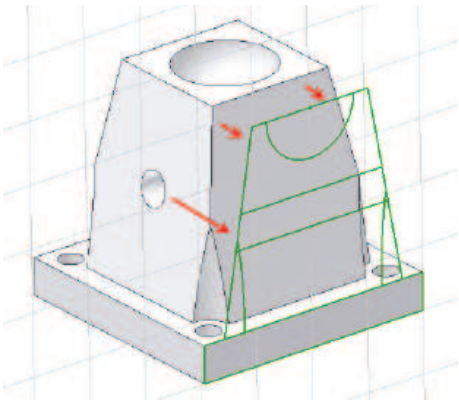

Centerline Linetype Example

The dashdot line on the left is a centerline. The circle is revolved around the centerline to create the torus feature on the right.

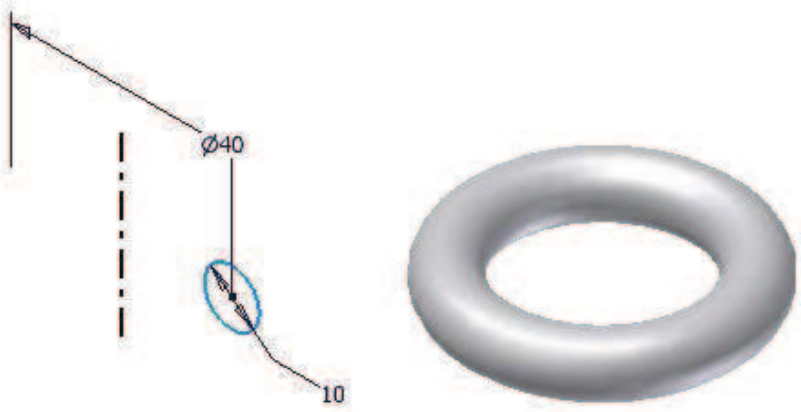

Creating and Using Construction Geometry

You can use construction geometry to help you control and define a sketch by using geometric construction techniques rather than complex dimensions and formulas. You can constrain and dimension construction geometry like any other 2D sketch geometry. You can use construction geometry as a reference for dimensions to other normal sketch geometry, as well as to constrain normal sketch geometry.

In the following illustration, construction lines (1) are used to position the slot from the center of the circle and along the angled construction line.

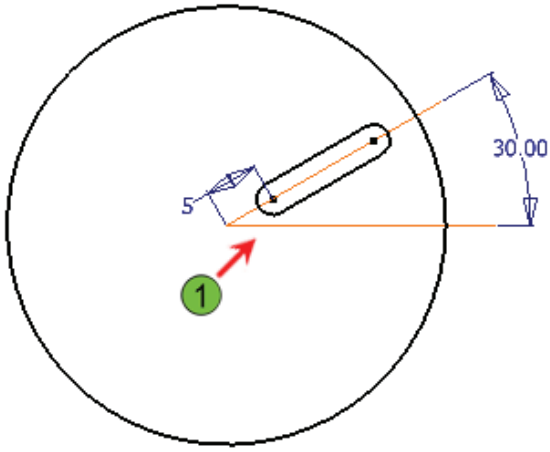

Tools for Creating Construction and Centerline Geometry

The ribbon contains two buttons for creating construction and centerline geometry. Unlike other toolbar buttons, these buttons also indicate the current status of the selected geometry or drawing mode. When you click a button, you activate that specific mode. The selected mode remains active until you click the button again.

Access

Construction Geometry

Ribbon: *Sketch* tab > Format panel

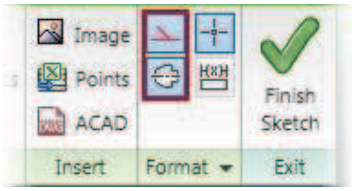

You can use the following buttons to create or change existing geometry types.

Icon	Option	Description
	Construction Geometry	When this button is selected, all 2D geometry drawn is construction geometry. To change existing geometry to construction, select the geometry, then click this button.
	Centerline Geometry	When this button is selected, all 2D geometry drawn is centerline geometry. To change existing geometry to centerline, select the geometry, then click this button.

To convert normal geometry or dimensions, select the geometry or dimension and then click the appropriate button on the ribbon.

Procedure: Creating Construction Geometry

The following steps outline the procedure for creating construction geometry.

1. On the ribbon, click the **Construction** tool.
2. Using standard sketching tools, create the required 2D geometry.

   In the following example, a construction line was sketched between the opposite corners of a rectangle. The lines defining the rectangle are normal sketch lines.

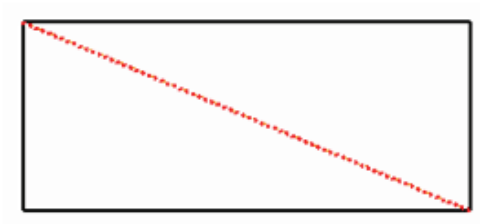

3. Click the **Construction** tool again to return to creating normal sketch geometry.

Procedure: Converting Existing Geometry to Construction Geometry

The following steps outline the procedure for converting existing sketch geometry to construction geometry.

1. To change existing geometry to construction geometry, select the geometry in the graphics window.

   In the following example, a circle was selected.

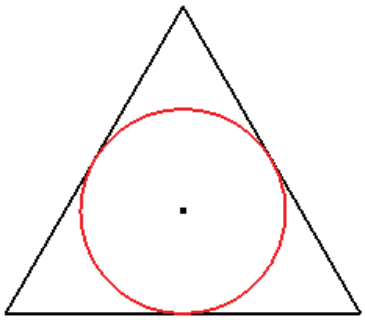

2. On the ribbon, click the Construction button. The selected geometry is changed to construction geometry.

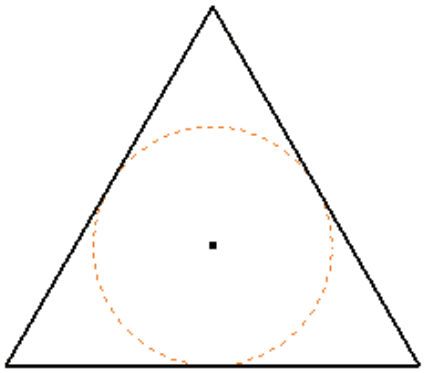

Procedure: Creating Centerline Geometry

The following steps outline the procedure for creating centerline geometry.

1. On the ribbon, click the **Centerline** tool.
2. Using standard sketching tools, create the required 2D geometry.

   In the following example, a vertical centerline was sketched to the left of the normal sketch geometry.

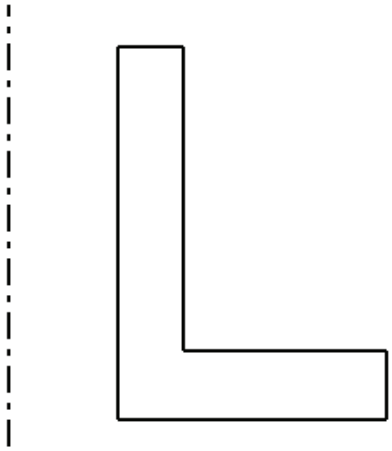

3. Click the **Centerline** tool again to return to creating normal sketch geometry.

Procedure: Converting Existing Geometry to Centerline Geometry

The following steps outline the procedure for converting existing sketch geometry to centerline geometry.

1. To change existing geometry to centerline geometry, select the geometry in the graphics window.

   In the following example, a horizontal line that bisects the slot shape is selected.

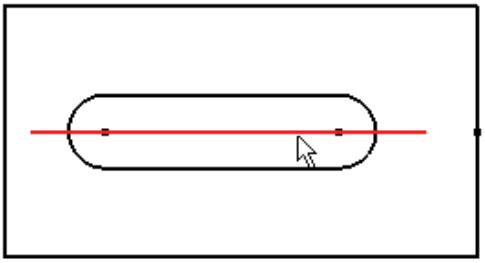

2. On the ribbon, click the **Centerline** tool. The selected geometry is changed to centerline geometry.

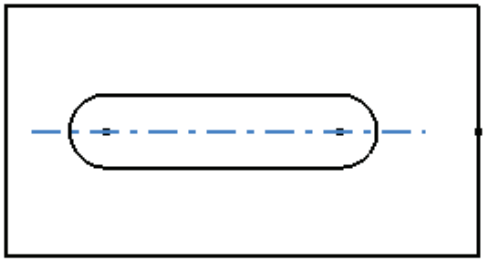

Creating and Using Reference Geometry

Reference geometry is geometry that is created when existing vertices and edges of the part are projected onto the active sketch plane. Reference geometry is not drawn; rather it is created when you define a new sketch plane on a planar face of the part or by using the Project Geometry tool. Without reference geometry, you cannot dimension or constrain sketch geometry to the existing features on the 3D part.

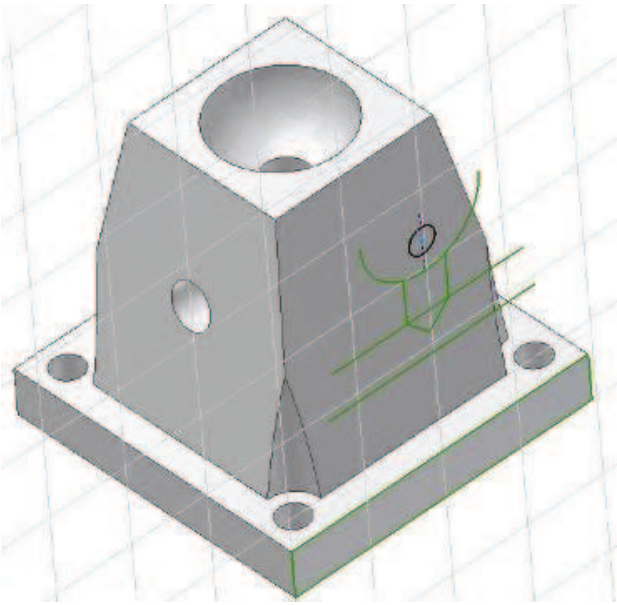

New Sketches and Reference Geometry

When you create new sketches on a planar face of the part, the edges of the selected face are automatically projected onto the sketch as reference geometry. You can use this reference geometry:

- To dimension to other sketch geometry.
- For relational constraints to other sketch geometry.
- As the basis for defining the path or profile for a sketched feature.

The following example demonstrates how reference geometry is created and used when defining a new sketch on an existing part face.

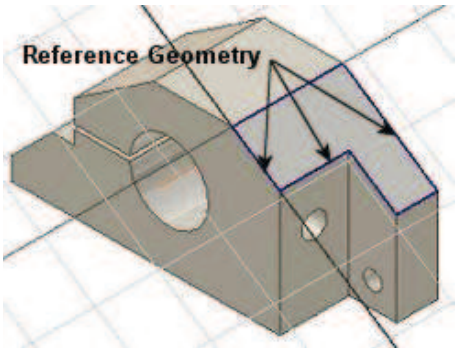

A new sketch is created on an existing part face. The coplanar edges of the existing part face are automatically projected onto the new sketch.

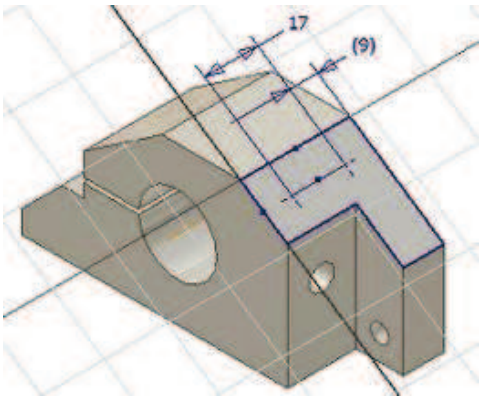

Create additional sketch geometry and use the projected reference geometry for dimensions or constraints.

Project Geometry Tool

You use the **Project Geometry** tool to project additional part vertices and edges that are not coplanar to the sketch plane onto the sketch as reference geometry. When you use the **Project Geometry** tool, you are prompted to select geometry to project onto the current sketch plane. As you select the geometry, it is projected onto the current sketch plane as reference geometry and is always associative to the original source geometry. This means that if the source geometry changes, the reference geometry also changes. However, after a reference geometry linetype is changed to another linetype, it loses its associativity.

Projecting Part Edges

Following are some key attributes for projecting part edges:

- Can be used as the basis for dimensions to new sketch geometry.
- Can be used to apply relational constraints to new sketch geometry.
- Cannot be dimensioned.
- Cannot be trimmed.
- Can be mirrored.
- Cannot be drawn; can only be created by using Project Geometry tool or by selecting the Autoproject Edges option.

Access

Project Geometry

Ribbon: *Sketch* tab > Draw panel

Toolbar: **2D Sketch Panel**

Autoproject Options

You can use the Autoproject functionality to speed projection of geometry to the sketch plane.

Autoproject for Sketch Creation

When you check the box next to the **Autoproject Edges for Sketch Creation and Edit** option on the *Sketch* tab in the Application Options dialog box, the edges of the selected planar face are automatically projected onto the new sketch when you create a new sketch plane on an existing face.

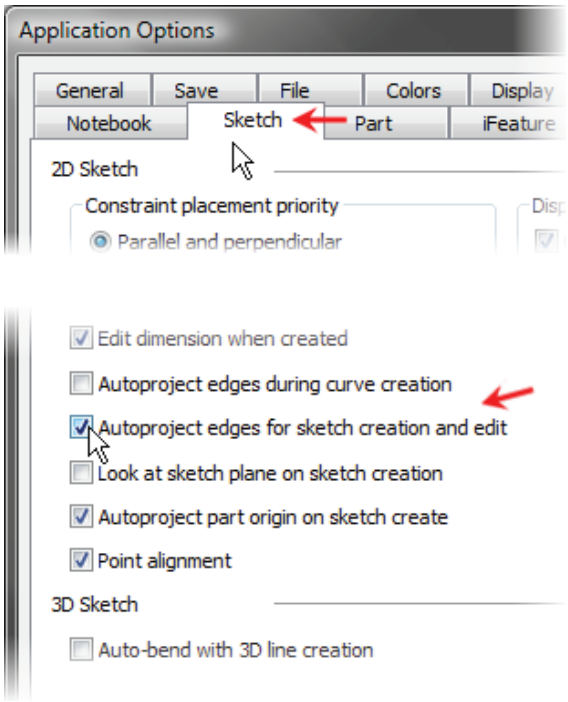

Autoproject Edges

When the **Autoproject Edges During Curve Creation** option is selected, you can autoproject geometry by hovering the pointer over the geometry to be projected while sketching.

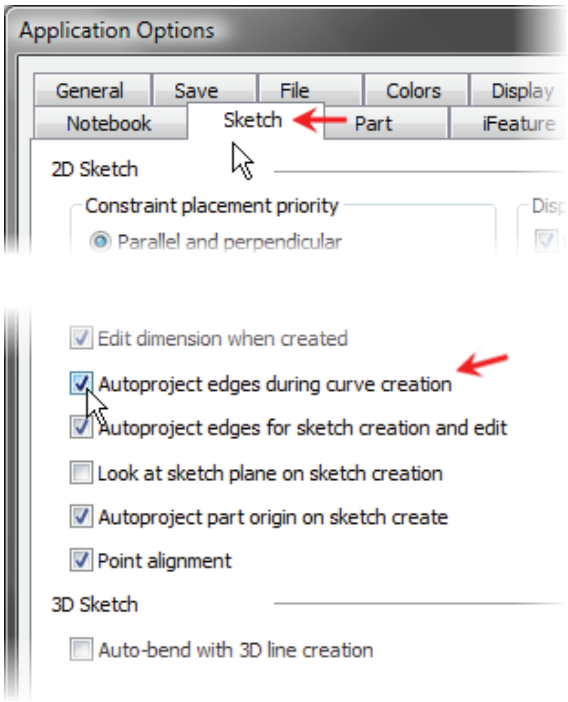

Sketching Shortcut Menu

While sketching, right-click in the drawing area and select **AutoProject**. This enables you to hover over geometry to automatically project onto the current sketch plane.

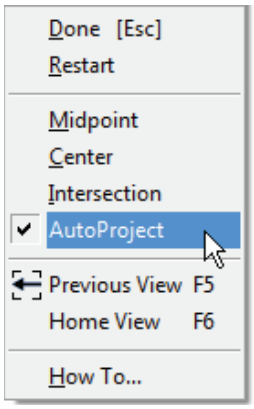

Procedure: Referencing Model Edge Geometry

The following steps outline how to create reference geometry during curve creation in a sketch by autoprojecting model edge geometry.

1. Create a new sketch on the existing part.

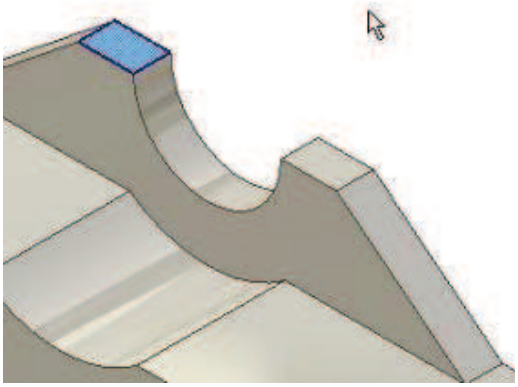

2. Begin sketching the required geometry. Right-click in the graphics window and select **AutoProject** in the shortcut menu.

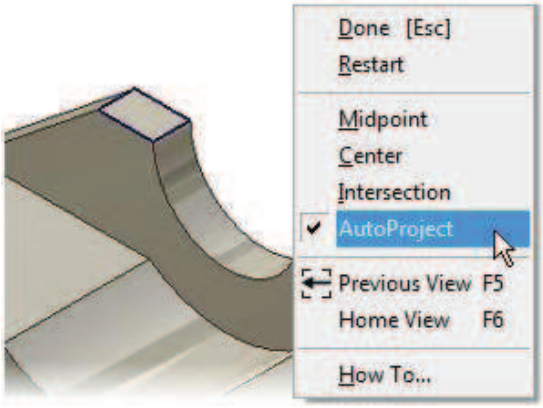

3. Hover over the geometry to project. It is automatically projected to the current sketch plane.

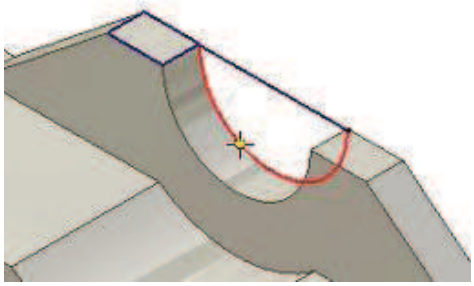

4. Continue sketching the required geometry as required.

   Tip: You may consider turning off the AutoProject option until it is needed again. This action prevents the accidental projection of geometry while sketching over existing part features.

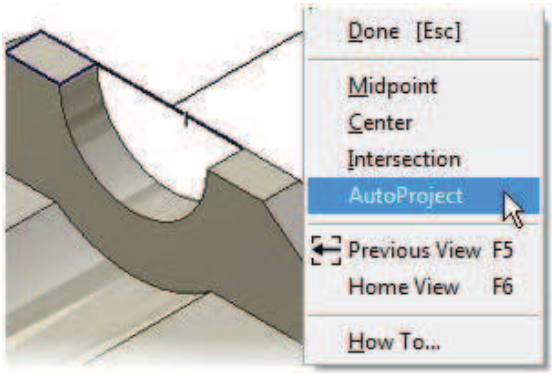

Lesson: Editing Parametric Parts

This lesson describes the various methods used to make changes to parametric part models. You can edit sketches, modify features, and create and use parameters while making modifications to your models.

Statistics show that designers spend more time making part modification and engineering changes than they spend creating new parts. You need to be able to modify your existing part models accurately and efficiently.

The following illustration shows a parametric part model before and after implementing changes to existing features.

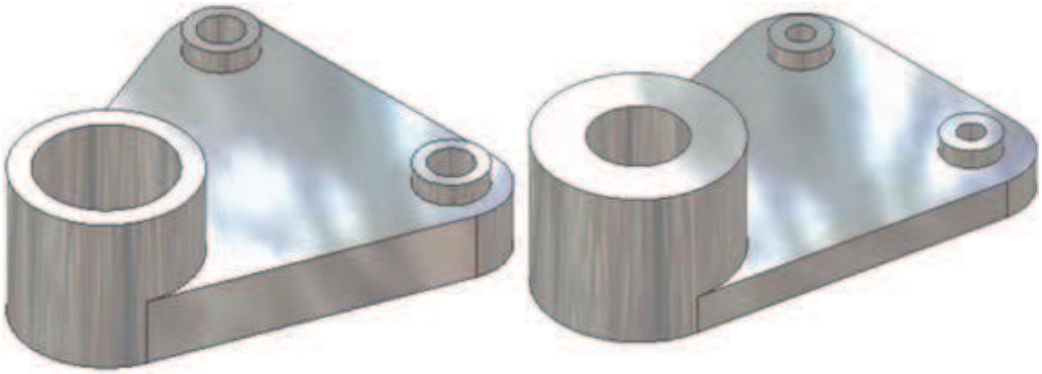

Objectives

After completing this lesson, you will be able to:

- Edit features from the browser.
- Edit sketches from the browser or toolbar.
- Create and modify parameters and equations.

Editing Features

After you create features on your parametric part, you can modify those features at any time. Sometimes all you need to change is the size of the feature. Other times you may need to make a more significant change. Autodesk Inventor provides multiple options for editing your designs.

The following illustration shows a part model before, and then after the extrusion distance was modified.

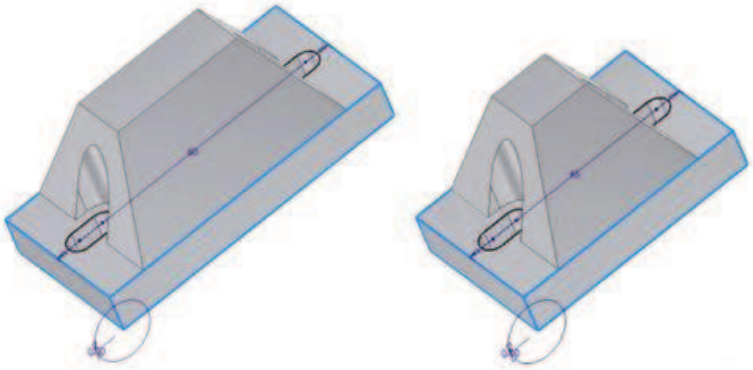

Options for Editing Features

There are three basic ways to modify features on your parametric parts. With both sketched and placed features, you can display and modify the dimensions to simply change the size of the feature, or you can access the feature dialog box to make a more significant change, like changing an operation, extrusion direction, or the extents of the feature. For sketched features you also have the option to modify the sketch geometry. For example, you can add and delete dimensions or constraints, or you can even modify the shape of the sketch by changing the sketch geometry.

In the following illustration, the left browser image shows the three options for editing a sketched feature. The browser image on the right shows the two options for editing placed features.

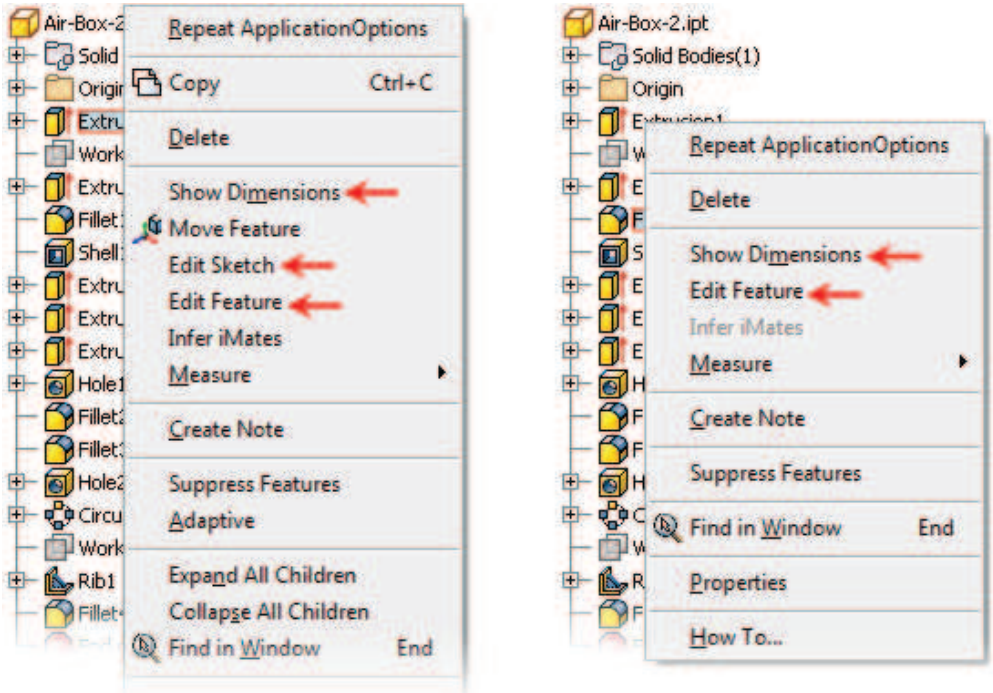

Editing Features Using Show Dimensions

If you want to change the size of a feature, you can use the **Show Dimensions** option to change the value of an existing dimension. All sketch dimensions are displayed as well as other dimensions that are used to define the feature size, such as extrusion depth, revolution angle, or taper value.

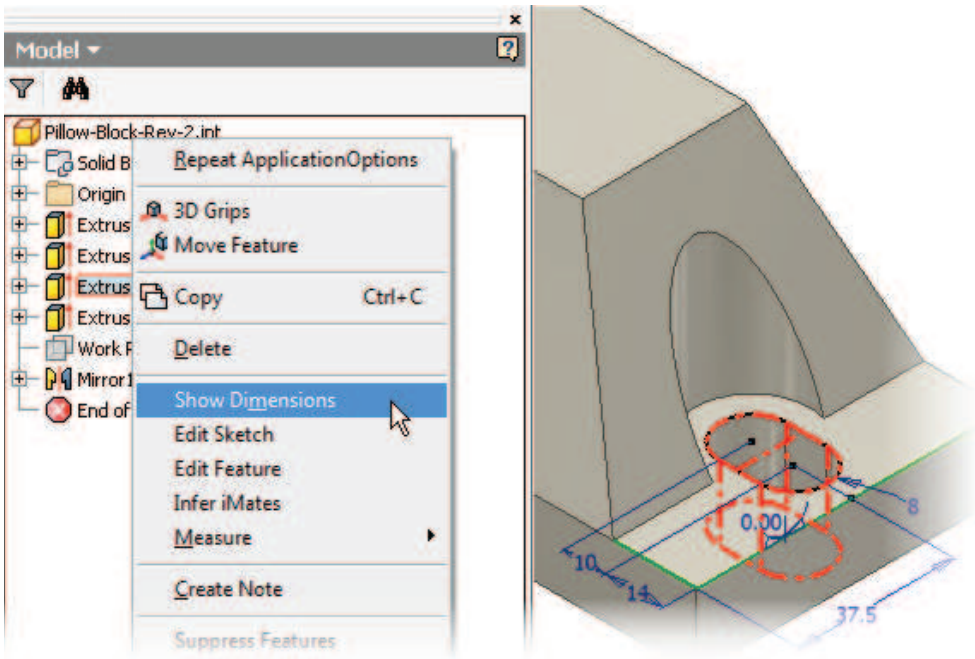

Editing Features Using Edit Feature

When you use the **Edit Feature** option to edit a feature, you are presented with the same dialog box that you used when you created the feature.You can change the parameters, such as distance, feature relationships, and termination options. You can also reselect geometry to be included in the feature.

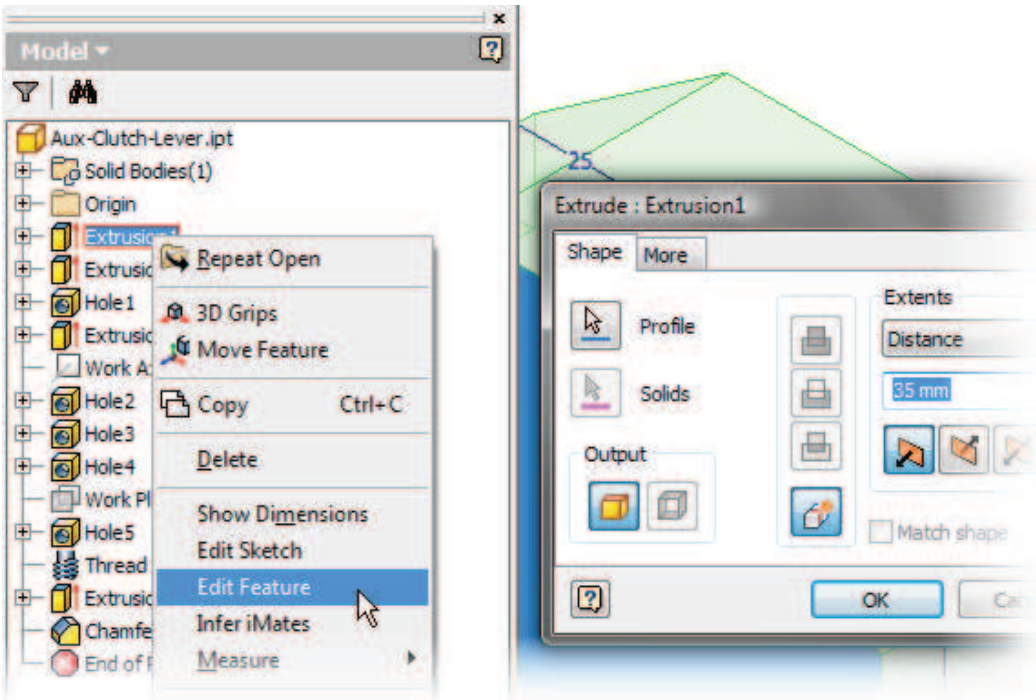

Access

Show Dimensions

Browser: Double-click the **feature**. (**Note:** Dimensions are only visible on the underlying sketch while the feature is being edited.)

Browser: Right-click the **feature** > **Show Dimensions.**

Access

Edit Feature

Browser: Double-click the **feature**.

Browser: Right-click the **feature > Edit Feature.**

Procedure: Modifying a Feature Using Show Dimensions

The following steps describe how to edit a feature using the Show Dimensions option.

1. Right-click the feature in the browser and select **Show Dimensions**. All the controlling dimensions are displayed on the feature in the graphics window.
2. Double-click the dimension to modify and enter a new value in the Edit Dimension dialog box.
3. Click **Update** in the Standard toolbar to apply the changes to the part.

Procedure: Modifying a Placed Feature Using Edit Feature

The following steps describe how to edit a placed feature using the Edit Feature option.

1. Right-click the feature in the browser and click **Edit Feature**. The dialog box used to create the feature is displayed.
2. Change the settings or values in the dialog box, then click **OK**. The part automatically updates.

Procedure: Editing Extruded Features

The following steps describe how to edit extruded features.

1. In the browser, right-click the feature. Click **Edit Feature**.
2. In the Extrude dialog box, adjust the options as required to edit the feature.

Procedure: Editing Revolved Features

The following steps describe how to edit revolved features.

1. In the browser, right-click the feature. Click **Edit Feature**.
2. In the Revolve dialog box, adjust the options as required.

Editing Sketches

As you build your parametric model, you create multiple sketches. When the sketch is used by a feature such as Extrude or Revolve, the sketch becomes consumed by the feature and is displayed under the feature in the browser. You can see each of the sketches in the browser by expanding the particular feature(s). Even though this sketch is consumed by the feature, it can still be modified.

The following illustration shows how sketches are consumed by the feature for which they are used.

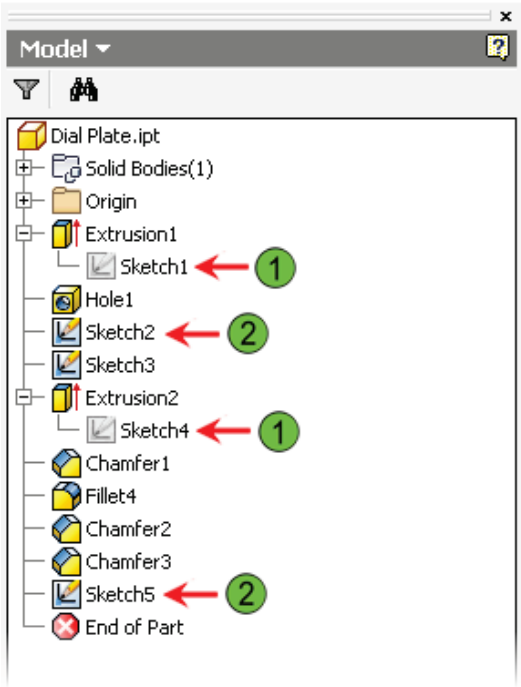

1. The Extrusion1 feature has consumed Sketch1 and Extrusion2 has consumed Sketch4.
2. Sketch2 and Sketch5 are unconsumed sketches.

Editing Consumed Sketches

One powerful way to modify a feature is to edit the sketch. Editing the sketch places the model in a rolled-back state, where only the features existing at the time this sketch was created are visible. When you edit sketches, you are returned to the sketch environment and the panel bar changes, providing you with access to all the sketch tools initially used in creating the sketch. You can add, replace, or delete dimensions or constraints and even modify the sketch geometry. To return to the part modeling environment, click Return on the Standard toolbar.

In the following illustration, Sketch1 has been consumed by Extrusion1 in the browser. You can expand the Extrusion1 feature to expose and edit the consumed sketch. Notice the browser background color changes to indicate the active sketch.

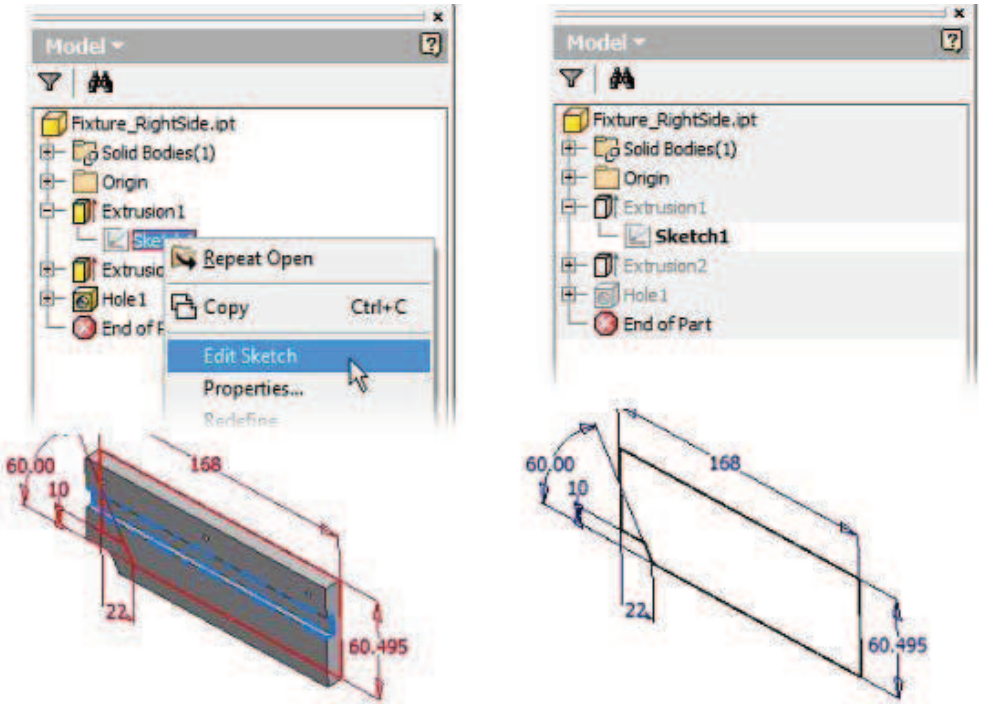

Access

Edit Sketch

Browser: Double-click the **sketch.**
Browser: Right-click the **feature > Edit Sketch.**
Toolbar: **Standard > Sketch > Select the sketch in the browser.**

Procedure: Editing Sketches

The following steps describe how to edit sketches.

1. In the browser, right-click the feature or sketch and select **Edit Sketch**.

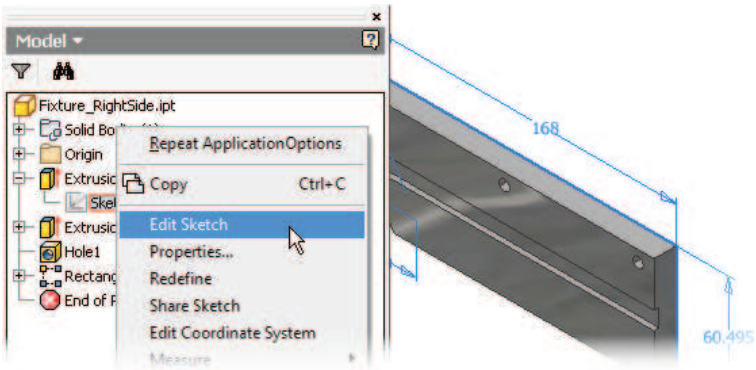

2. After the sketch has been activated for editing, you can make changes to geometry, dimensions, and constraints.

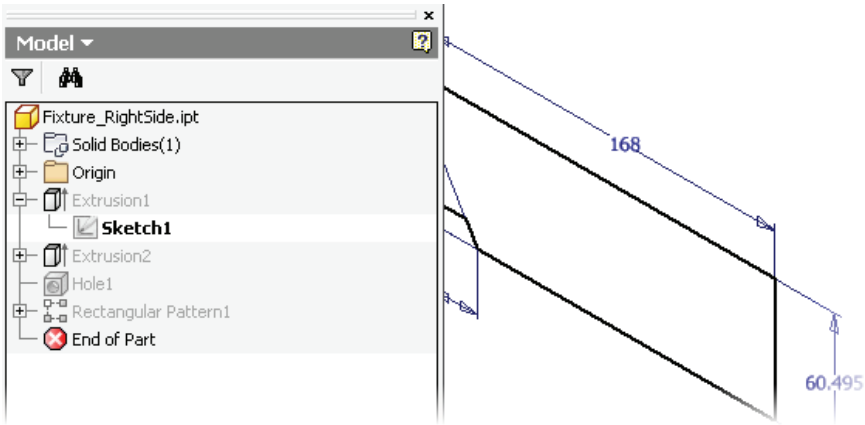

3. Continue to make edits to the sketch as required.

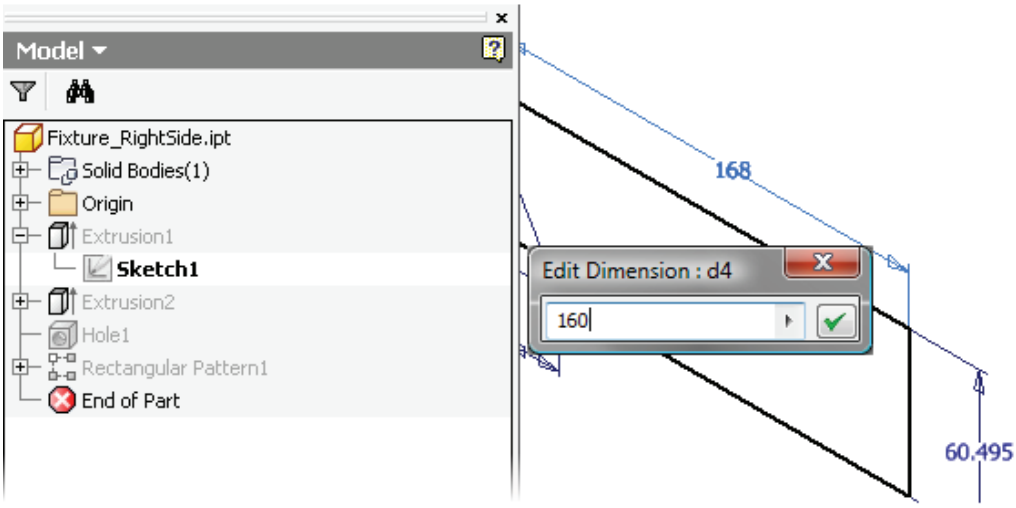

4. When you have finished editing the sketch, on the ribbon, click **Finish Sketch** to exit the sketch and return to the part model. The changes in the sketch are applied to the 3D features of the part.

Lesson: Using Parameters

When you establish a relationship between one dimension and another, you can incorporate basic design intent into your model and quickly modify a model. You can define and control complex relationships by creating mathematical equations in a dimension or user-defined parameter. Equations can range from simple equations to more complex equations that include complex internal parameters.

The Parameters dialog box is shown here. The Key Parameters control specific design values. These parameters are a crucial to the eventual publication of Autodesk Factory Design Suite assets.

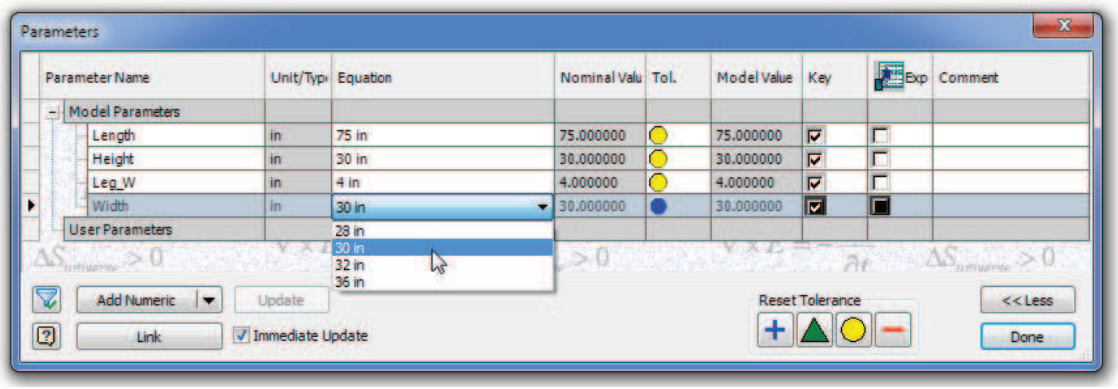

Access

Parameters

Ribbon: *Manage* tab > Parameters panel

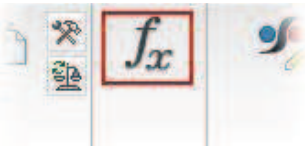

To establish a valid relationship to a parameter name, the spelling and capitalization must exactly match the name displayed in the Parameters dialog box. Select a custom parameter name from the list to ensure that spelling and capitalization match.

Parameters Dialog Box

The Parameters dialog box is displayed when you start the Parameters tool.

The following illustration shows the Parameters dialog box with model, reference, and user parameters. Notice that some model parameters were renamed to clarify use and facilitate access. The equations in this example range from a single numeric value to more complex equations that use functions and parameters.

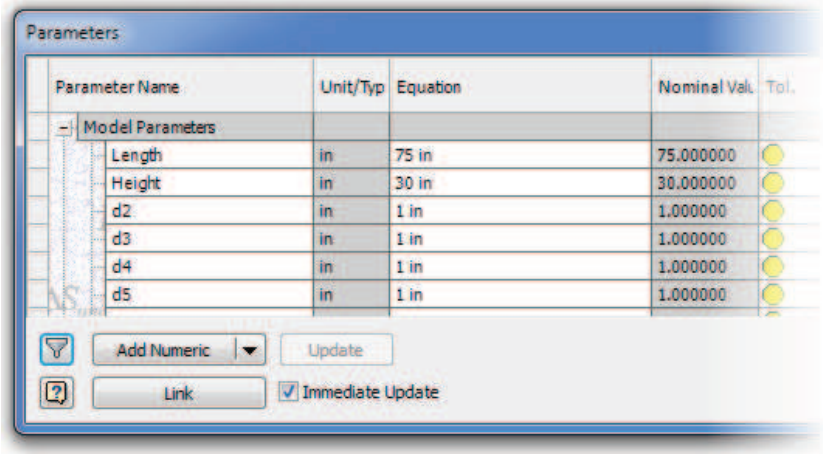

Managing Parameters

Every dimension that you add when you create or assemble parts is accessible in the Parameters dialog box. You can manage parameters in the Parameters dialog box to accomplish the following tasks:

- Create new user parameters.
- Change the name of model and user parameters to add meaning. For example, you can give model parameters a generic letter d and an incremental number (d0, d1, d2, and so on).
- Change the unit of measure to match your design data. For example, you can create a user parameter to store a volume value and use it later in an equation to calculate the size of a part.
- Establish a mathematical equation to calculate a value.
- Add or adjust the tolerance or precision for a dimension.
- Adjust a dimension with tolerances at the maximum, minimum, median, or nominal value.
- Select a parameter to export to a custom iProperty value.
- Add a general comment to explain the function or purpose of a parameter.
- Mark Key Parameters for Factory Asset Publication.
- Add multiple values for specific key parameters.

List Parameters

You can select an existing custom parameter name for any dimension value. Right-click the value or click the arrow button on the right side of the value and click List Parameters to display a list of available custom parameter names.

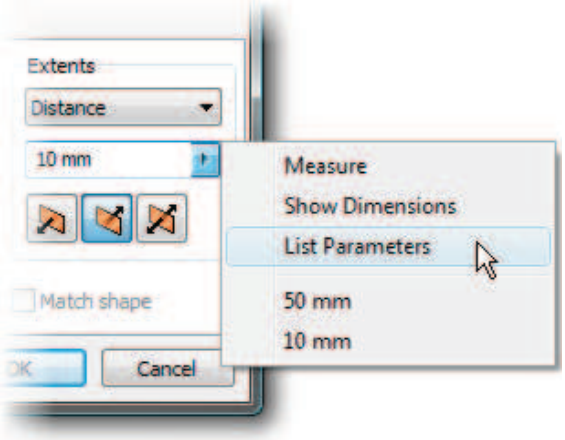

In this image, you right-click the value **10** or select **List Parameters**.

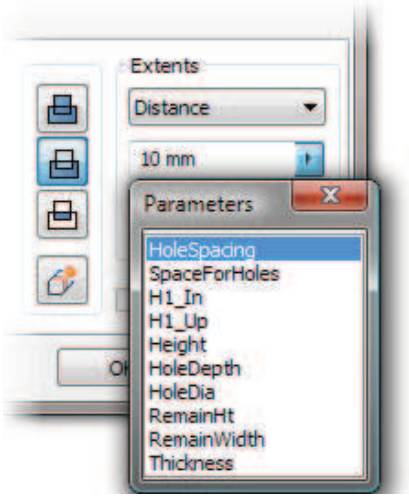

This image shows the Parameters list that opens when you select **List Parameters**.

Using Equations and Parameters

You can use equations wherever you can enter a numeric value. For example, you can write equations in the Edit Dimension dialog box, feature dialog boxes, and the Parameters dialog box. Equations can vary in complexity, and you can use them to calculate feature sizes, calculate assembly constraint offsets or angles, or simulate motion among several components.

Equations can be simple or contain many algebraic operators, prefixes, and functions. For example, here is a simple equation:

2 ul * (6 + 3)

The following complex equation uses internal parameters such as pi:

(PI rad /5 ul + (25 deg * PI rad / 180 deg))

Supported Algebraic Operators

The following table lists the algebraic operators supported by Autodesk Inventor.

Operator	Meaning
+	addition
-	subtraction
%	floating point modulo

Operator	Meaning
*	multiplication
/	division
^	power
(	expression delimiter
)	expression delimiter
;	delimiter for multiargument functions.

Supported Unit Prefixes

The following table lists the unit prefixes supported by Autodesk Inventor.

Prefix	Symbol	Value
exa	E	1.0e18
peta	P	1.0e15
tera	T	1.0e12
giga	G	1.0e9
mega	M	1.0e6
kilo	k	1.0e3
hecto	h	1.0e2
deca	da	1.0e1
deci	d	1.0e-1
centi	c	1.0e-2
milli	m	1.0e-3
micro	micro	1.0e-6
nano	n	1.0e-9

Prefix	Symbol	Value
pico	p	1.0e-12
femto	f	1.0e-15
atto	a	1.0e-18

When you use unit prefixes in an equation, enter the prefix symbol. Do not enter the prefix itself. For example, an equation that includes the unit *nanometer* might look like this: 3.5 ul * 2.6 nm.

When you add the unit prefix for nano to the meter unit, your equation is calculated based on the length of 2.6 nanometers.

Prefix symbols are case sensitive. You must enter them exactly as they appear in the previous table.

Supported Functions

The following table lists the supported functions.

Syntax	Returns Unit Type	Expected Unit Type
cos(expr)	unitless	angle
sin(expr)	unitless	angle
tan(expr)	unitless	angle
acos(expr)	angle	unitless
asin(expr)	angle	unitless
atan(expr)	angle	unitless
cosh(expr)	unitless	angle
tanh(expr)	unitless	angle
acosh(expr)	angle	unitless
asinh(expr)	angle	unitless
sqrt(expr)	unit^1/2	any

Syntax	Returns Unit Type	Expected Unit Type
sign(expr)	unitless	any (Return 0 if negative, 1 if positive.)
exp(expr)	unitless	any (Return exponential power of expression; for example, return 2 for 100, 3 for 1000, and so on.)
floor(expr)	unitless	unitless (Next lowest whole number.)
ceil(expr)	unitless	unitless (Next highest whole number.)
round(expr)	unitless	unitless (Closest whole number.)
abs(expr)	any	any
max(expr1;expr2)	any	any
min(expr1;expr2)	any	any
ln(expr)	unitless	unitless
log(expr)	unitless	unitless
pow(expr1;expr2)	unit^expr2	any and unitless, respectively
random(expr)	unitless	unitless
isolate(expr;unit;unit)	any	any

Function names are case sensitive. You must enter them exactly as they appear in the previous table.

Unit Types

The unit type that you use with an equation depends on the type of data that you are evaluating. For example, to evaluate a linear or angular value, you typically use a unit type of millimeters, inches, or degrees (mm, in, or deg).

Some equations must return a unitless value, for example, an equation to solve the number of occurrences in a pattern. You designate a unitless value with the characters ul. For example, 5 ul means that the equation has been evaluated and returned the number 5, as in the number of occurrences in a pattern.

Unit Types: Keep Them Consistent

Keep units consistent within equations containing parameters that represent different unit types. You can do this using the Isolate function. For example, to calculate the number of occurrences for a pattern that is based on one occurrence for each unit of a parameter named Width, your linear equation would be:

isolate(Width;mm;ul)

The Number of Occurrences value in a dialog box requires a unitless (ul) result, but you are referencing the unit width, which is a linear value. Therefore, you must convert the Width parameter to a unitless value.

The following illustration shows how to break down the equation.

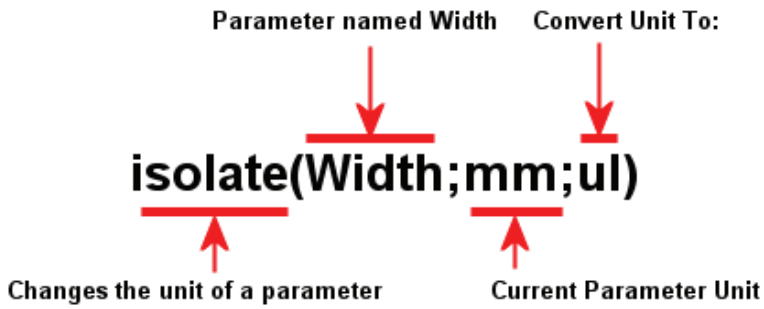

Order of Algebraic Operations

Equations are evaluated from the inside out, and evaluation precedence is given to functions. For example, in the equation **(15 * (25 + 3))**, 25+3 is evaluated first, and the sum is multiplied by 15. The result is 420.

The following table shows the algebraic operations in descending order.

Operation	Symbol	Example
parentheses	( )	(abs(5 * -2))
exponentiation	^	Length^2
negation	-	(-4.00 + Width)
multiplication or division	* or /	(Length * Width) or (Length / Width)
addition or subtraction	+ or -	(-5.00 + Length - 0.50 * Width)

Equation Color

When you create equations, the equation text is displayed in red until it is considered valid. At that point, the equation text turns black.

Procedure: Using Equations in Dimensions

The following steps outline how to use equations in dimensions.

1. On the ribbon, click the **General Dimension** tool.
2. Select the geometry that you want to dimension.
3. Place the dimension.
4. In the Edit Dimension dialog box, enter the equation.

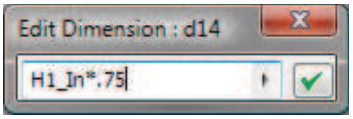

5. Click the check mark icon to accept the value.

Procedure: Using Equations in a Dialog Box

The following steps outline how to use equations in a dialog box.

1. On the ribbon, click the feature type that you want to create.
2. Select the geometry required for the feature.
3. Enter the equation in any text box that requires a numerical value.

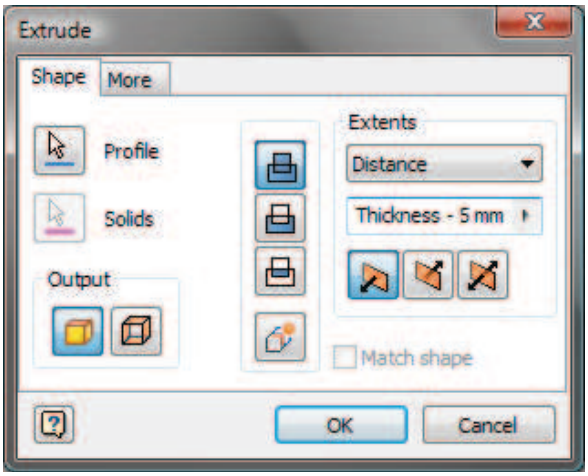

4. Click OK to create the feature and close the dialog box.

Exercise: Edit Parametric Parts

In this exercise, you implement changes to the clutch ever by editing sketches and features. You discover that changing one feature may create problems with other features that you will then need to edit as well.

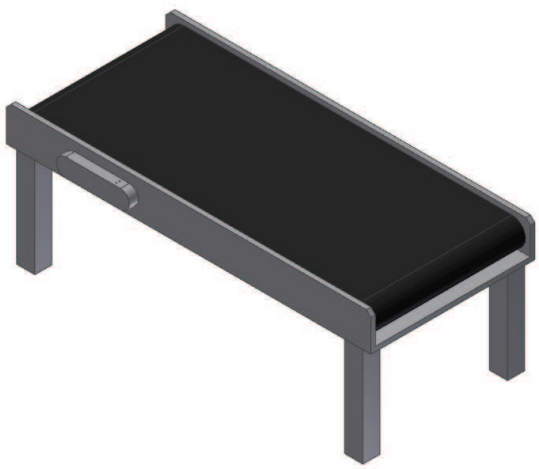

The completed exercise

1. Open **INV_007_Edit Feature.ipt**.

2. Display the dimensions on the original base sketch for editing:
   - In the browser, right-click Extrusion1.
   - Click **Show Dimensions**.

3. Modify the 75 in dimension:
   - Double-click the 75 in dimension and change it to **80 mm** and click the green checkmark.
   - On the Quick Access toolbar, click **Update**.

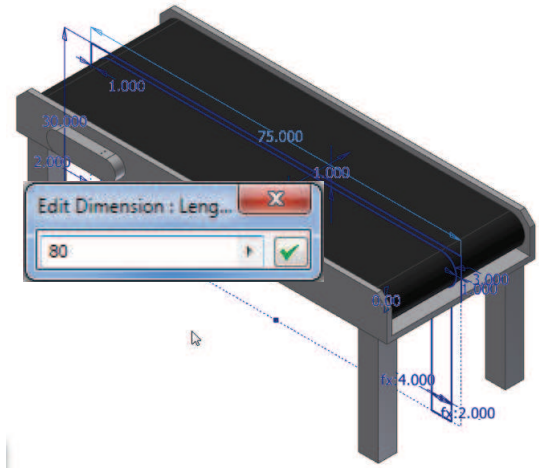

4. Edit a sketch.
   - In the browser, right-click **Extrusion7**.
   - Select **Edit Sketch**.

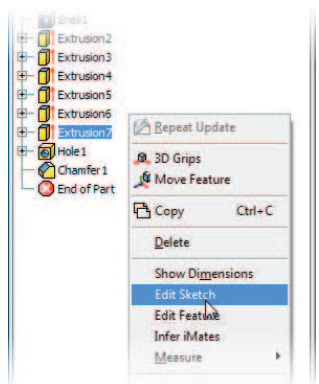

5. Change the Dimension that controls the motor extrusion location:
   - Change the Value of the locating dimension from 10 to **15** and click the green check mark.
   - Click the **Finish Sketch** button on the Sketch ribbon.

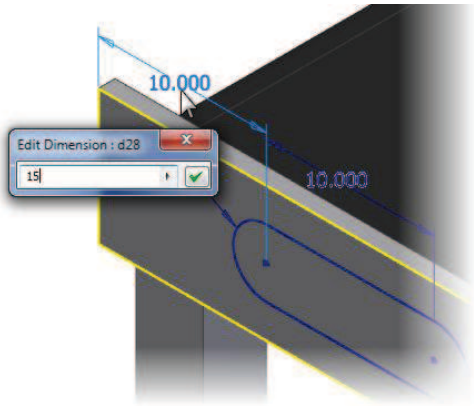

6. Change the counterbore holes to countersink clearance holes:
   - In the browser, right-click Hole1. Click **Edit Feature**.
   - In the Hole dialog box, set hole type to Countersink (1) and Clearance (2) by clicking the option button as shown.
   - Under Fastener, for Standard, select **Ansi Metric M Profile** (3).
   - For Fastener Type, select **Flat Head Machine Screw** (4).
   - For Size, select **M2.5** (5). Click **OK**.

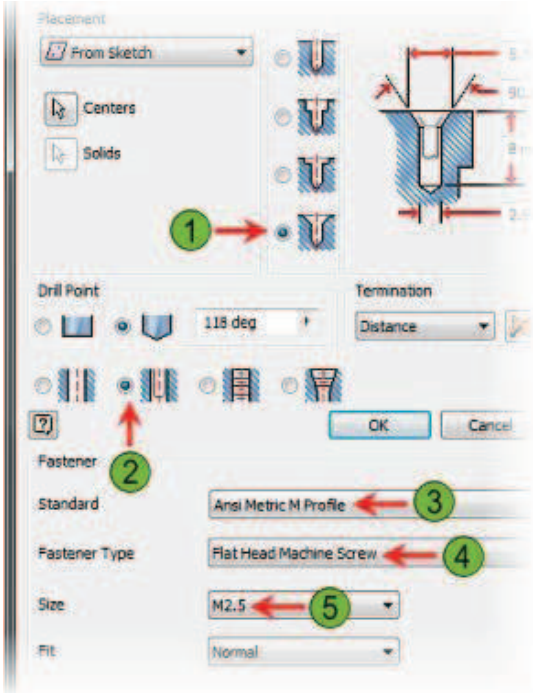

Note: The holes are shown in this exercise for instructional purposes only. Small holes are usually not included on factory assets. Factory assets should be modeled with a minimal or simplistic form to save computing time.

7. Modify the depth of the main extrusion:
   - In the browser, double-click **Extrusion1**. The Extrude dialog box is displayed.
   - Change the 30 in to **36** in.
   - Click OK.

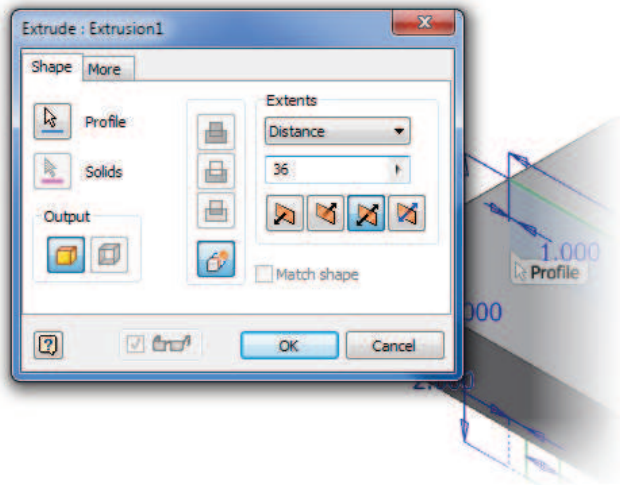

8. Modify the motor size of Extrusion7:
   - In the browser, expand Extrusion7.
   - Double-click Sketch7 to display its dimensions on the model.
   - Double-click the 10 in dimension and change it to **12** in as shown.
   - On the Sketch Ribbon, click **Finish Sketch**.

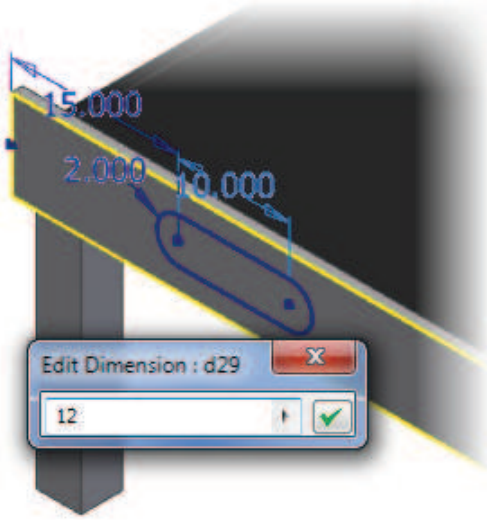

9. Change the size of the chamfer on the Channel:
   - In the browser, right-click Chamfer1. Click Edit Feature.
   - Change the Distance value to **2** in to **1** in and click OK to implement the change.

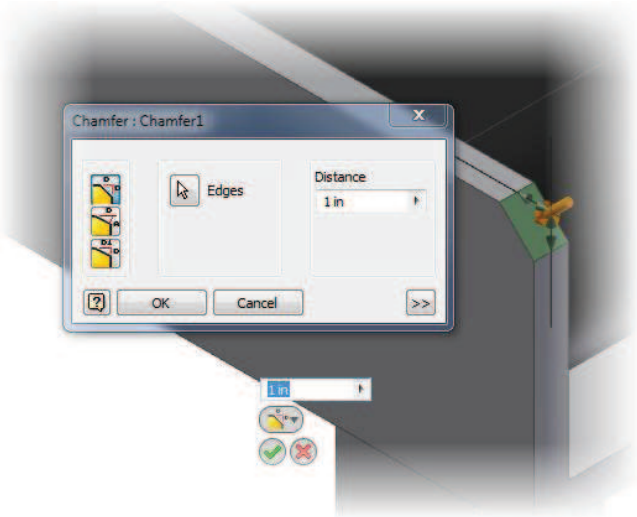

10. Close all files. Do not save.

Exercise: Create Parameters and Multi-Value Parameters

In this exercise you add additional values to the named parameters you created in the earlier exercises. These values will be available when placing the asset component on the factory layout.

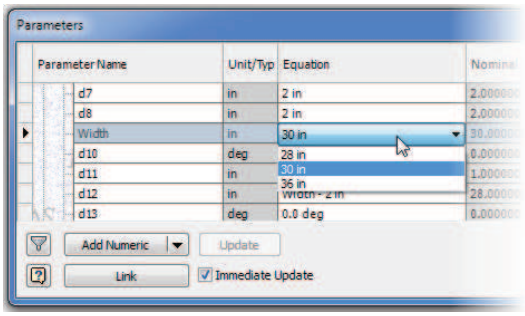

The completed exercise

1. Open **INV_008_Parameters.ipt**.

2. Parameters dialog box:
   - In the Parameters dialog box, select the model parameter d0. Change its name to **Length**. Press ENTER.

   Note: In previous exercises you already established the name of d0 as **Length**. This step simply demonstrates an alternative method of naming parameters.

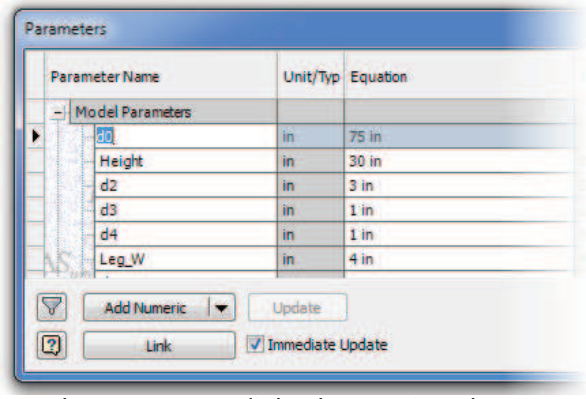

In the Parameters dialog box, review the existing model, reference, and user parameters. Notice any custom parameter names or parameters with an existing equation instead of a single numeric value.

   - Click Done.

3. Mark your Key Parameters.

   Place a checkmark in the Key column for the parameters you wish to modify when placing the asset on the factory floor.
   - Place checkmarks in the Key column for the Length, Height, and Width.

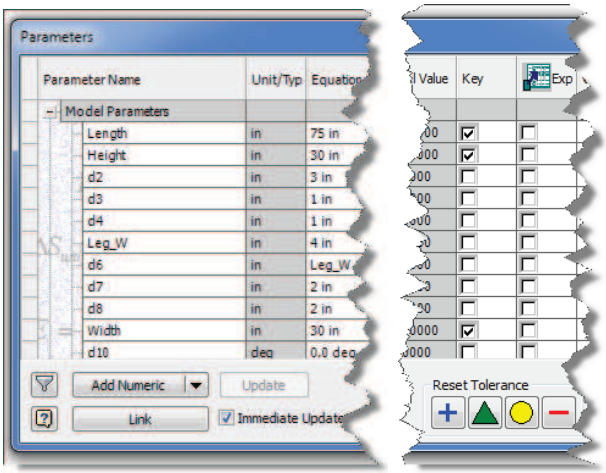

4. Add Multiple values to a parameter.

For this asset, the Length and Height might be altered to any custom value. The Width of the Conveyor must be one of three explicit values **28 in**, **30 in**, or **36 in**.

- Right-click on the Value cell for Width and select **Make Multi-value**.

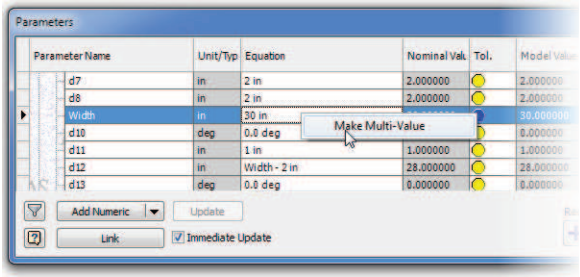

6. Enter the alternative values.

- In the Value List Editor, add **28 in**, and **36 in** in the Add New Items window (1).
- Click **Add** (2) and then OK.

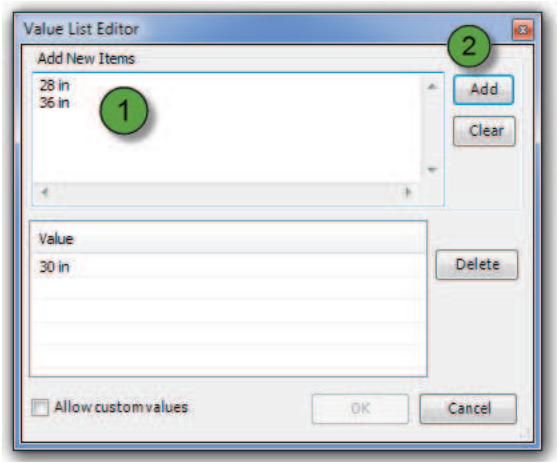

7. Test the functionality of the available parameters

Modify the values for Length, Height, and Width, and notice the effect on the model. Notice that the Width Value displays as a drop down window with the alternative values listed for selection while the Length and Height values allow any custom value to be applied.

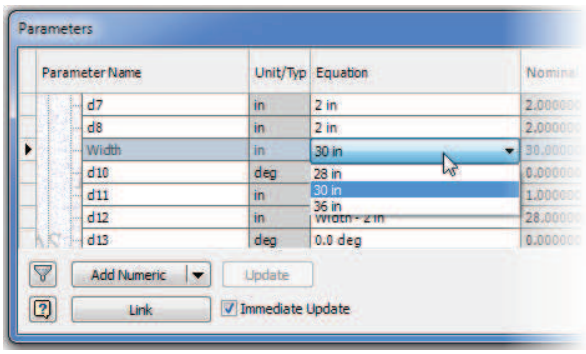

8. Return the Parameters to the original values and close the file without saving.

Lesson: Creating Work Features

In this lesson, you learn to create and use work planes, work axes, and work points. You use these work features to assist in creating geometry, placing constraints, and completing other modeling tasks.

The construction of most part models requires the use of work features to complete. The more complex your parts, the more work features you will likely use while creating it.

The following illustration shows how work planes, axes, and points are displayed in your parts. Work features help define the connector point that will be added to the asset during publication.

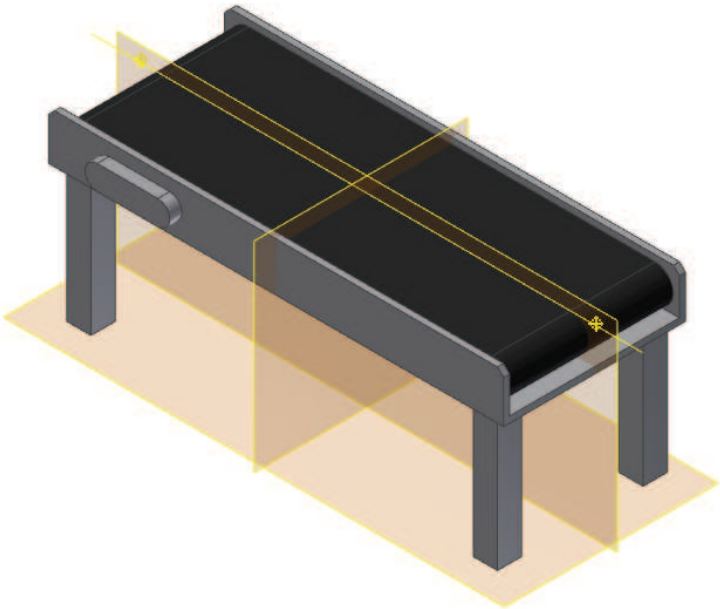

Objectives

After completing this lesson, you will be able to:

- Locate, display, and use the default work features and create new work features on a part.
- Use the Work Plane tool to create work planes on a part.
- Use the Work Axis tool to create work axes on a part.
- Use the Work Point tool to create work points on a part.

About Work Features

Every part contains a default set of work planes, work axes, and a center point. These default work features are located in the Origin folder of the Part browser. You use these default work features to define the initial orientation of your part design. You can use these default objects for the basis of new sketches, for feature termination options, and as the basis for creating new work features. As your part design progresses, you may need to create additional work plane, work axis, and work point features that are based on faces, edges, and vertices of your part.

The following illustration shows the default work planes, axes, and center point located in the Origin folder of the browser.

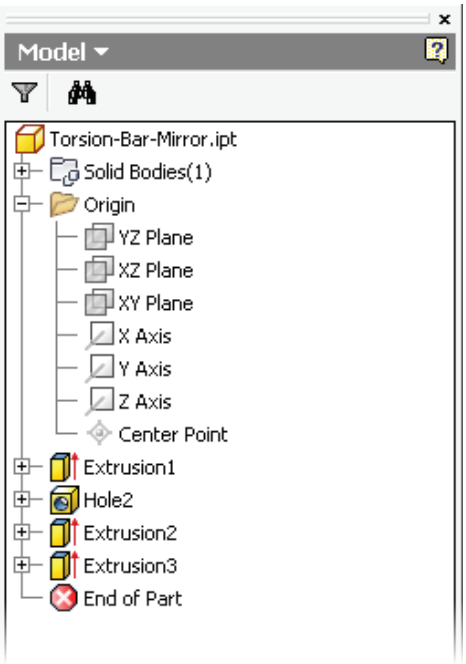

Definition of Default Work Features

There are three default work planes, each representing a different coordinate plane. The three planes represented are the *YZ* plane, *XZ* plane, and *XY* plane. There are three default work axes, each representing a different coordinate axis. The three axes represented are the *X* axis, *Y* axis, and *Z* axis. There is a single Center Point work point, it represents the 0,0,0 coordinate. Work planes and work axes extend outward from this point.

When you create a new part file, the initial sketch is created on one of these default planes. You can create additional sketches or features using the model or the default work planes.

The following illustration shows the three default work planes and the center point.

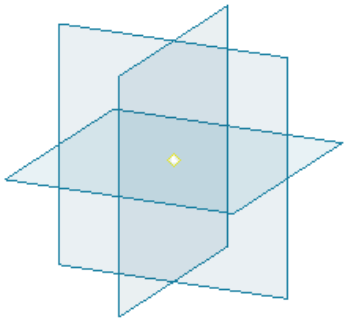

The following illustration shows the three default work axes and the center point.

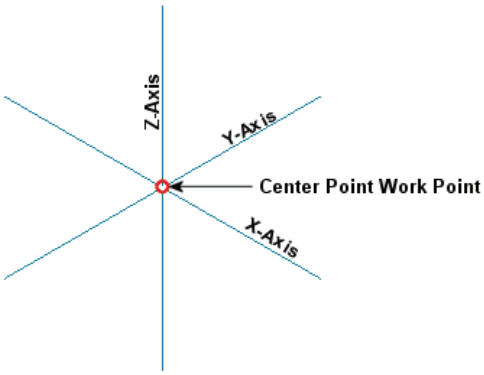

The default planes are not visible when starting a new part file. You can control their visibility in the browser. The following illustration shows all of the default work features selected in the browser. By clicking on Visibility, they will all become visible in the drawing.

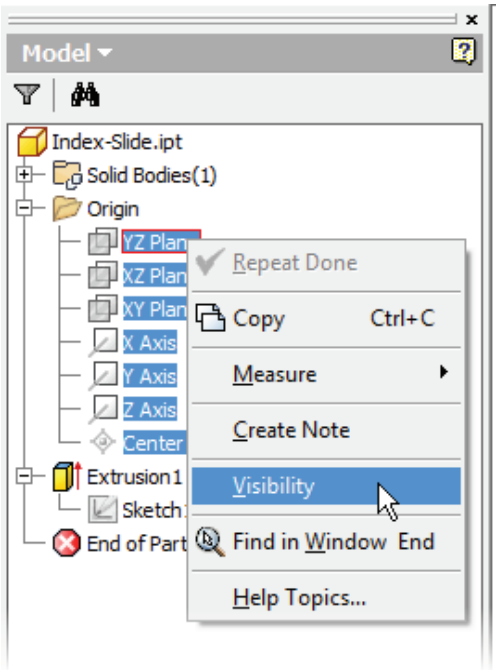

Parametric Work Features

You create and use work features when physical geometry does not exist on the part for a specific task. For example, as you develop your part design, you typically orient sketches for your features on existing planar faces of the part. When a planar face does not exist, you can create one or more work features to define and orient a plane for that sketch.

Example of Parametric Work Features

In the following illustration, two work axes were used to create a centerline work plane. This work plane is then used to create a sketched feature on the end of the part.

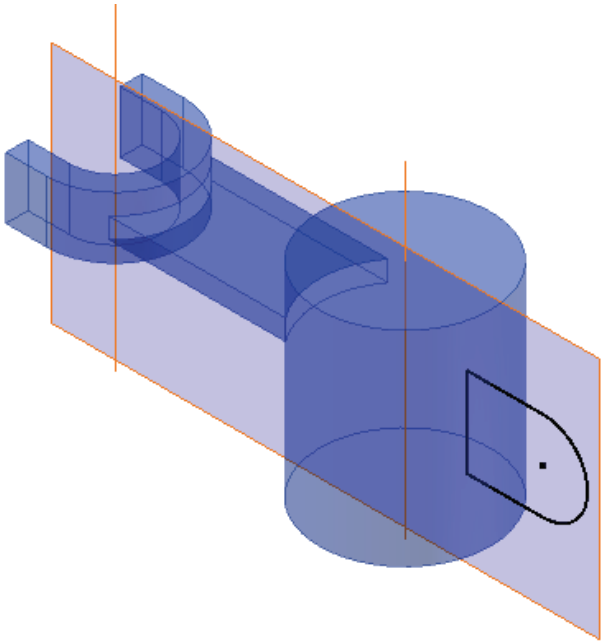

Browser Appearance of Parametric Work Features

The following illustration shows how work features are displayed in the browser.

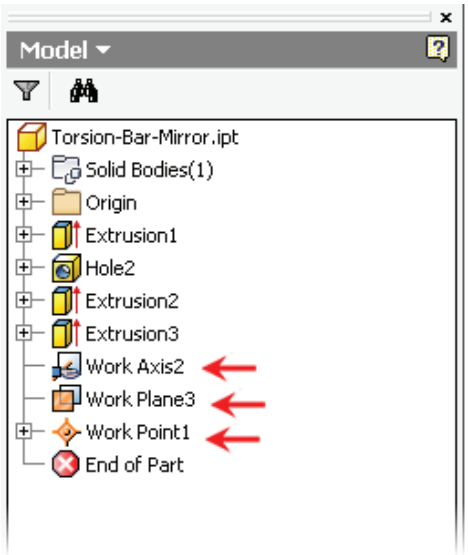

Work Feature Appearance

The appearance of work features is controlled in several different ways. You can turn on or turn off the appearance of work features individually or globally. To turn off the visibility of a single work feature, right-click in the browser and click **Visibility**.

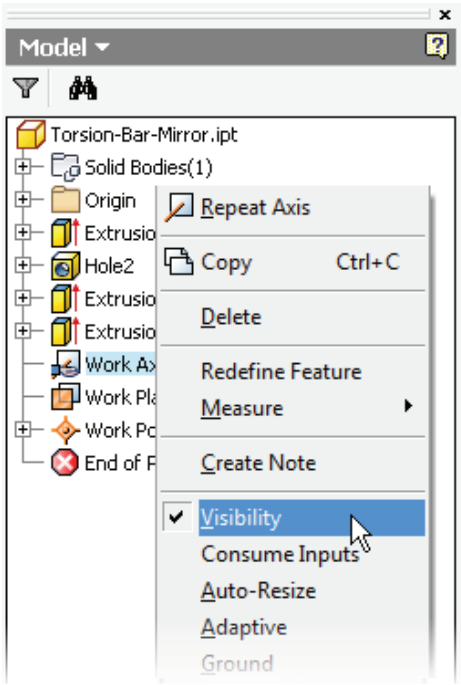

Controlling Global Visibility

On the ribbon, click View tab > Object Visibility to turn the visibility of work features and sketches on and off, as shown in the following image. Select the appropriate option. You can also use the keyboard shortcuts.

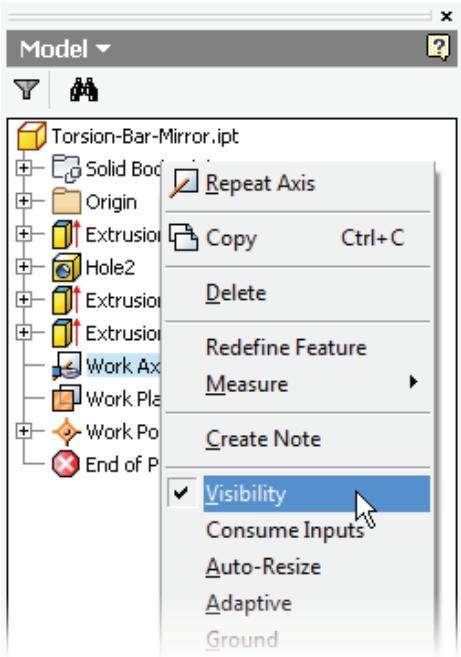

Creating Work Planes

You use the Work Plane tool to create work planes in the current part. Work planes are used to define planar surfaces when the existing geometry does not represent the required plane. When you create work planes, you select geometry and/or other work features. Each selection defines either orientation or position for the new work plane. Work planes are parametrically attached to the model geometry or default work planes. When you create a work plane using features of existing geometry, if the geometry changes, the work plane also changes. For example, if you create a work plane that is tangent to a cylindrical surface with a radius of 2 mm, and that radius later changes to 5 mm, the work plane moves to retain the tangent relationship with the cylinder.

Uses for Work Planes

The following list summarizes some potential uses for work planes:

- Basis for new sketches
- Feature termination options
- Basis for new work features

In the following illustration, the work plane (1) is created at a 30-degree angle from a part face. The circular extrusion (2) is created from the work plane extruding to meet the part face. As the angle of the part face changes, the work plane updates to maintain the 30-degree angle, and the circular feature changes with the work plane.

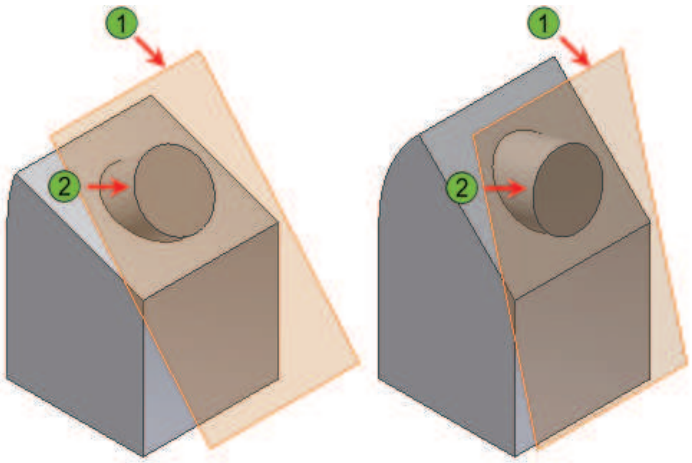

Access

Work Plane

Ribbon: **Model tab > Work Features panel**

Keyboard Shortcut: **]**

Creating Work Planes: Process Overview

When you create work planes, the type of work plane is based completely on the geometry you select. For example, there is no dialog box to create a planar offset work plane. All work planes are created based on two or three selections. Each selection represents either an orientation or position.

Follow these steps to create a work plane that is aligned with the Origin *XY* plane and tangent to the outside of the cylinder.

1. Select the feature or plane.

2. Select the second feature or plane.

The resulting work plane is created.

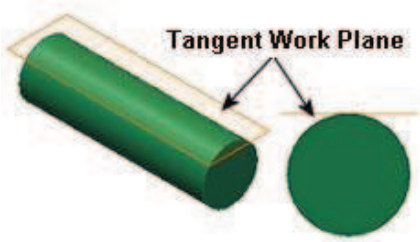

Procedures: Creating Work Planes

When you create work planes, the type of work plane is based completely on the geometry you select. For example, there is no dialog box to create a planar offset work plane. All work planes are created based on two or three selections. Each selection represents either an orientation or position.

Use the following approaches to create work planes.

Aligned to Origin Plane/Tangent to Cylindrical Surface

Selection 1 - Origin Work Plane

Selection 2 - Cylindrical Feature

Result

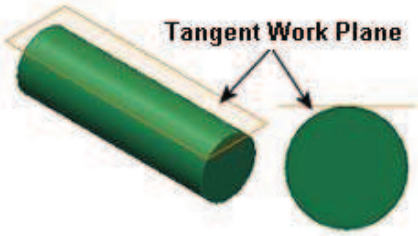

Aligned to Face/Midpoint Between Two Faces

Selection 1 - Part Face

Selection 2 - Part Face

Result

Offset from Plane or Surface

Selection 1 - Click and drag from plane or surface

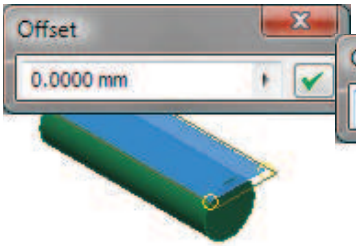

Selection 2 - Release the mouse and enter an offset distance

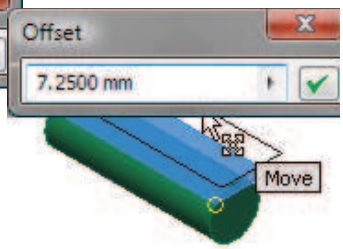

Result

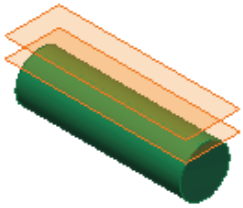

Angle from Face/Along an Edge

Selection 1 - Edge on Part

Selection 2 - Planar Surface on Part, Enter Angle

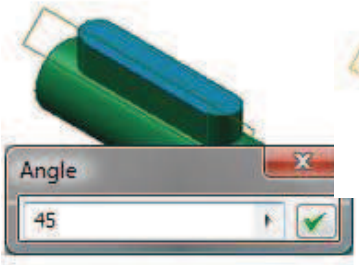

Result

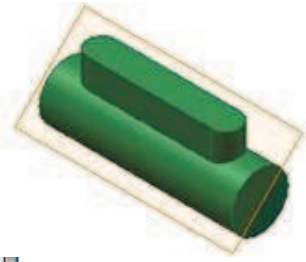

Work Plane on Three Points

Selection 1 - Vertex on Geometry

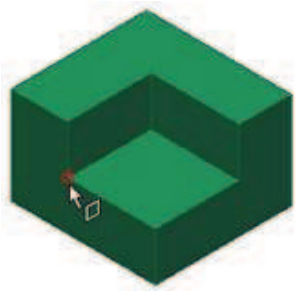

Selection 2 - Vertex on Geometry

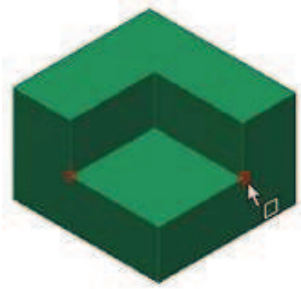

Selection 3 - Vertex on Geometry

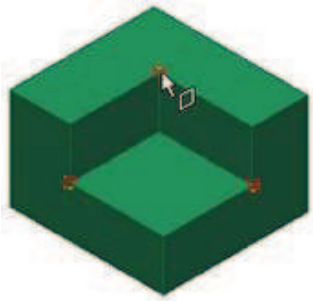

Result

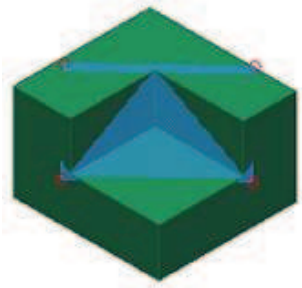

Parallel to Face/Midpoint of Edge

Selection 1 - Plane/Face

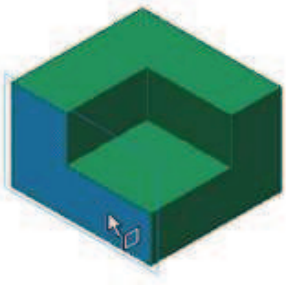

Selection 2 - Midpoint of Edge

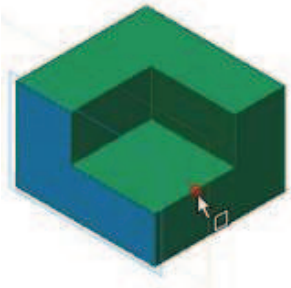

Result

Procedure: Resizing Work Planes

Place your cursor over the corner of the work plane. When the resize indicator appears, click and drag the corner of the work plane to resize it.

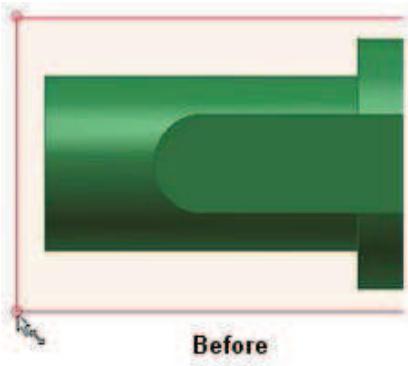

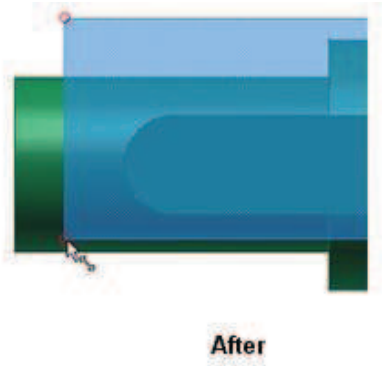

Procedure: Moving Work Planes

Place your cursor over an edge of the work plane. When the move indicator appears, click and drag the work plane to a new location within that same plane. In the following illustration, the move indicator is displayed (1) and the work plane is moved to a new location (2).

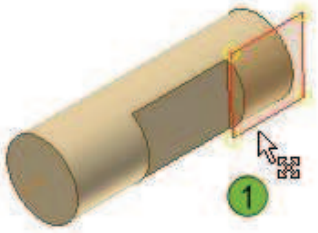

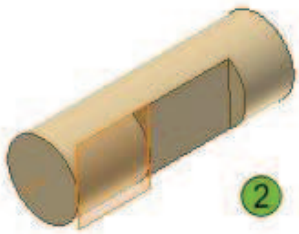

Creating Work Axes

The Work Axis tool is used to create work axes in the current part. Work axes are used to define an axis when the existing geometry does not represent the required axis. Work axes are parametrically attached to the model geometry and/or default work features. When you create a work axis using features of existing geometry, if the geometry changes, the work axis updates to reflect those changes.

Uses for Work Axes

The following are some potential uses for work axes:

- Axis of revolution for circular pattern
- Basis for new work features
- Representation of centerlines on sketches

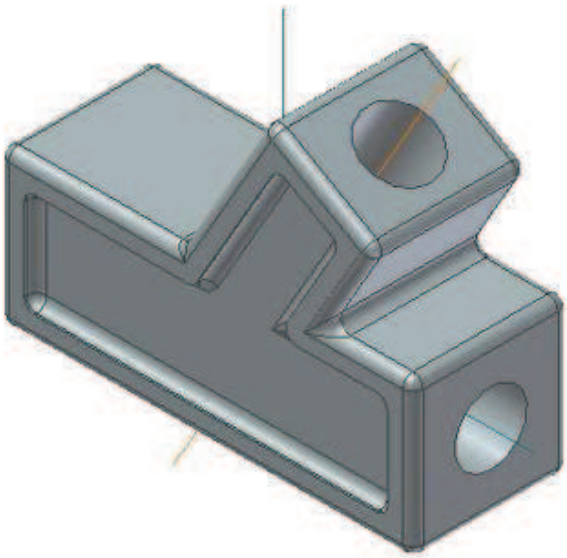

Access

Work Axis

Ribbon: **Model tab > Work Features panel**

Keyboard Shortcut: /

Procedure: Creating Work Axes

When you create a work axis, the type of work axis is based completely on the geometry you select. For example, there is no dialog box to create an axis at the intersection of two planes. All work axes are created by selecting existing geometric features or other work features. Follow these steps to create a work axis.

Procedures: Creating Work Axes

Use the following approaches to create work axes.

Work Axis at Center of Circular Feature

Selection 1 - Circular Feature

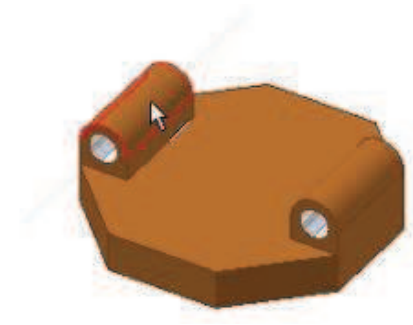

Result

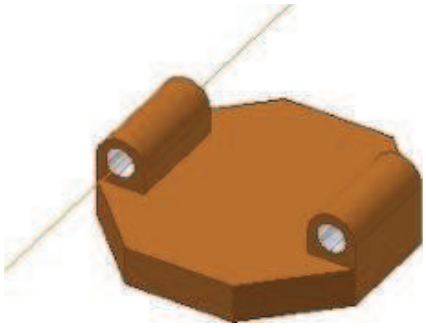

Work Axis at Intersection of Two Planes

Selection 1 - Plane or Planar Surface

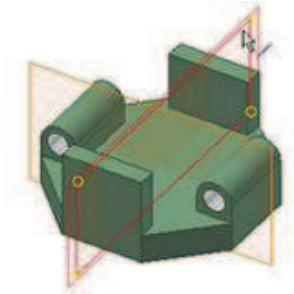

Selection 2 - Plane or Planar Surface

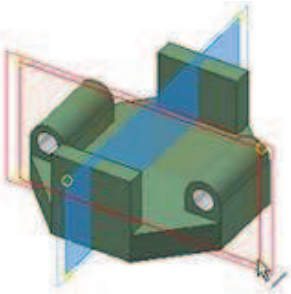

Result

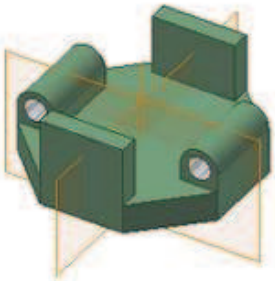

Work Axis Through Point/Normal to Plane

Selection 1 - Plane or Planar Surface

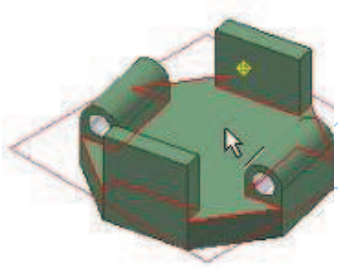

Selection 2 - Point

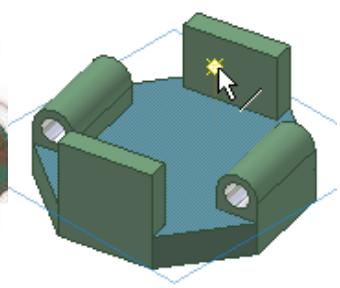

Result

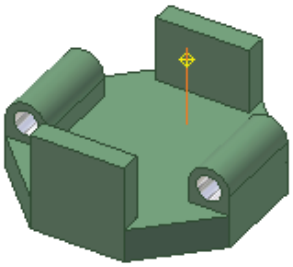

Work Axis Through Two Points

Selection 1 - Point or Midpoint

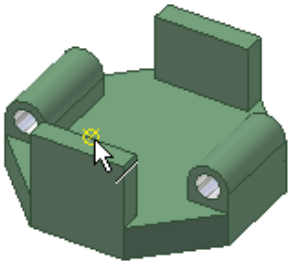

Selection 2 - Point or Midpoint

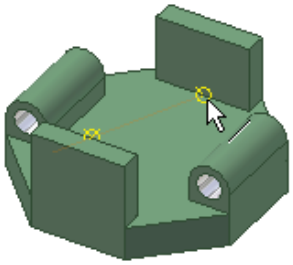

Result

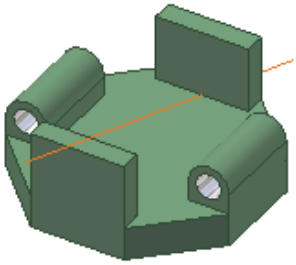

Creating Work Points

You use the Work Point tool to create parametric construction points on part features. Several methods are available for creating these work points. Each method creates a work point that is parametrically attached to the geometry or other work features. If this geometry changes, the work point changes accordingly.

Work points are used as construction geometry to assist in the creation of other geometry and features.

Grounded Work Points are fixed in space and have no association to other geometry. In part files, you place grounded work points at vertex points on the part. Once placed, you can modify the point using options found on the short cut menu.

Uses for Work Points

The following are some potential uses for work points:

- Projection onto sketches.
- Basis for new work features.
- Creation of 3D sketches by drawing lines between work points.

Access

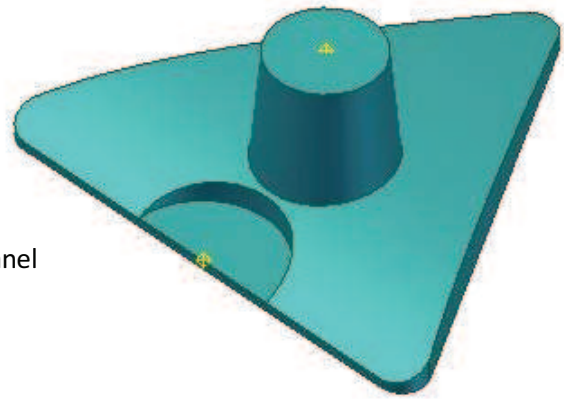

Work Point

Ribbon: *Model* tab > Work Features panel

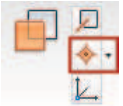

Keyboard Shortcut: .

Access

Grounded Work Point

Ribbon: *Model* tab > Work Features panel

Keyboard Shortcut: ;

Procedures: Creating Work Points

Use the following approaches to create work points.

Creating a Work Point on a Vertex

1. On the panel bar, click the **Work Point** tool and select a vertex on the part.

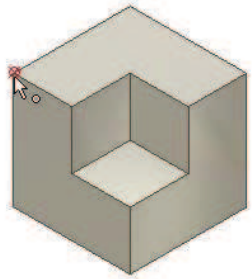

2. The work point is created on the selected vertex.

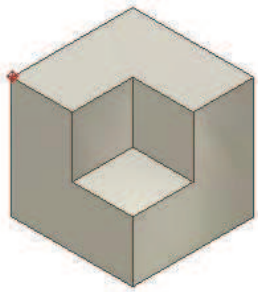

Creating a Work Point at the Midpoint of an Edge

1. On the panel bar, click the **Work Point** tool and select the midpoint of an edge.

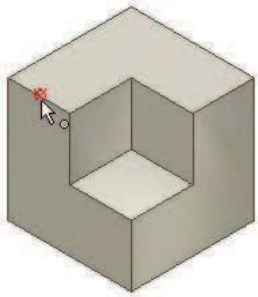

2. The work point is created on the midpoint of the selected edge.

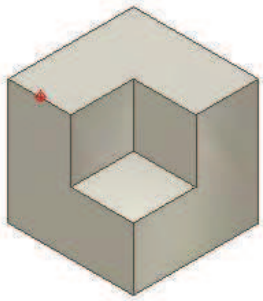

Creating a Work Point at the Intersection of an Edge and Plane

1. On the panel bar, click the Work Point tool and select an edge or axis.

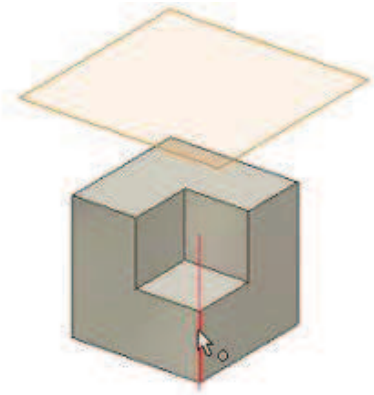

2. Select a plane or surface.

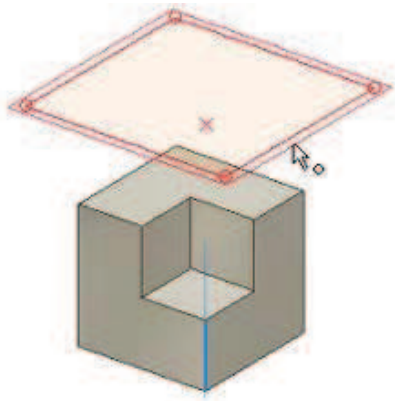

3. The work point is created at the intersection of the edge and plane.

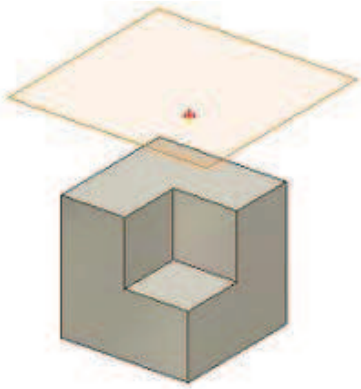

Work Point at the Intersection of a Line or Axis and a Surface

Selection 1: Line or Axis

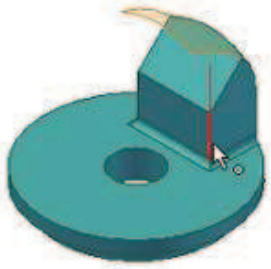

Selection 2: Surface

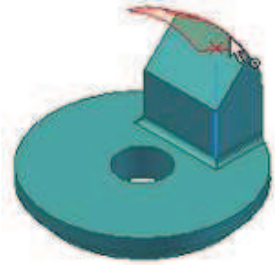

Result

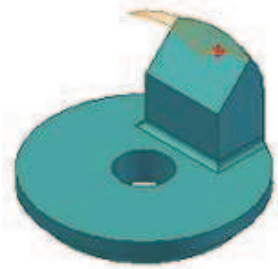

Work Point at the Intersection of a Plane and a Curve

Selection 1: Plane or Face

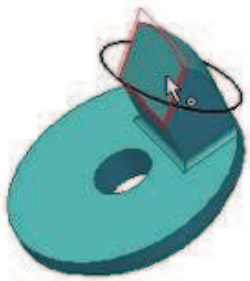

Selection 2: Curve

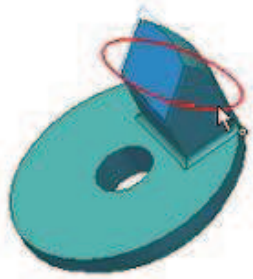

Result

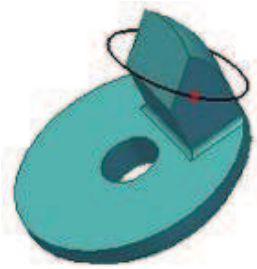

Exercise: Create Work Features

In this exercise, you create work features that will define the connection points for the conveyor asset.

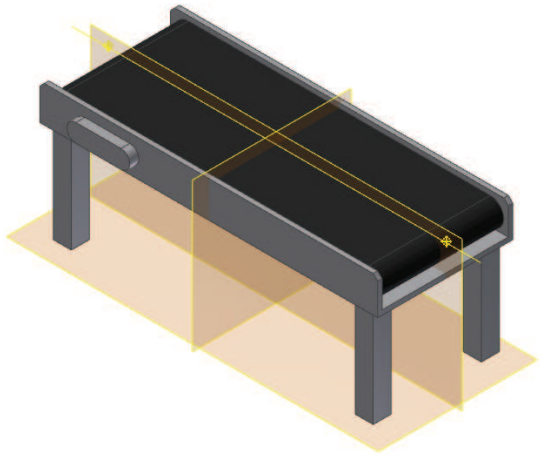

The completed exercise

1. Open **INV_008A_Work_Features.ipt**.
2. Turn on the visibility of the default XY plane.

- In the browser, expand the Origin folder.
- Right-click **XY Plane**.
- Click **Visibility**.

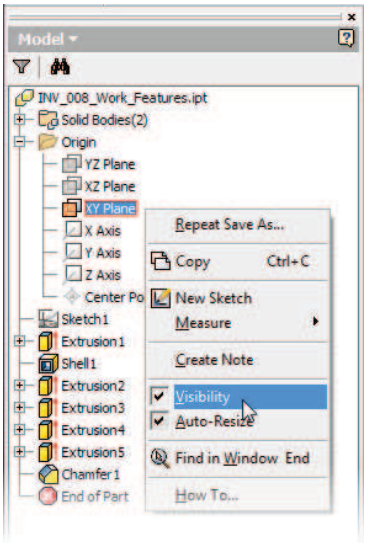

3. Mirror the Motor feature to the other side.
   - On the ribbon, click the **Mirror** tool.
   - Select the motor feature (Extrusion5).
   - Click the **Mirror Plane** button.
   - Select the XY origin plane as shown here. Click OK.

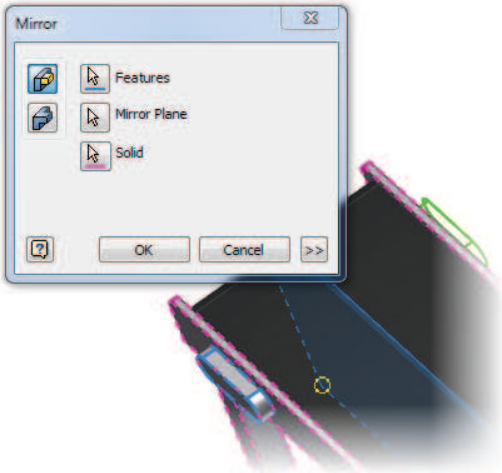

4. Create an Axis that runs along the center of the conveyor belt.
   - On the ribbon, click the **Work Axis** tool.
   - In the browser, select XY Plane.
   - Select the top face of the belt as shown in the following image.

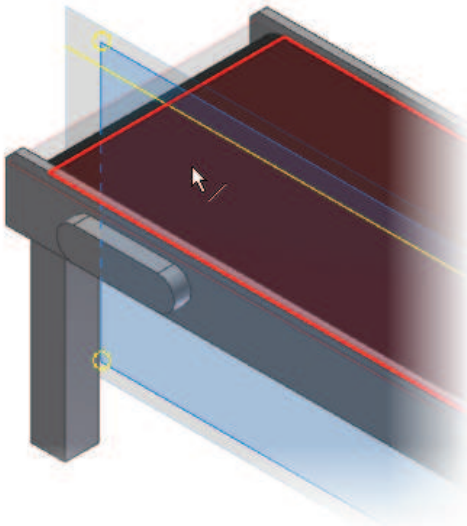

5. Create a workpoints at the intersection of the Axis and the end faces.
   - On the ribbon, click the **Work Point** tool.
   - Click axis and then the right end face as shown in the following image.

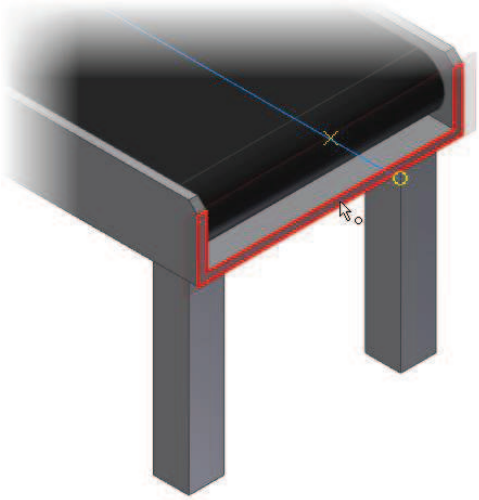

   - Repeat the process creating a workpoint on the left face.

6. In the graphics window, right click the work plane. Click **Visibility** on the shortcut menu to turn off the work plane visibility.

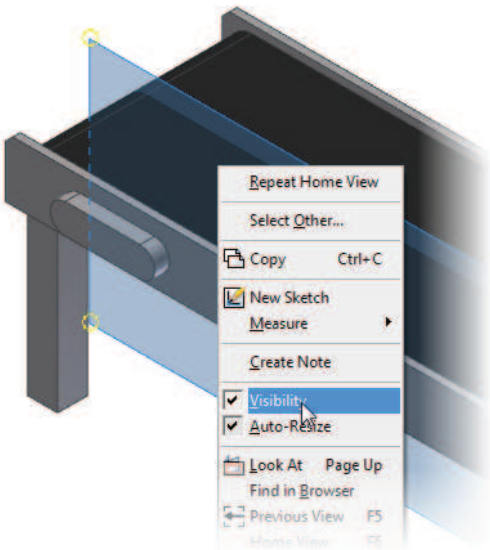

   - Repeat this process for the work axis and work points.

7. Close the file without saving.

Chapter Summary

This chapter presented the tools and recommended workflows for basic shape design. Using these techniques, you can now create more complex 2D sketches at different locations on your part, combine multiple 3D features to create various shapes, and modify those shapes at any time during the design process.

Having completed this chapter, you can:

- Create features using the Extrude and Revolve tools.
- Use reference and construction geometry.
- Use the browser and shortcut menus to edit parametric parts.
- Use the 3D Grips tool to edit part geometry in the context of an assembly and in a stand-alone part.
- Create, locate, and utilize work features to perform modeling tasks.

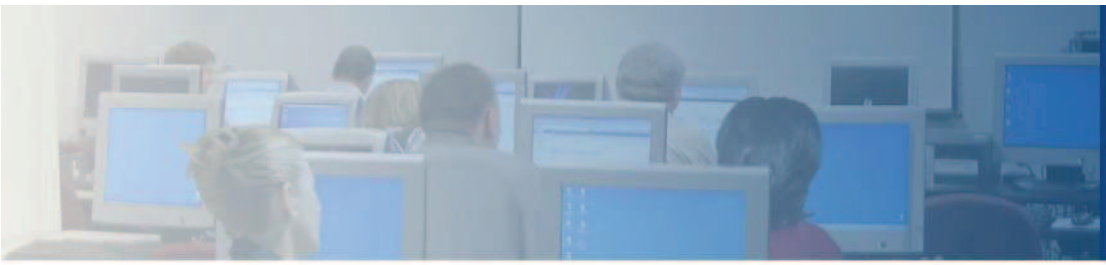

Chapter

8

Detailed Shape Design

This chapter enhances your basic part modeling skills by providing additional tools and recommended workflows for detailed shape design. Common industry practice dictates the use of chamfers and fillets to break sharp corners and relieve stress. Holes and threaded features often must be added for fasteners. Some parts, such as stampings or molds, must be designed as thin-walled shapes. Additionally, most parts include some shapes or features that are patterned or mirrored.

Highly detailed models are usually not used during the Factory Layout Process. Factory assets are created to be a simplified representation of the finished product. As a result the use of the detailed features demonstrated in this section is generally discouraged as a best practice. The placed features outlined and demonstrated in this chapter are provided in case they are required during the simplified asset creation process.

The lessons in this chapter cover the tools required to meet each of these design requirements.

Objectives

After completing this chapter, you will be able to:

- Create both chamfers and fillets on a part.
- Use the Hole tool to place hole features on your part model.
- Create rectangular and patterns and mirror existing features.

Lesson: Creating Chamfers and Fillets

This lesson describes how to create both chamfers and fillets on your part. Fillets are commonly used on a part to reduce the potential of stress cracking, and for aesthetic reasons. Chamfers are used for angled faces, relief clearance, and also for aesthetic purposes.

Chamfer and fillet features are standard on most manufactured components and are among the most widely used placed features on any 3D part.

The following illustration shows a part where all sharp edges have been replaced with fillet or chamfer features.

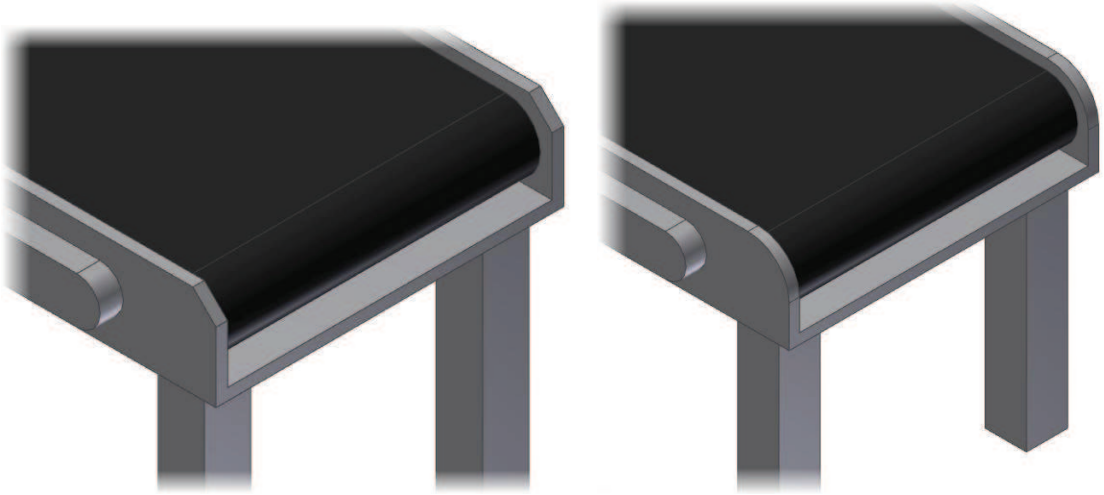

Objectives

After completing this lesson, you will be able to:

- Describe the difference between chamfers and fillets and give an example of how they are used.
- Use the Chamfer tool to create chamfers.
- Use the Fillet tool to create constant radius fillets.
- State the guidelines for creating chamfers and fillets.

About Chamfers and Fillets

A fillet creates a radius edge on an interior or exterior corner of your part, whereas a chamfer bevels an edge. Cast and molded parts rarely have true sharp edges. Chamfer and fillet features are applied to almost all the edges of your part designs. When completing a machined part on the shop floor, you always remove all sharp edges. You also apply this same principle to your parametric part designs.

The following illustration shows a cast part with fillets and rounds on edges and then chamfers placed on the holes to represent the machining process.

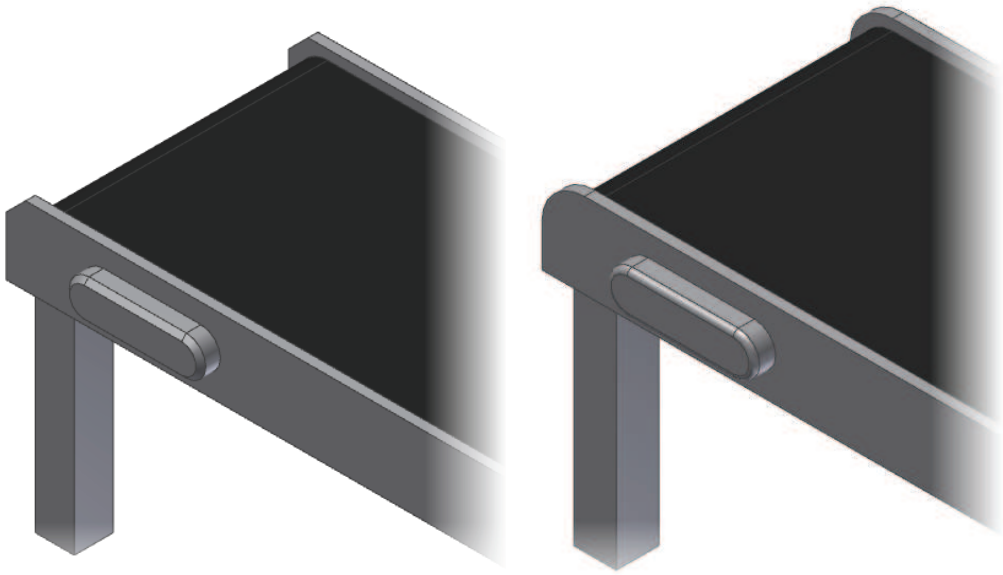

Definition of Fillets

A fillet is defined by a single constant radius, or in the case of a variable radius fillet, by more than one radius. Consider a fillet to be an interior shape, placed between faces of less than 180 degrees, which adds material to your part. A round is an exterior shape placed between faces of any angle, which removes material from your part when created.

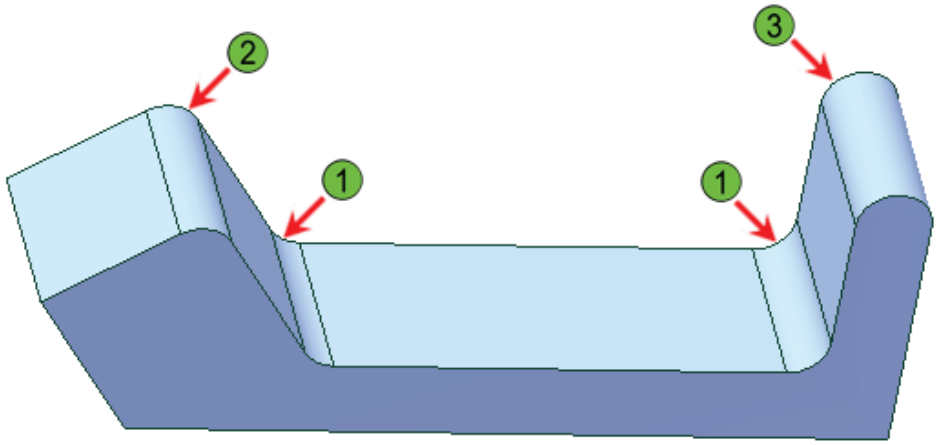

1 Fillet

2 Round

3 Full round

Definition of Chamfers

A chamfer is defined using equal distances, a distance and an angle, or two different distance values. Chamfers are used to break sharp edges and as lead-ins on holes or bosses. Most angles faces in parametric parts are created using chamfers.

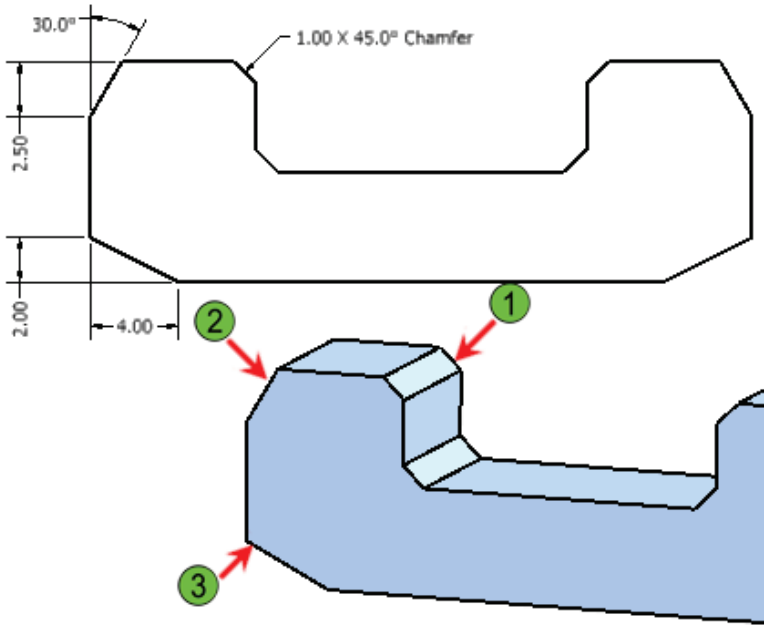

1. Distance
2. Distance and Angle
3. Two Distances

Example of Using Chamfer for a Lead-in

In most circumstances, placing a fastener into a hole is aided through the use of a chamfer. In the following illustration, it is easier to assemble the parts on the right that have a chamfer used as a lead-in.

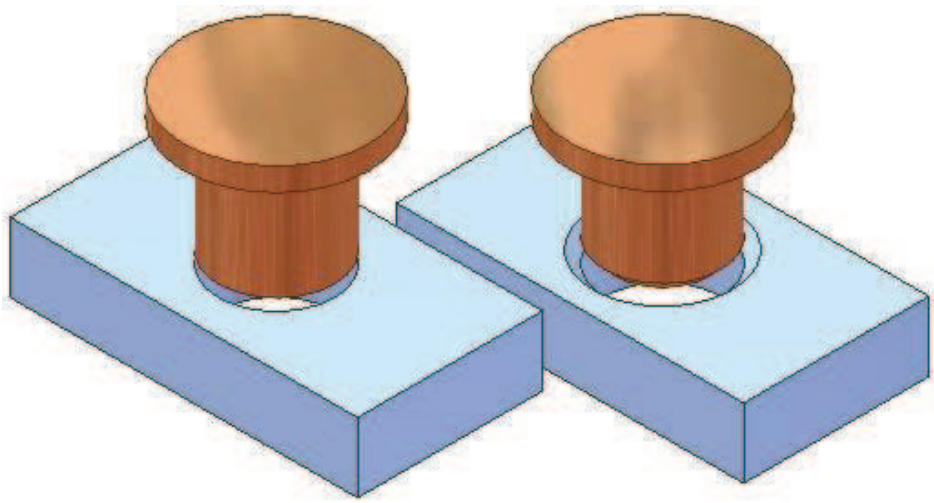

Creating Chamfers

You use the Chamfer tool to add chamfer features to edges on your part. These features, like other features, are fully parametric and easily editable after you create them. When you create chamfer features, you can choose from three different methods which determine how the chamfer is specified. With any of the methods, the end result is the replacement of the selected edge(s) with a face(s) at an angle specified either directly or indirectly through the use of distances.

The following illustration shows a part before and after adding chamfer features.

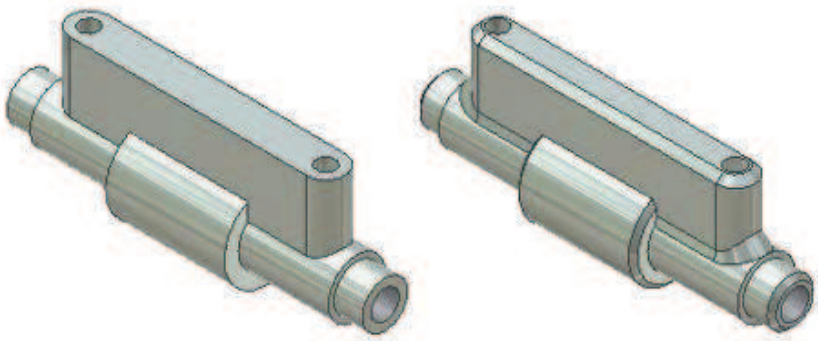

Access

Chamfer

Ribbon: **Model tab > Modify panel**

Keyboard Shortcut: **CTRL+SHIFT+K**

Chamfer Dialog Box

The Chamfer dialog box is displayed when you start the Chamfer tool.

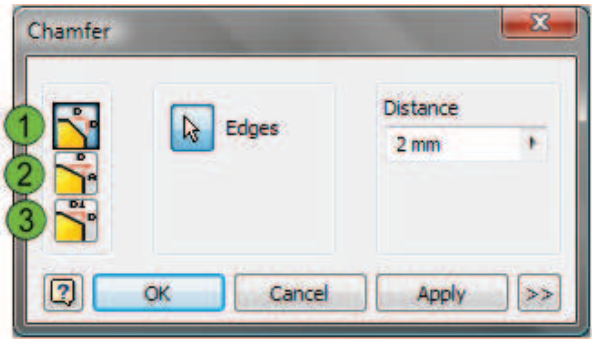

	Option	Description
1	**Distance**	Specify a distance for the chamfer. The distance is applied to both sides of the selected edge, resulting in a 45-degree chamfer.
2	**Distance and Angle**	Select a face adjacent to the edge you are chamfering. The angle is measured from this face. Select the edge(s) to be chamfered. This option is disabled until you select a face. The edge(s) selected must be adjacent to the selected face. Specify a distance for the chamfer. The distance is measured from the selected edge along the selected face. Enter an angle for the chamfer. The angle is measured from the selected face.
3	**Two Distances**	Select the edge to be chamfered. When you use this method, only one edge can be chamfered at a time. Specify the first distance of the chamfer. This distance is measured along one of the adjacent faces. Specify the second distance of the chamfer. This distance is measured along the opposite adjacent face.

Procedure: Creating Chamfers

The following steps describe how to create chamfer features.

1. On the ribbon, click the Chamfer tool.
2. In the Chamfer dialog box, select the desired method to create the chamfer.

- For a single distance chamfer, select the edge(s) to be chamfered. Enter a distance for the chamfer.

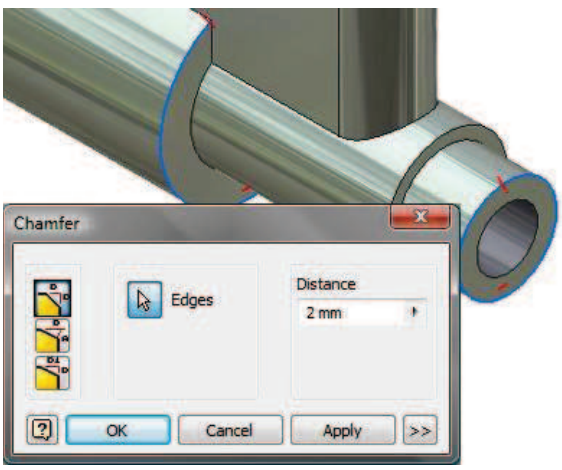

The resulting chamfer is created.

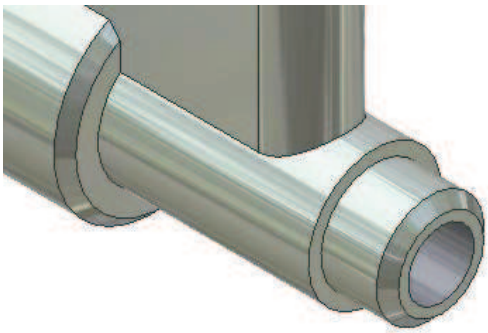

- For the distance and angle method, select the Distance and Angle option. Select the face, and then select the edge(s) to be chamfered. Enter a distance and angle for the chamfer.

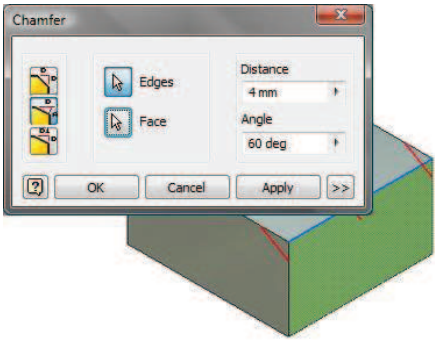

The resulting chamfer is created.

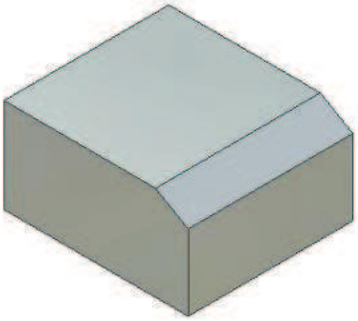

- For the two distances method, select the Two Distances option. Select the edge to be chamfered. Enter distance values in the Distance1 and Distance2 fields.

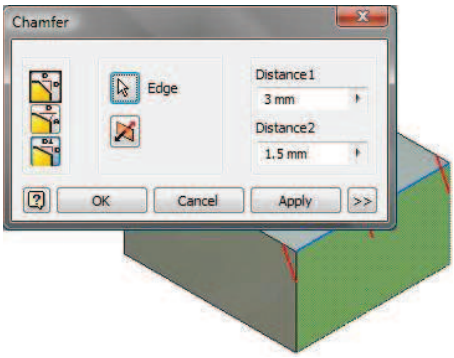

Click OK to create the chamfer.

The resulting chamfer is created.

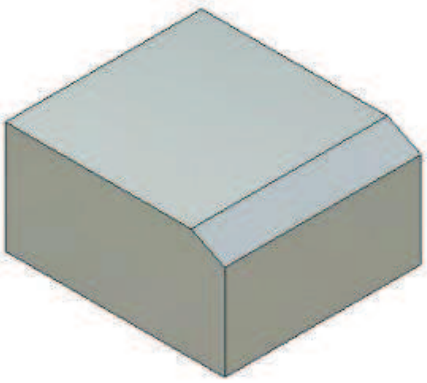

Creating Fillets

You use the Fillet tool to create fillets and rounds on existing 3D geometry. You can create both constant radius and variable radius fillets with the Fillet tool.

The following illustration shows a block before and after adding fillet features.

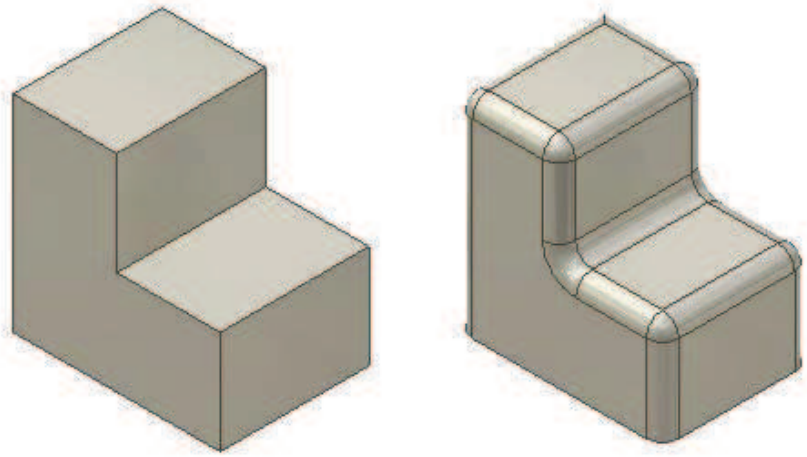

Access

Fillet

Ribbon: **Model tab > Modify panel**

Keyboard Shortcut: **F**

Constant Radius Fillet Options

The Fillet dialog box is displayed when you start the Fillet tool.

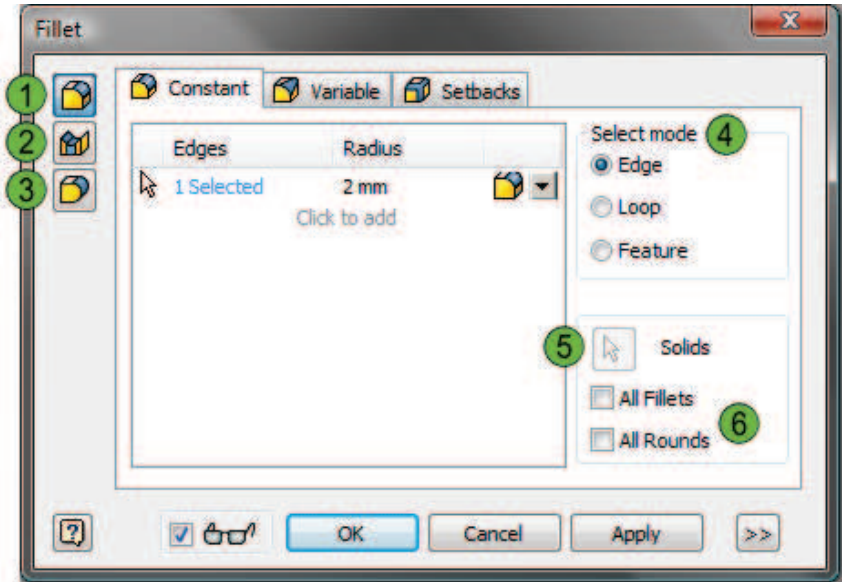

The following creation methods and options are available in the Fillet dialog box.

	Option	Description
1	**Edge**	Adds fillets or rounds to one or more edges of a part. All fillets and rounds created in a single operation become a single feature.
2	**Face**	Adds fillets or rounds between two selected face sets. The face sets do not need to share an edge.
3	**Full Round**	Adds fillets or rounds that are tangent to three adjacent faces. The center face is replaced by the fillet.
4	**Select Mode**	Mode selection enables easy selection of objects to fillet. Select Edge for edge selection priority; Loop for face selection priority; and Feature for feature priority selection.
5	**Solids**	This button is only available when multiple solid bodies exist in the part file. When this is the case, the user can click the solids button to select one or more solid bodies to use with the All Fillets and All Rounds selection options.
6	**Options**	Use the All Fillets or All Rounds check boxes to quickly select all fillet edges or all round edges on the part. Select them both to have all edges on the part selected.

Procedure: Creating Constant Radius Fillets

Follow these steps to create constant radius fillet features.

1. On the ribbon, click the Fillet tool.
2. With the Fillet dialog box displayed, in the graphics window, select the edges to be filleted and specify a radius for each edge set. Create an edge set for each different radius. In the following illustration, two edge sets have been created. The first edge set contains two edges to receive a 2 mm fillet and the second set contains three edges to receive a 1 mm fillet.

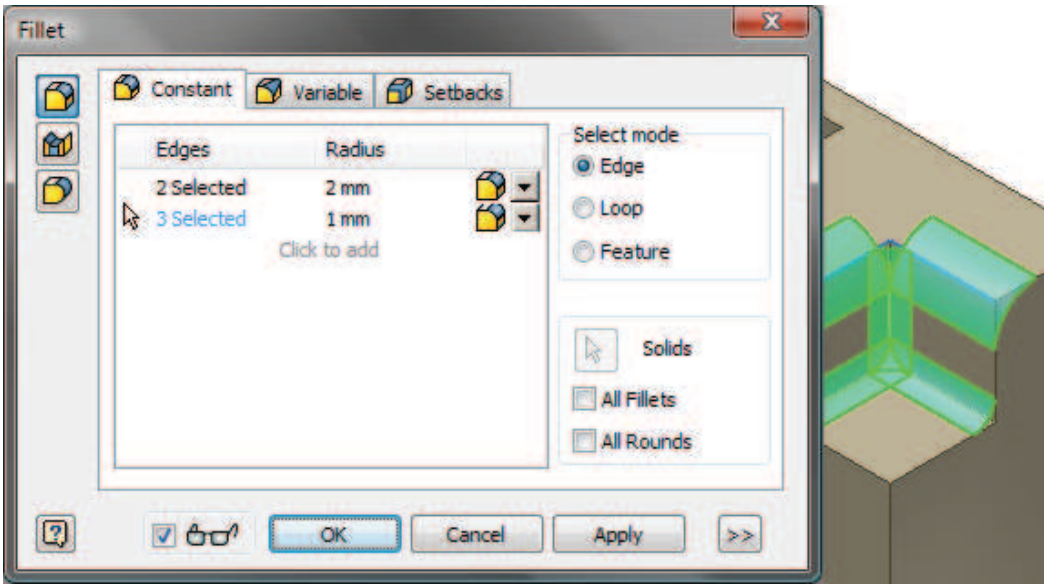

3. Click OK to create the fillet feature. Notice that in the browser only one fillet feature is displayed even though five edges were filleted in this example.

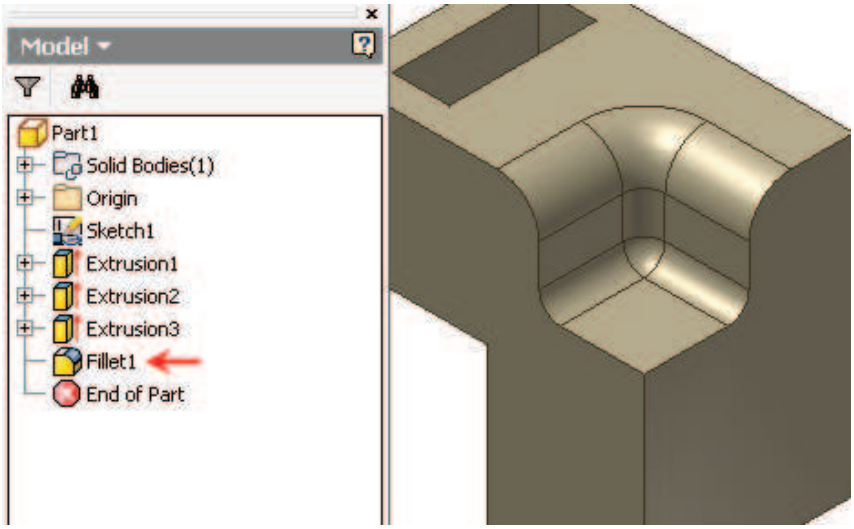

Guidelines for Creating Chamfers and Fillets

Although both fillets and chamfers are relatively simple shapes, they are often a challenge to create with consistency where multiple edges intersect. Following the guidelines presented here can improve your success in creating these features.

Chamfer and Fillet Creation Guidelines

- Avoid creating all of your fillets and chamfers with a single feature. You will have greater success creating and changing features with less edges selected.
- Create these features on parallel edges of a part first. When you create additional features, you can select the resulting face to complete the remaining edges at the same time.
- Remember that using the Two Distances option with the Chamfer tool limits you to creating the feature on one edge at a time.
- Pressing CTRL while clicking removes geometry from the selection.
- Because fillets and chamfers are considered finish features, consider creating them toward the end of the design process after all other features have been defined.
- Avoid including fillets and chamfers in your sketch geometry and instead create them as part features.

Example of Creating Separate Features

In the following example, by creating your side fillets first, you can select the continuously tangent edge as a single selection rather than having to select all the edges individually. Creating your fillet features in this way gives you more flexibility for possible changes to the part later.

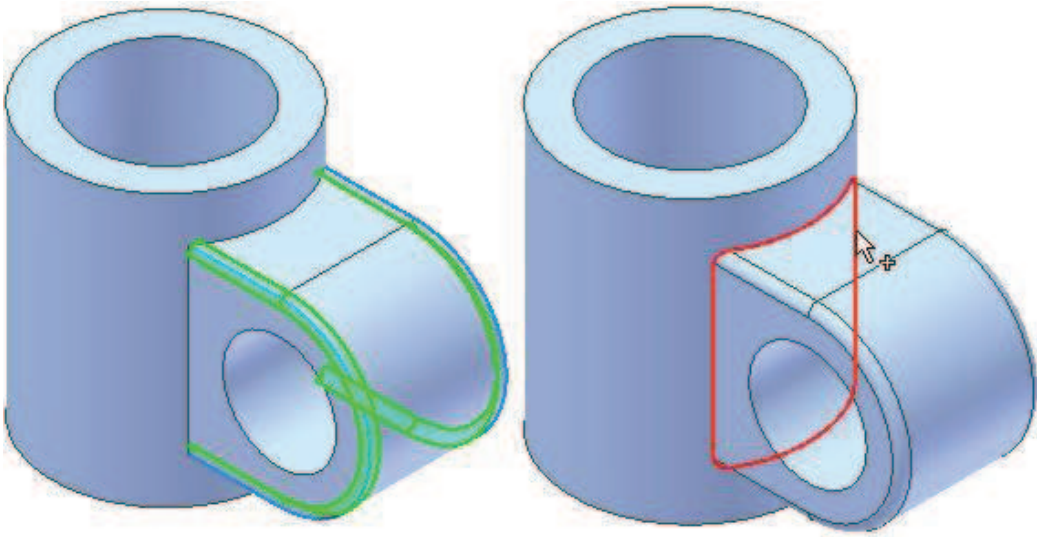

Exercise: Create Chamfers

In this exercise, you add chamfer features to an existing part.

The completed exercise

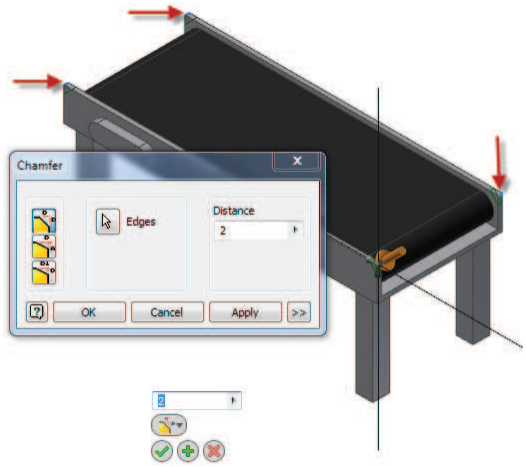

1. Open **Inv_009_Chamfer.ipt.**

2. Create a chamfer on 4 sharp corners as shown in the following image.
   - On the ribbon, click the **Chamfe**r tool.
   - Select the 4 corner edges shown.
   - For Distance, enter **2** in . Click OK.

3. Create a .5 in chamfer on the outside edge of the motor housing.
   - Restart the Chamfer tool.
   - Select the outside edge of the motor housing.
   - For Distance, enter **.5** in. Click **OK**.

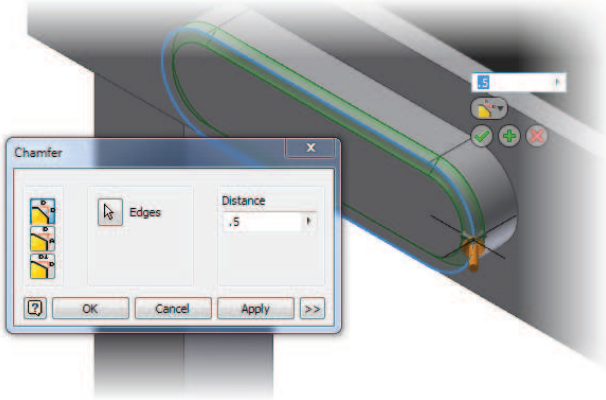

4. Close the file without saving.

Exercise: Create Fillets

In this exercise, you create constant radius fillets on an existing part.

The completed exercise

1. Open **INV_010_Fillet.ipt.**

2. Create fillets on the 4 sharp corners as shown in the following image.

   - On the ribbon, click the **Fillet** tool.
   - Select the 4 corner edges shown.
   - For Distance, enter **4** in . Click **OK**.

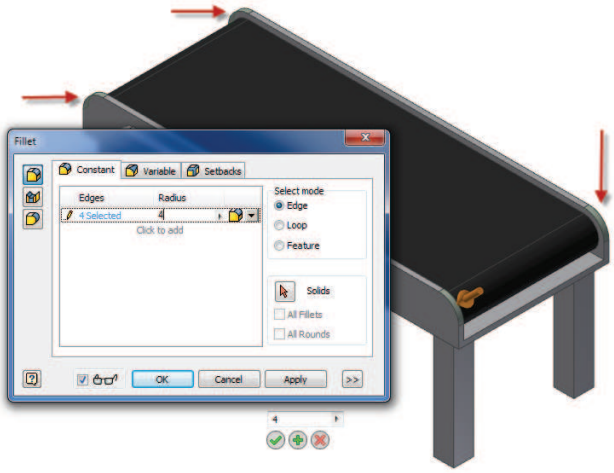

3. Create a **.5** in fillet on the outside edge of the motor housing

   - Restart the **Fillet** tool.
   - Select the outside edge of the motor housing.
   - For the distance, enter **.5** in. Click OK.

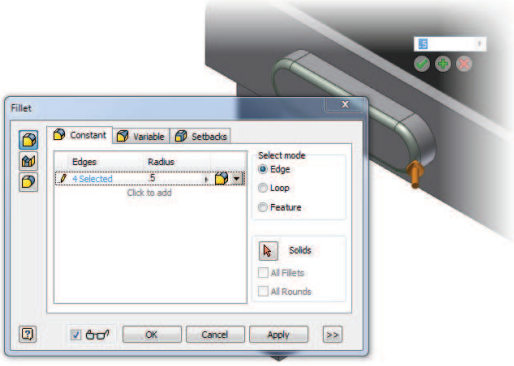

4. Close all files without saving.

Lesson: Creating Holes and Threads

This lesson describes how to use the Hole tool to create parametric hole features and the Thread tool to create threads on existing model features. You use hole features to create parametric holes on parts. Although hole features are considered to be placed features, you can use unconsumed sketch geometry to represent the center point locations for the holes.

The most common method of joining two or more components together is with threaded fasteners. You should master the use of both the hole and thread features to produce the best models possible.

The following illustration shows a part that contains a combination of hole and thread features.

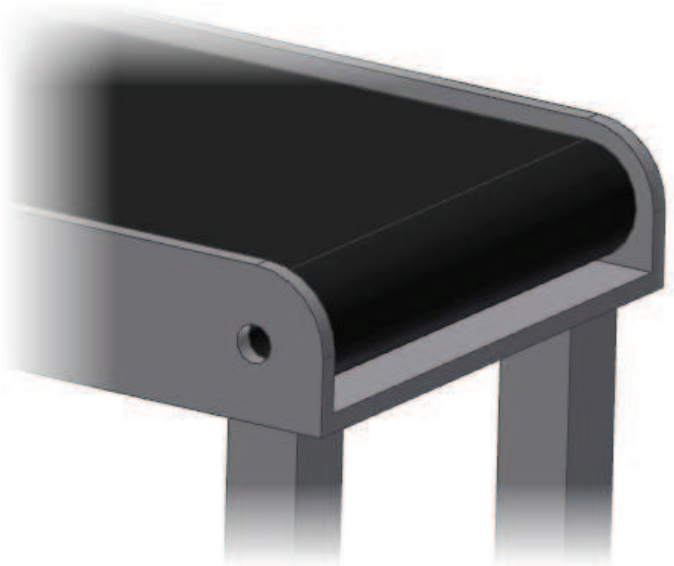

Objectives

After completing this lesson, you will be able to:

- Define a hole feature.
- Use the Hole tool to create holes on your part.
- Use the Thread tool to create external thread features.

About Hole Features

Hole features are parametrically created features that are placed on existing part geometry. You can create hole features with a number of different options, such as counterbore, countersink, flat bottom, spotface, threads, tapered threads, and fastener clearances.

The following illustration shows a part with various types of holes. The enlarged view (1) shows the bitmap thread representation.

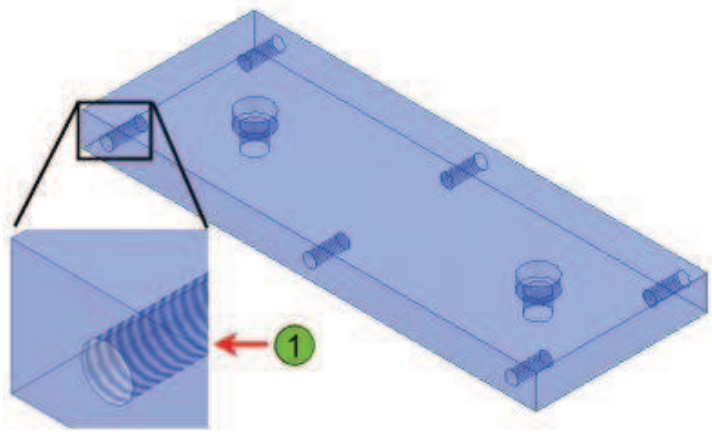

Definition of Parametric Holes

There are many different ways to fasten parts together and most require a hole. Although you can create holes by extruding a circle with a cut operation, the Hole tool provides greater flexibility in the variations and types of holes that you can create, such as counterbore, countersink, and threads. Using the Hole tool, you can create the various hole types in a single dialog box, rather than having to manually edit or create geometry.

A primary benefit of using the Hole tool is the ability to annotate holes in the drawing environment with the Hole Note and Hole Chart tools. A sample of the automatic hole note callout is shown in the following illustration.

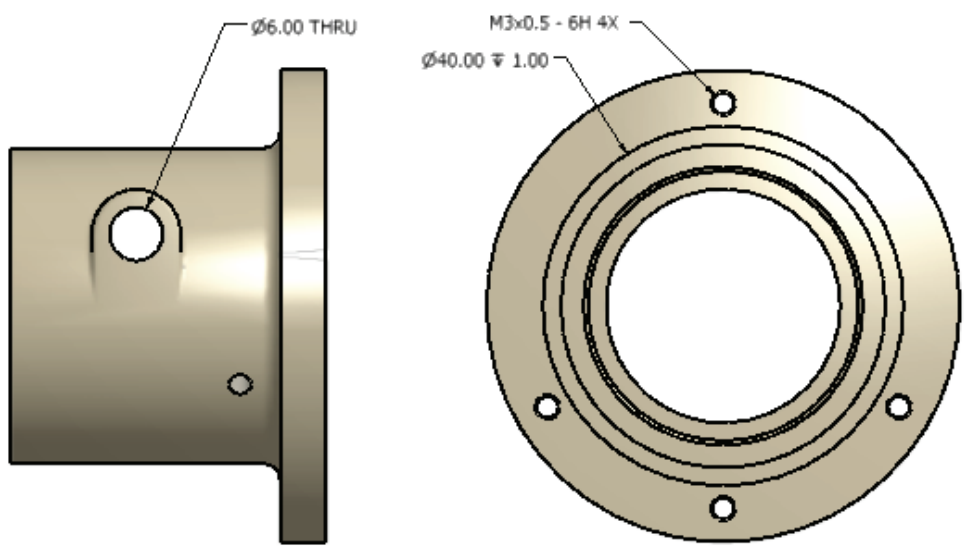

Example of Fastening Parts

Two metal components are often fastened together using a socket head cap screw. The following illustration shows the clearance hole for the screw in one part and the threaded hole in the mating part.

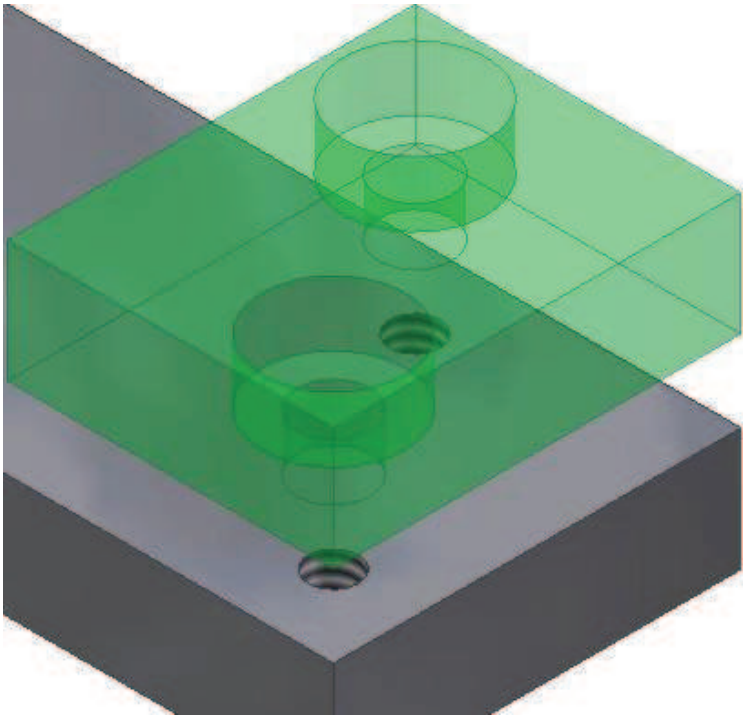

Benefits of the Hole Tool

Benefits of using the Hole tool include the following:

- You use a single tool to create holes with various options.
- You can annotate holes created with the Hole tool in the drawing with the Hole Note and Hole Chart tools.
- You can determine hole size by specifying the fastener thread type or clearance.
- Options such as the counterbore, countersink, and spotface enable you to add features in a single operation.

Creating Holes

When you use the Hole tool, different options are available for defining the location of the hole as well as for the type of hole to be created. You can define hole locations based on sketch geometry or existing planes, points, and edges on the part. You can create standard drilled holes, counterbored holes, and countersunk holes. Additional options are available for the drill point and thread options.

Access

Hole

Ribbon: *Model* tab > Modify panel

Keyboard Shortcut: **H**

Hole Dialog Box

The Hole dialog box is displayed when you start the **Hole** tool.

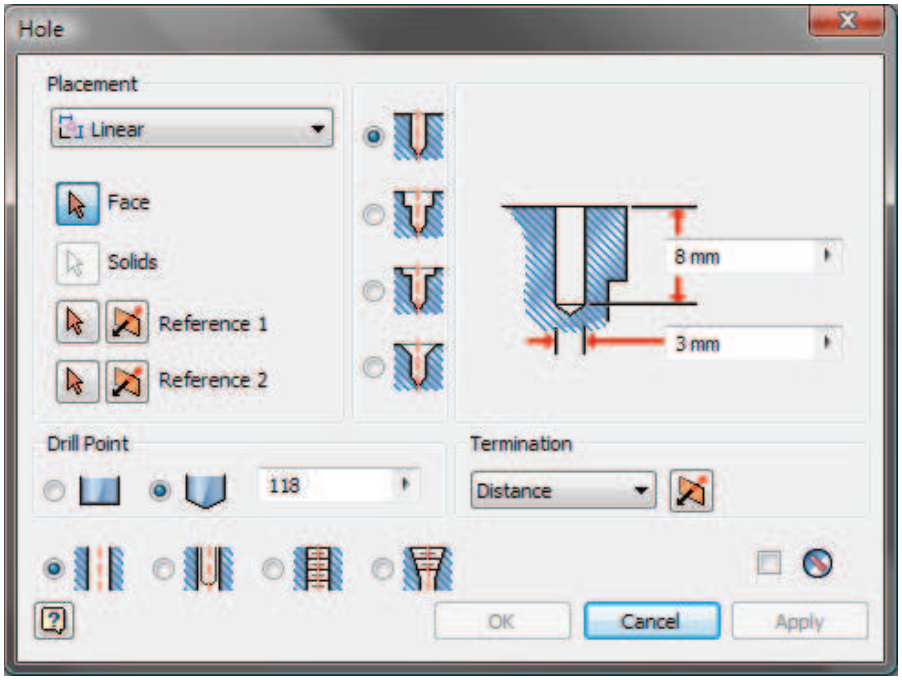

Hole Placement Options

You can use any of the following options in the Hole dialog box for placing a hole feature.

From Sketch

Select this option to create holes based on locations on a sketch. Hole locations can consist of Point/ Hole Center objects, endpoints of lines or curves, or centers of projected circular geometry.

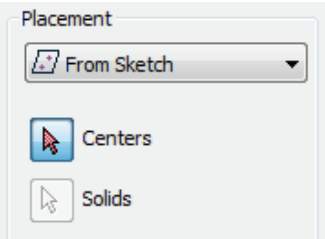

The following option is available when you select From Sketch placement.

Dialog Box Access	Option	Description
	Centers	Select the center points for the holes. Use this option to create a series of identical holes with one feature.
	Solids	This option is only available when the part contains multiple solid bodies. When available, you can use this option to select the solid body that the hole feature will apply to.

Linear

Select this option to position the hole relative to two selected edges.

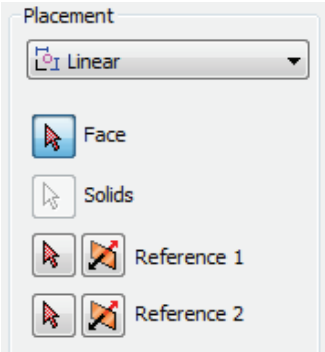

The following options are available when you select Linear placement.

Dialog Box Access	Option	Description
	Face	Select a face on the part to orient the hole.
	Solids	This option is only available when the part contains multiple solid bodies. When available, you can use this option to select the solid body that the hole feature will apply to.
	Reference 1	Select a part edge as the first reference. A dimension is placed from the selected edge to the center of the hole. The dimension can be edited as a standard parametric dimension.
	Reference 2	Select a part edge as the second reference. A dimension is placed from the selected edge to the center of the hole.
	Flip Side	Select this option to position the hole on the opposite side of the selected edge.

Concentric

Select this option to position the hole concentric to another circular part edge.

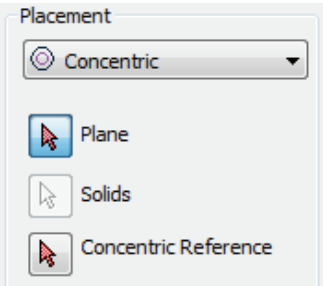

The following options are available when you select Concentric placement.

Dialog Box Access	Option	Description
	Plane	Select a part face to orient the hole.
	Solids	This option is only available when the part contains multiple solid bodies. When available, you can use this option to select the solid body that the hole feature will apply to.
	Concentric Reference	Select a circular edge or face to position the hole concentrically.

On Point

Select this option to position the hole on a work point.

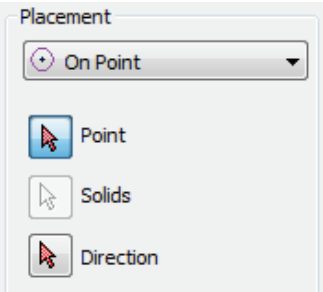

The following options are available when you select On Point placement.

Dialog Box Access	Option	Description
	Point	Select a work point to position the hole.
	Solids	This option is only available when the part contains multiple solid bodies. When available, you can use this option to select the solid body that the hole feature will apply to.
	Direction	Select a plane, face, edge, or work axis to define the direction of the hole. If you select a plane, the hole direction is normal to the face or plane.

Hole Type and Size Options

You can use any of the following options in the Hole dialog box to define the type and size of the hole.

Hole Type

Use the following options to define a standard drilled hole, counterbore hole, spotface, or countersink hole.

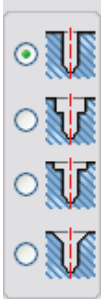

Hole Parameters

Depending on the hole type selected, enter the hole parameters in each available field.

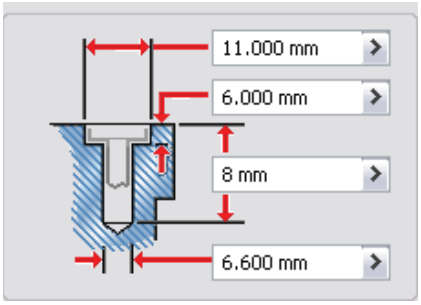

Drill Point

Select flat or angled drill point. If you select angled, either enter an angle for the drill point or accept the default value.

Termination

Select the termination option for the hole from the drop-down list.

Option	Description
Distance	The depth of the hole is based on the distance that you entered in the hole parameters area.
Through All	The hole is created through the entire part, even if the part depth at the location of the hole changes.
To	Select a face or plane to calculate the depth of the hole.

Additional Hole Type Options

Use the additional hole type options to define a simple hole, tapped hole, or clearance hole.

Option	Description
	Creates a simple hole with no thread features.
	Creates a tapped hole based on the thread designation and options entered in the Threads area of the dialog box. The Threads area appears only when this option is selected. 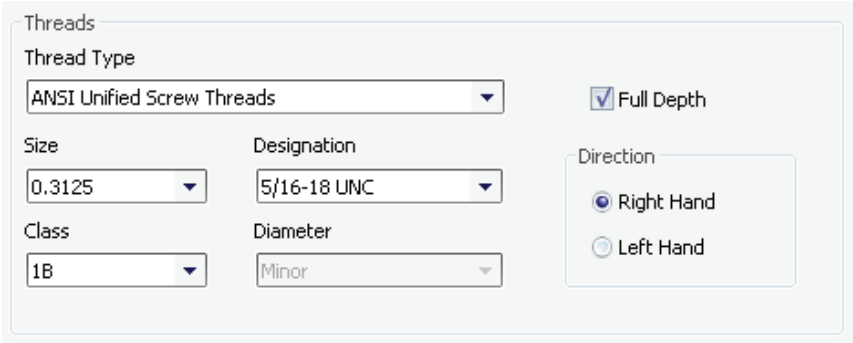

Option	Description
	Creates a clearance hole based on the fastener selected. Available clearance options are Close, Normal, and Loose. The Fastener area appears only when this option is selected. 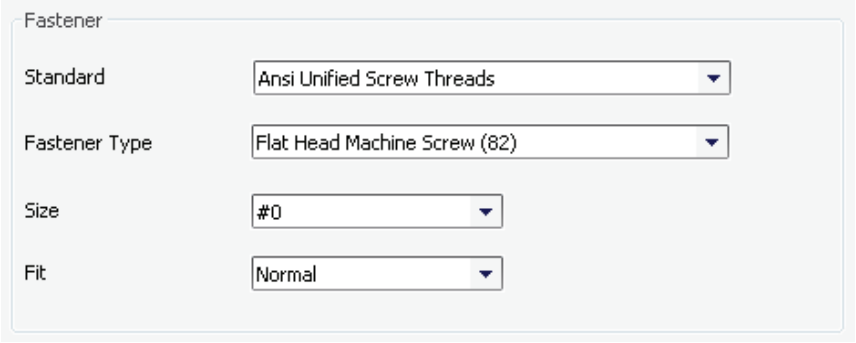
	Creates an NPT tapped or Taper threaded hole based on the thread designation and options entered in the Threads area of the dialog box. 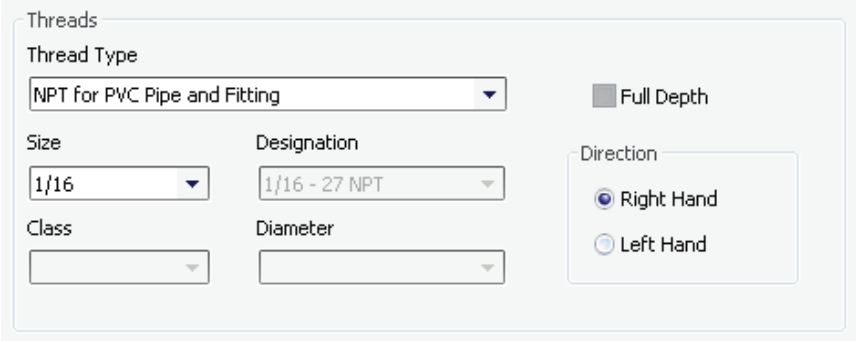

Procedure: Creating Hole Features Using the Linear Option

Follow these steps to create hole features using the Linear placement option of the Hole tool.

1. On the ribbon, click Hole and select Linear from the Placement list.

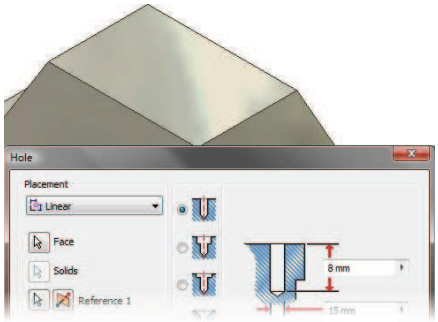

2. Select the face to orient the top of the hole, then select two reference edges to locate the hole. The edges that you select do not need to be on the same plane as the face that you select.

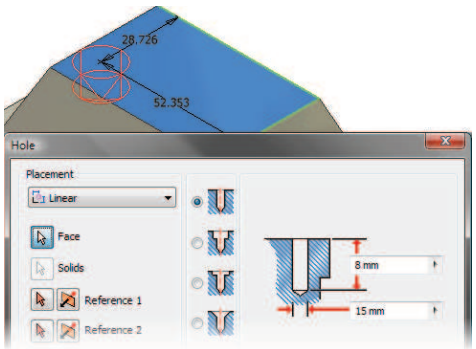

3. Select each dimension and enter its precise value in the Edit Dimension dialog box.

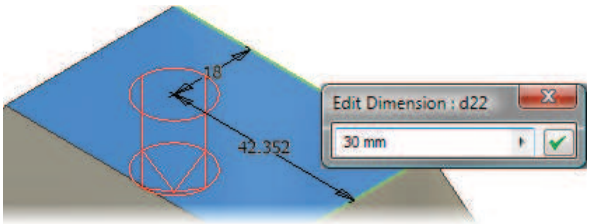

4. Adjust the options in the Hole dialog box. Click **Apply** to create the hole and continue placing other holes.

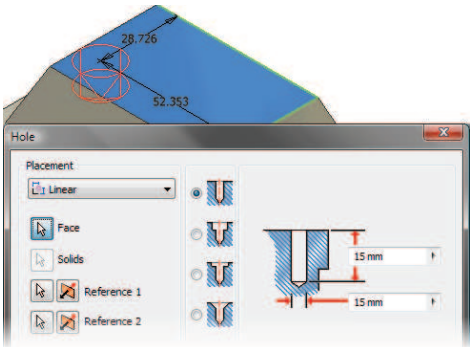

Procedure: Creating Hole Features Using the Concentric Option

Follow these steps to create hole features by using the Concentric placement option of the Hole tool.

1. On the ribbon, click **Hole** and select **Concentric** from the Placement list.

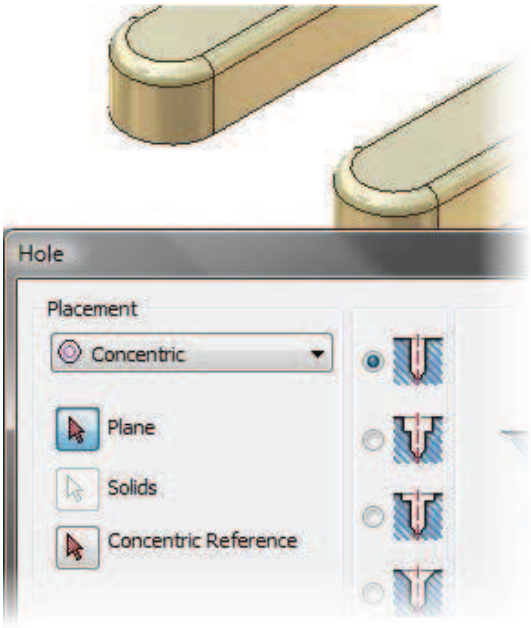

2. Select the plane or face (1) to orient the hole, then select a curved surface (2) as the concentric reference.

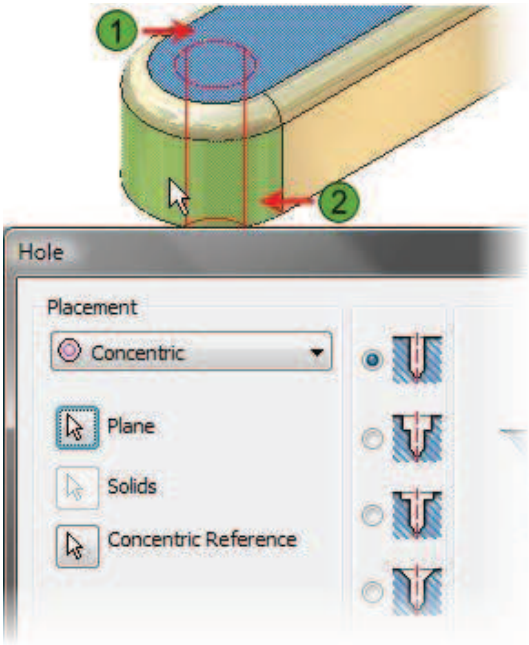

3. Adjust the options in the Hole dialog box. Click **Apply** to create the hole and continue placing other hole features.

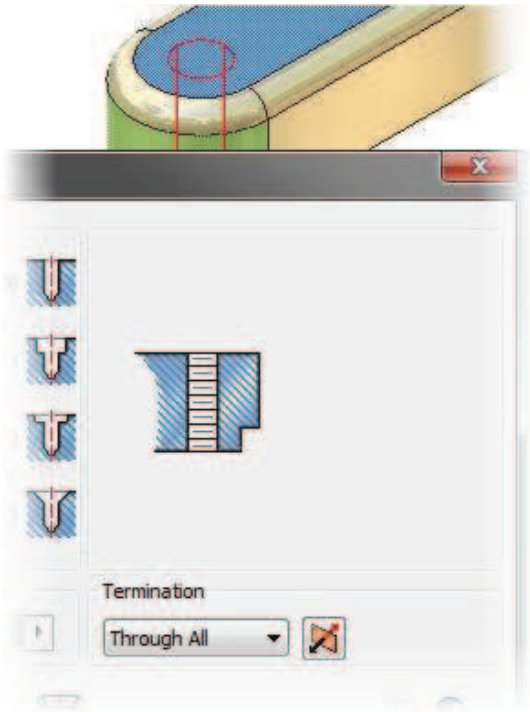

Procedure: Creating Hole Features Using the From Sketch Option

Follow these steps to create and edit holes using sketch geometry for the hole locations.

1. Create a new sketch that contains the center point location for the hole features.

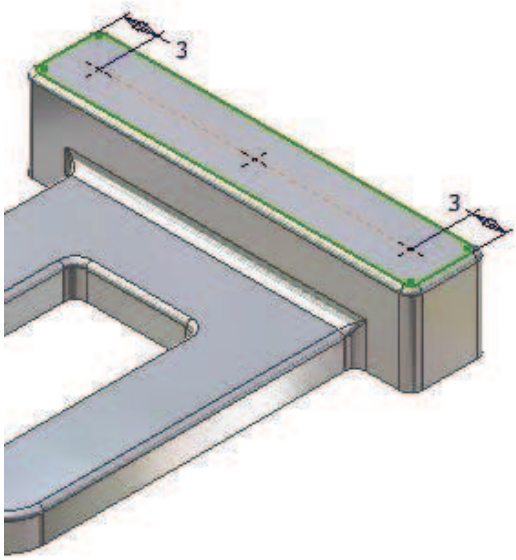

2. On the ribbon, click **Finish Sketch** to exit the sketch.

4. On the ribbon, click **Hole** and select the **From Sketch** placement option. If you use the **Point/Hole Center** sketch object, the hole centers are automatically selected. Adjust the options in the dialog box depending on the type of hole you need to create. Click **OK** to create the hole.

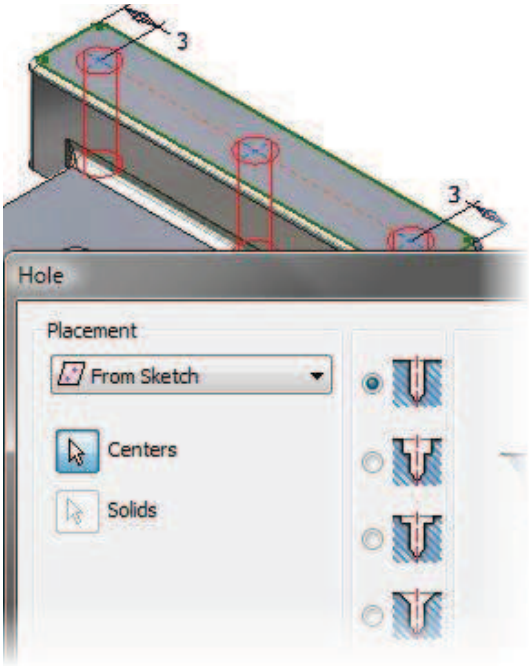

Procedure: Creating Hole Features Using the On Point Option

Follow these steps to create hole features using the On Point placement option of the **Hole** tool.

1. Create a work point (1) at the location of the hole.

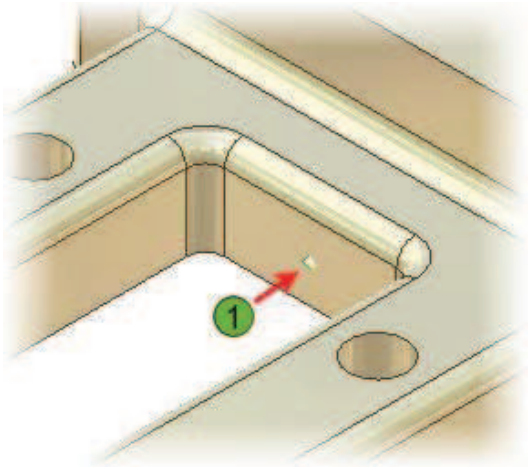

2. On the ribbon, click **Hole**. Select **On Point** from the Placement list and then select the work point.

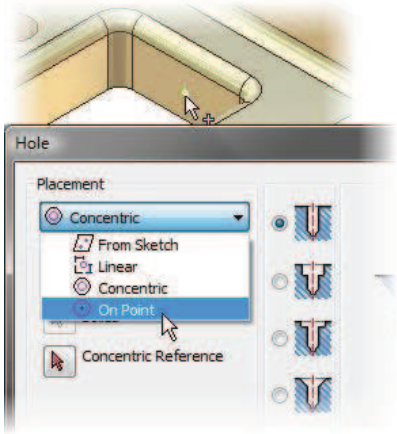

2. Select a face, edge, or axis to define the direction of the hole. If you select a face or plane, the direction is normal to the face or plane.

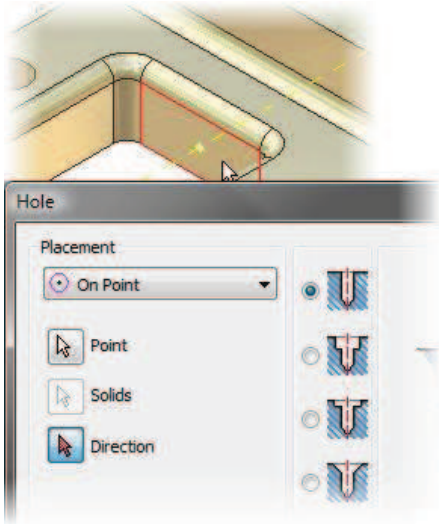

3. Adjust the options in the Hole dialog box. Click **Apply** to create the hole and continue placing other holes, or click OK to create the hole and end the process.

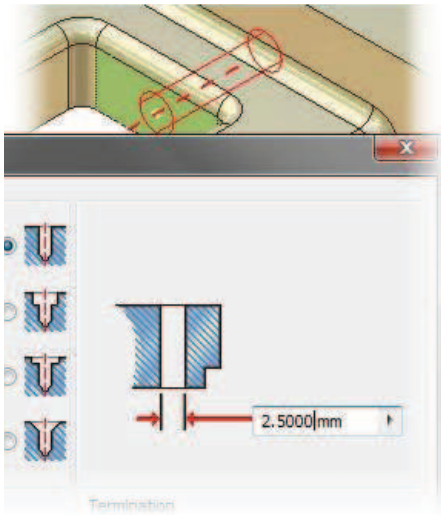

Exercise: Create Holes and Threads

In this exercise, you use the Hole tool with multiple placement options to create tapped, countersink, counterbore, and clearance holes. You also use the Thread tool to create an internal and external thread.

The completed exercise

Create Holes

In this portion of the exercise, you use the Hole tool To create simple holes on the conveyor asset model.

1. Open **INV_011_Holes.ipt**.

2. Create a Concentric Hole thru the conveyor end.
   - On the ribbon, click the **Hole** tool.
   - In the Hole dialog box, select **Concentric** from the Placement list.
   - Click **Face**.

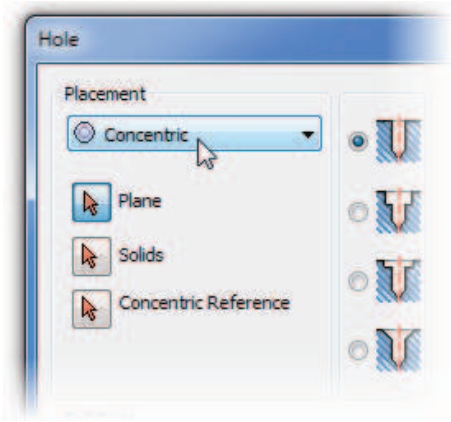

3. Select the outside face of the channel near the right end of the conveyor.

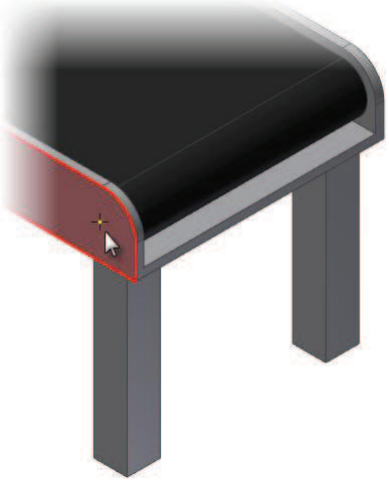

4. Select the circular edge of the channel as a concentric reference.

5. Select the settings for the hole feature:
   - Enter a diameter value of **2** in (1).
   - Set the termination (2) to **Through All**.
   - To include the Belt body in the hole feature, click the **Solids** selector (3) and click the Belt body.
   - Click **OK**.

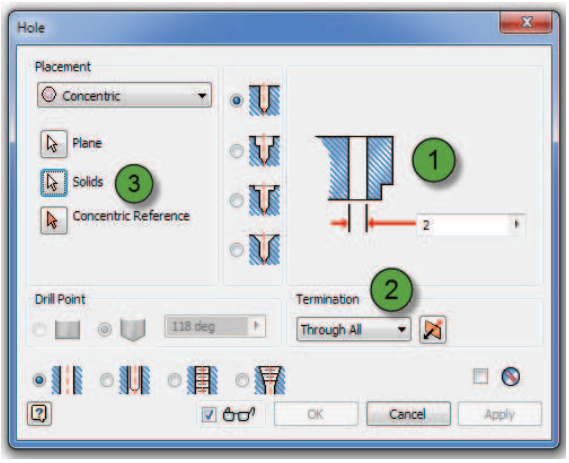

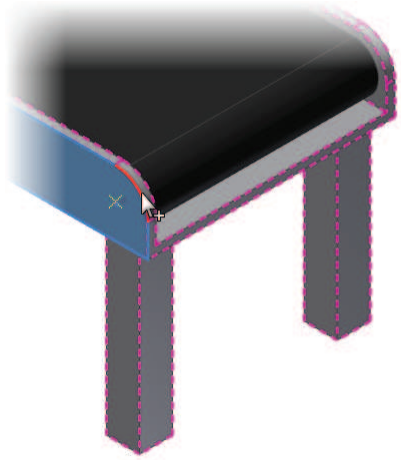

6. Repeat the process to create the concentric hole at the opposite end of the conveyor.

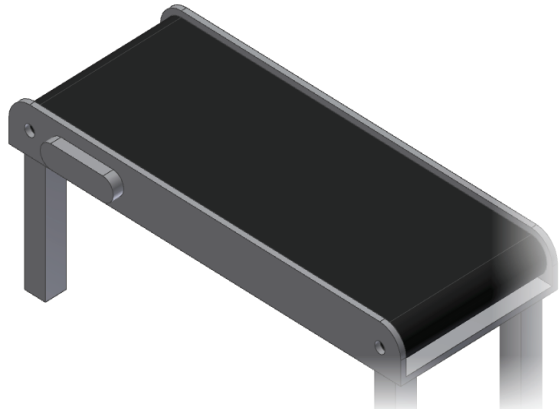

Lesson: Patterning and Mirroring Features

This lesson describes how to mirror features, and how to reuse existing features in rectangular and circular patterns. Mirroring and patterning can save you time in creating the geometry, as well as in editing the features when the design changes.

When you create patterns or mirror existing geometry, you reduce the need to manually draw and edit these duplicate features.

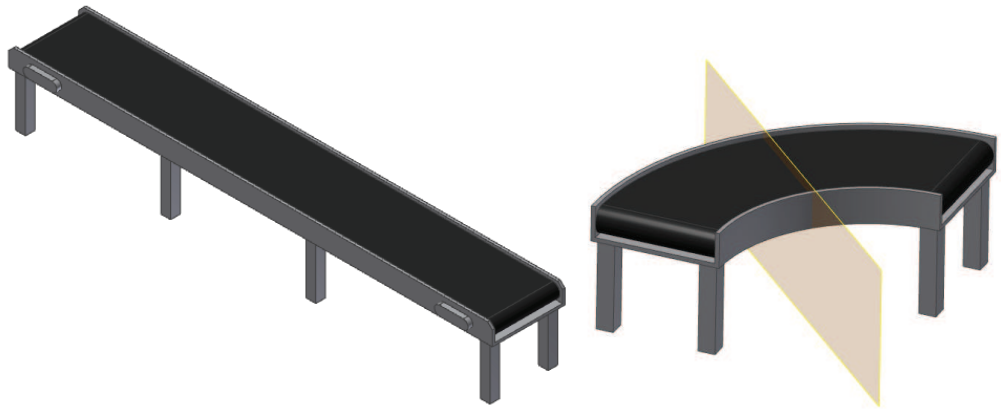

Objectives

After completing this lesson, you will be able to:

- Identify situations in which you should pattern or mirror part features instead of creating new ones.
- Use the Rectangular Pattern tool to create rectangular patterns.
- Use the Circular Pattern tool to create circular patterns.
- Use the Mirror tool to create symmetric features.

About Feature Reuse

Many designs require patterns of features or geometry that consist of features that are symmetric about a given plane. Instead of creating these features independently, you can use the Pattern and Mirror tools to populate your parts with existing features.

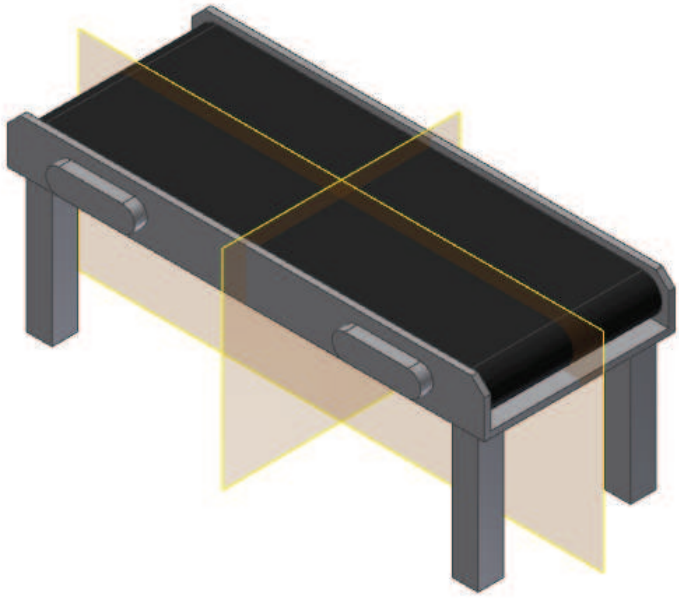

Definition of Patterns

You use patterns to duplicate existing geometry according to parameters that you specify. When you create patterns, occurrences of the original features are created. You can create these occurrences in a circular or a rectangular pattern. When you create these patterns, the occurrences are associative to the original feature, so any changes in the original feature are automatically reflected in the pattern occurrences.

Definition of Mirroring Part Features

Parts often include features that can be considered symmetric about a plane of symmetry to other features on the part. You can use the Mirror tool to mirror this geometry.

In the following illustration, Rectangular (1) and Circular (2) patterns have been created based on individual features.

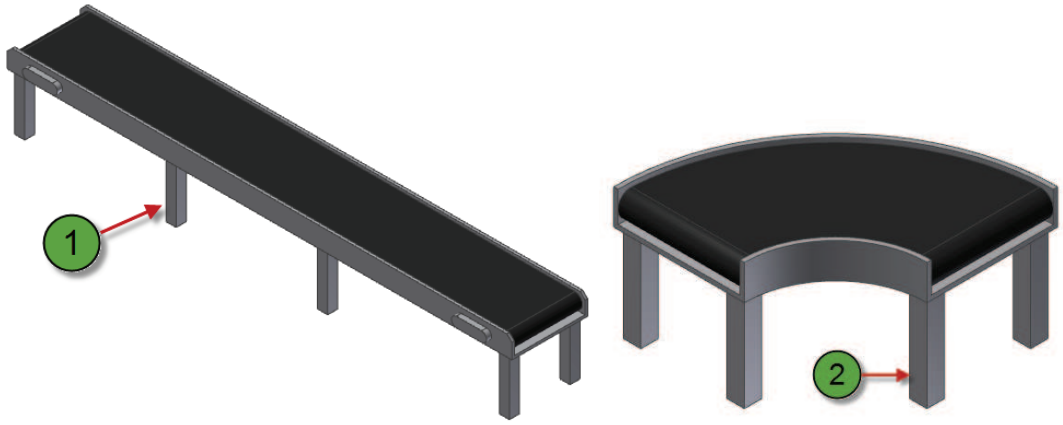

Features That Can Be Reused

The following features can be patterned or mirrored:

- Most sketched and placed features
- Entire solids
- Work features

Benefits of Reusing Features

Benefits associated with patterning and mirroring features include the following:

- You need to create only one of the patterned or symmetric features.
- Changes that you make to the original feature are automatically applied to the patterned or mirrored features.

Appearance of Rectangular and Circular Patterns in the Browser

The way that patterns are displayed in the browser is different from the way that other features are displayed. When you expand a rectangular or circular pattern, the difference is immediately apparent. Any sketches used as a path, along with a folder containing the features used in the pattern, are displayed under the pattern feature. Beneath that is an Occurrence item for each occurrence in the pattern. The first Occurrence item represents the initial feature used in the pattern, followed by an Occurrence item for each occurrence created.

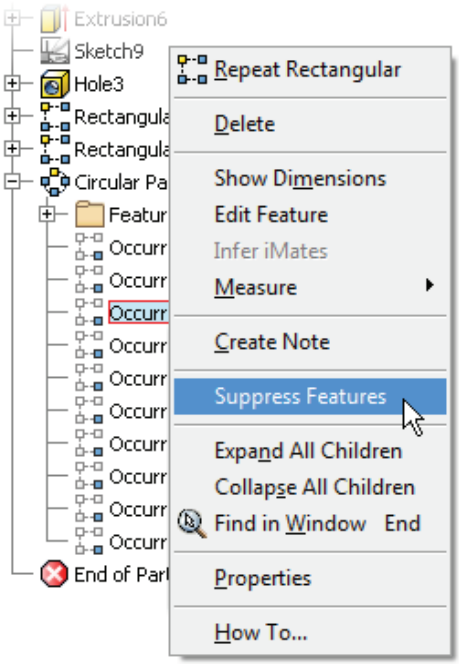

Right-click an occurrence and click Suppress on the shortcut menu to suppress the selected occurrence. This option is not available on the first occurrence.

Example of Mirrored Features

In the following illustration, the part consists of several features that are symmetric about a plane of symmetry. The symmetry planes are identified, along with the features that have been mirrored about them.

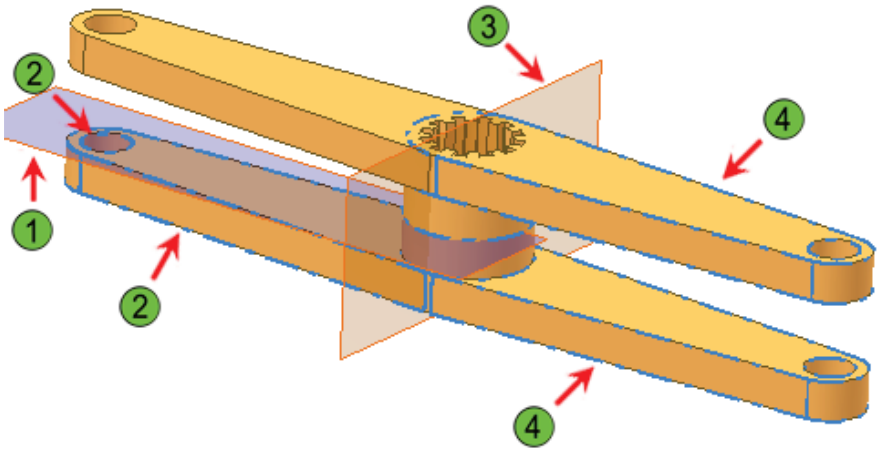

1. Symmetry Plane A
2. Features mirrored about Plane A
3. Symmetry Plane B
4. Features mirrored about Plane B

Creating Rectangular Patterns

You use the Rectangular Pattern tool to duplicate one or more features in a rectangular pattern. You can pattern a feature along one or two directions and/or paths, with options to control feature spacing.

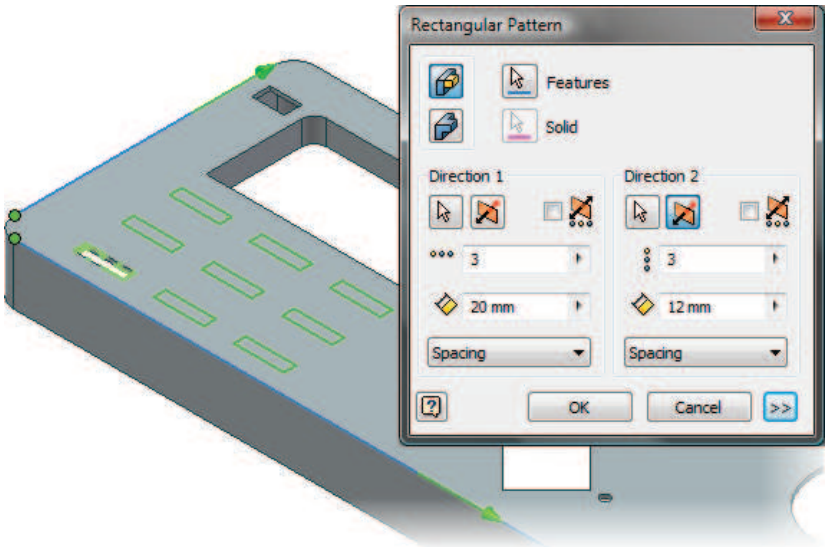

Access

Rectangular Pattern

Ribbon: *Model* tab > Pattern panel

Keyboard Shortcut: **CTRL + SHIFT + R**

Rectangular Pattern Dialog Box

The Rectangular Pattern dialog box is displayed when you start the Rectangular Pattern tool.

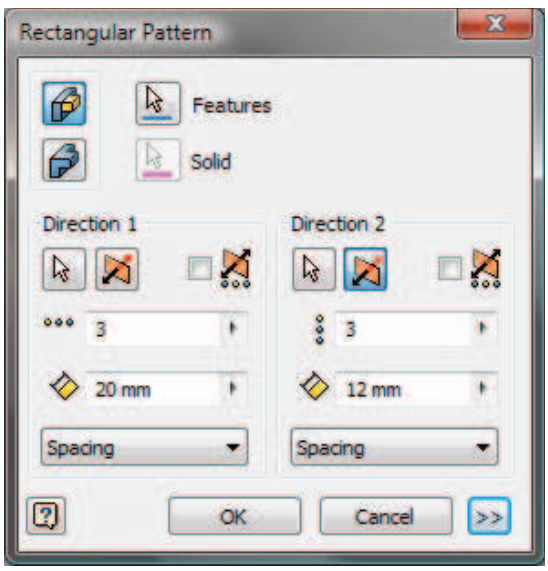

Pattern Type Options

The following pattern types are available in the Rectangular Pattern dialog box.

Dialog Box Access	Option	Description
	Individual Feature	Click this button to pattern individual features.
	Entire Solid	Click this button to pattern the entire solid.

When the **Pattern Individual Features** button is selected, you have the following selection option.

Dialog Box Access	Option	Description
	Features	Select one or more features to be patterned.
	Solid	This button is only available when multiple solid bodies exist. You use this button to determine to which solid body the feature is going to be applied.

When the **Pattern Entire Solid** button is selected, you have the following selection option.

Dialog Box Access	Option	Description
	Include Work/ Surface Features	Select the work features to include in the pattern.
	Solid	This button is only available when multiple solid bodies exist. You use this button to determine to which solid body the feature is going to be applied.

Direction Pattern Options

The following options are available in the Direction 1 and Direction 2 areas of the Rectangular Pattern dialog box.

Dialog Box Access	Option	Description
	Path	Select the path for Direction 1. This can be the edge of a part or a 2D sketch that represents the path for the pattern. Valid selections include 2D and 3D lines, arcs, splines, part edges, axes, and trimmed ellipses. Click the Flip button to flip the path direction.
	Mid Plane	Creates a pattern where the occurrences are distributed on both sides of the original feature.
2	**Count**	Enter the number of occurrences for the pattern. This number includes the original feature.
10 mm	**Length**	Enter a value for the pattern distance. This value represents either the total distance of the pattern or the spacing between the features.
Spacing Spacing Distance Curve Length	**Method**	Specifies the total distance and direction of the pattern, the spacing between occurrences, or if the pattern is equally fitted to the length of the selected curve.

Compute Options

The following options are available in the *Compute* area of the Rectangular Pattern dialog box.

Dialog Box Access	Option	Description
Optimized	**Optimized**	For pattern occurrences of 50 or more, increases pattern performance.
Identical	**Identical**	With this method, each occurrence uses an identical termination method, regardless of where it intersects other features.
Adjust	**Adjust**	Enables each occurrence termination to be calculated. This method requires more processing and can increase computational time on large patterns.

Orientation Pattern Options

The following options are available in the *Orientation* area of the Rectangular Pattern dialog box.

Dialog Box Access	Option	Description
Identical	**Identical**	Occurrence orientation is identical to that of the first feature.
Direction1 Direction2	**Adjust Direction**	Specifies which direction controls the position of patterned features. Rotates each occurrence so that it maintains its orientation to the 2D tangent vector of the path.

Procedure: Creating an Optimized Rectangular Pattern

Follow these steps to create an optimized rectangular pattern.

1. Create a part with one or more features to be patterned.

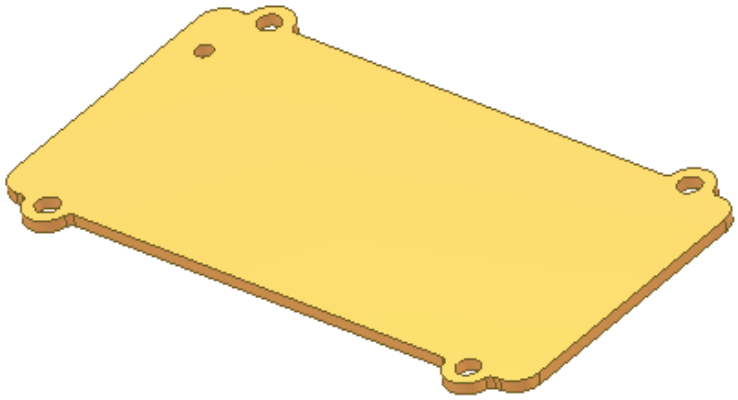

2. *O*n the ribbon, click the **Rectangular Pattern** tool and select the feature to be patterned. Click the **Path** button under *Direction 1* and select a path, part edge, or origin axis for the pattern. Enter the number of occurrences and distance values and adjust the spacing method as necessary. Optionally include information for Direction 2 and then click **OK**.

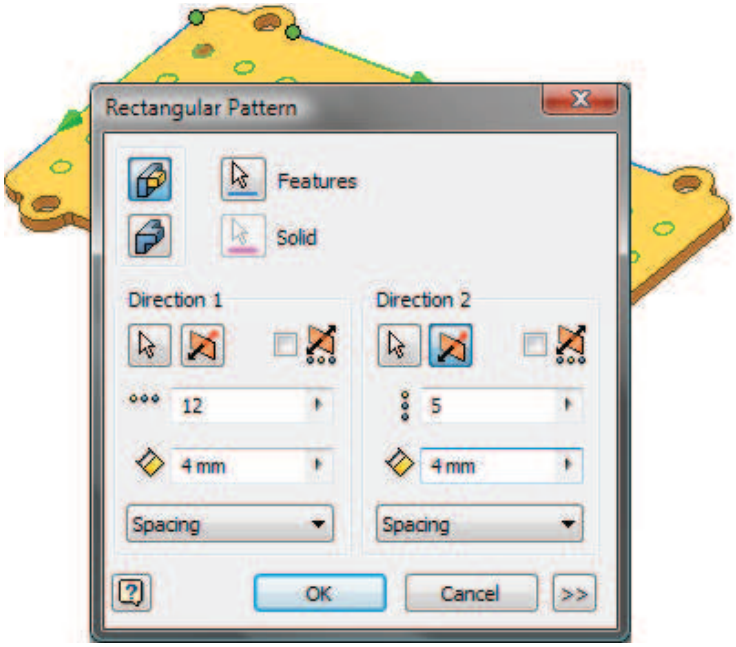

3. As soon as the total number of occurrences is equal to or greater than 50, you are prompted to consider using the Optimized Compute option. Click OK to close the message box.

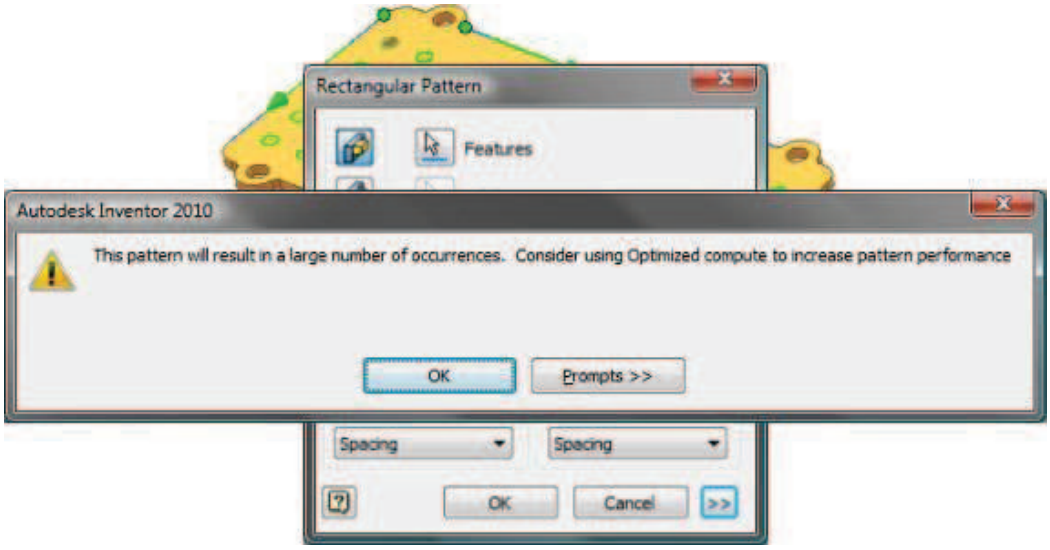

4. In the Rectangular Pattern dialog box, click the **More** button to expand the dialog box, and then select **Optimized**.

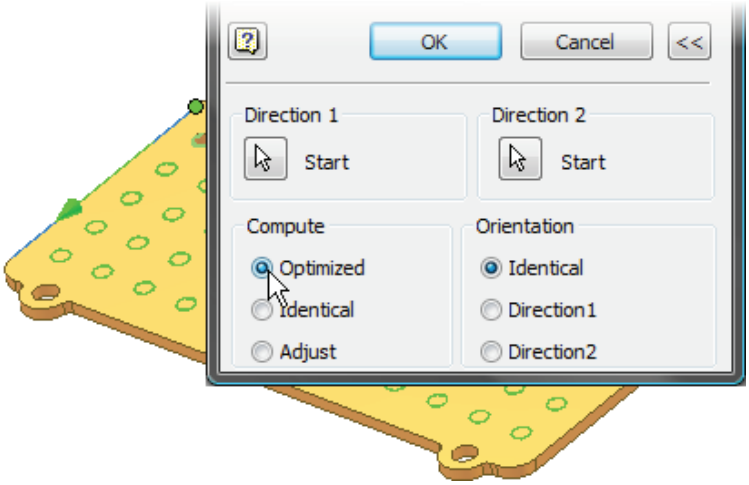

5. Click **OK** to create the optimized pattern.

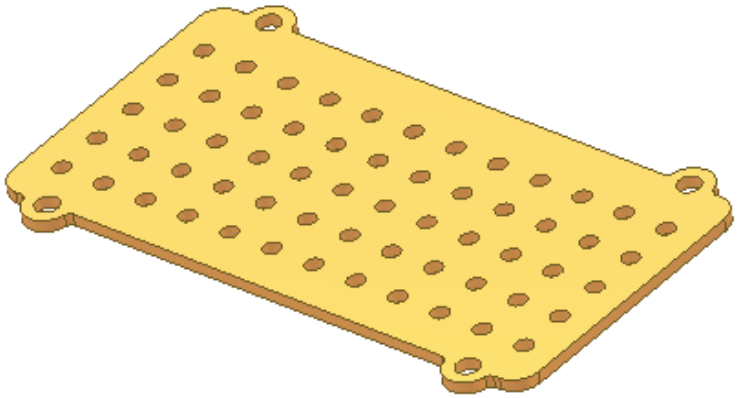

Creating Circular Patterns

You use the Circular Pattern tool to duplicate one or more features in a circular pattern. When you start the Circular Pattern tool, you first choose to pattern individual features or the entire solid. You then select a rotation axis, which serves as the center of the pattern. Next you set the pattern properties, such as number of occurrences and angle. There are also options for controlling the creation method and positioning method.

The following illustration demonstrates a circular hole pattern being created.

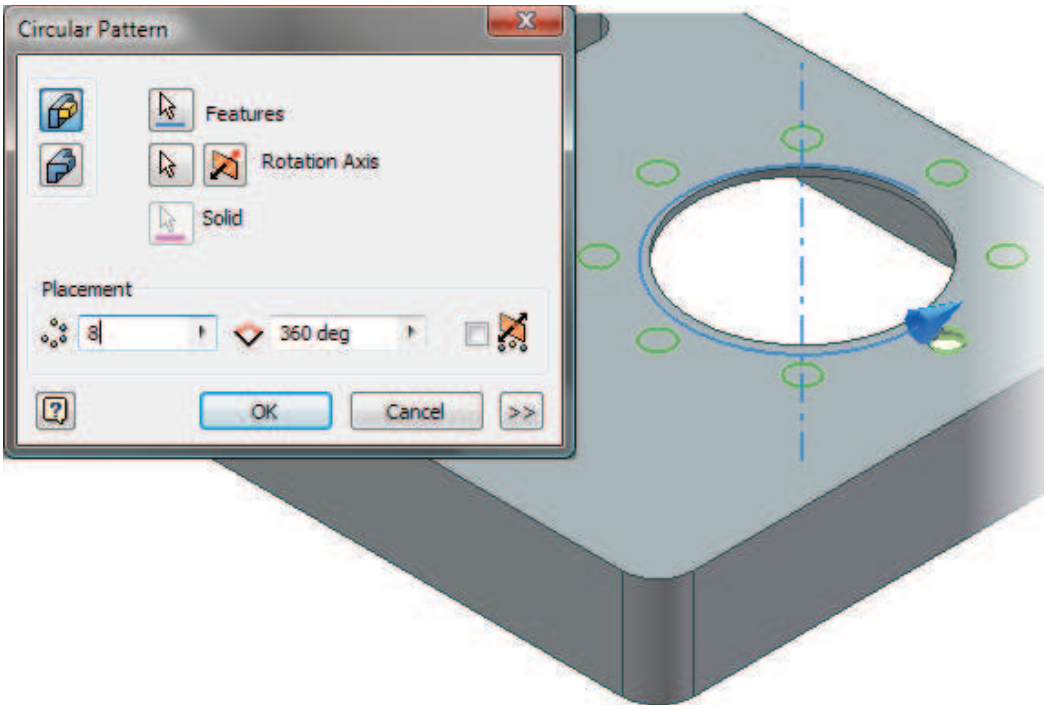

Access

Circular Pattern

Ribbon: *Model* tab > Pattern panel

Keyboard Shortcut: **CTRL + SHIFT + O**

Circular Pattern Dialog Box

The Circular Pattern dialog box is displayed when you start the **Circular Pattern** tool.

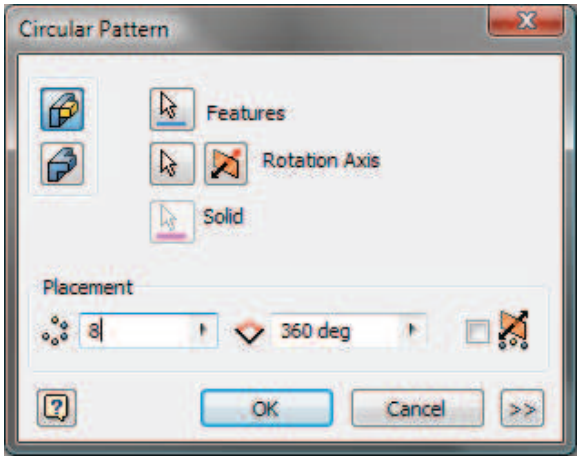

Pattern Type Options

The following pattern types are available in the Circular Pattern dialog box:

Dialog Box Access	Option	Description
	Individual Feature	Click this button to pattern individual features.
	Entire Solid	Click this button to pattern the entire solid.

Feature-Axis Selection

When the Pattern Individual Features button is selected, you have the following selection options.

Dialog Box Access	Option	Description
	Features	Select one or more features to be patterned.
	Rotation Axis	Specifies the axis, or pivot point, about which features are rotated. Click Flip to reverse the direction of the pattern.
	Solid	This button is only available when multiple solid bodies exist. You use this button to determine to which solid body the feature is going to be applied.

When the Pattern **Entire Solid** button is selected, you have the following selection option.

Dialog Box Access	Option	Description
	Include Work/ Surface Features	Select the work features to include in the pattern.
	Solid	This button is only available when multiple solid bodies exist. You use this button to determine to which solid body the feature is going to be applied.

Pattern Placement Options

The following placement options are available in the Circular Pattern dialog box:

Dialog Box Access	Option	Description
8	**Count**	Specify the number of occurrences for the pattern. This number includes the original feature.
360 deg	**Angle**	Specify the angle for the pattern. The result of this angle is based on the positioning method you select.
	Mid Plane	Creates a pattern where the occurrences are distributed on both sides of the original feature.

Creation Method Options

The following options are available in the *Creation Method* area of the Circular Pattern dialog box:

Dialog Box Access	Option	Description
Optimized	**Optimized**	For pattern occurrences of 50 or more, increases pattern performance.
Identical	**Identical**	With this method, each occurrence uses an identical termination method, regardless of where it intersects other features.
Adjust	**Adjust**	Enables each occurrence termination to be calculated. This method requires more processing and can increase computational time on large patterns.

Positioning Method Options

The following options are available in the **Positioning Method** area of the Circular Pattern dialog box.

Dialog Box Access	Option	Description
Incremental	**Incremental**	Sets the angle value to represent the angle between occurrences.
Fitted	**Fitted**	Sets the angle value to represent the total rotational angle of the pattern.

Mirroring Features

When you mirror part features, you must first have the features to be mirrored and a plane to use as the symmetry plane. The symmetry plane can be any of the following:

- An existing face on the part.
- Any one of the origin work planes.
- A new work plane.

With these conditions met, click the **Mirror** tool, select the features to be mirrored, then select the face or work plane to use as the mirror plane. The features are mirrored about the selected plane and displayed in the browser, with the included features and occurrences nested underneath the mirror feature.

The features to be mirrored are highlighted in the browser.

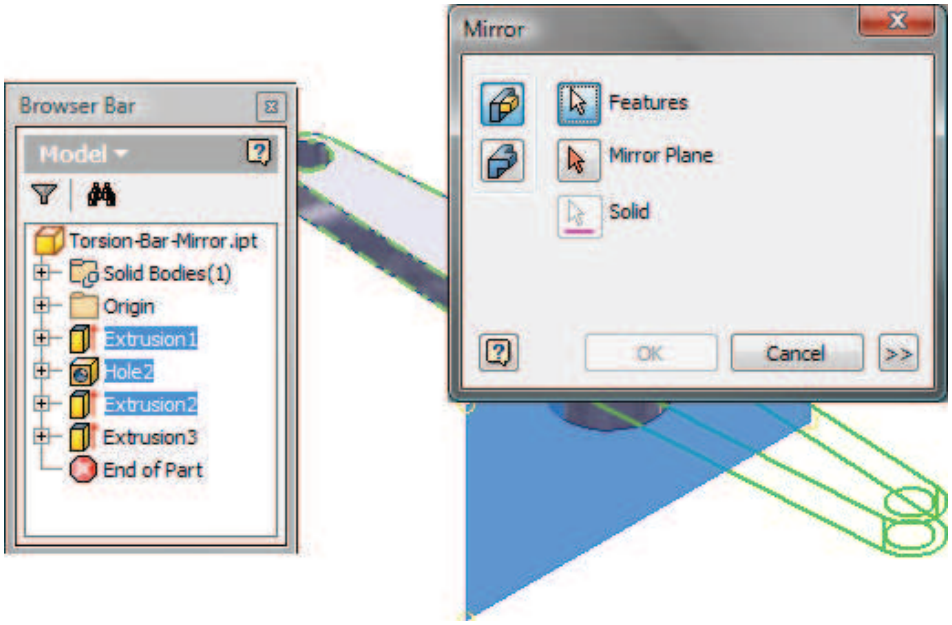

Access

Mirror

Ribbon: *Model* tab > Pattern panel

Keyboard Shortcut: **CTRL + SHIFT + M**

Mirror Dialog Box

The Mirror dialog box is displayed when you start the **Mirror** tool.

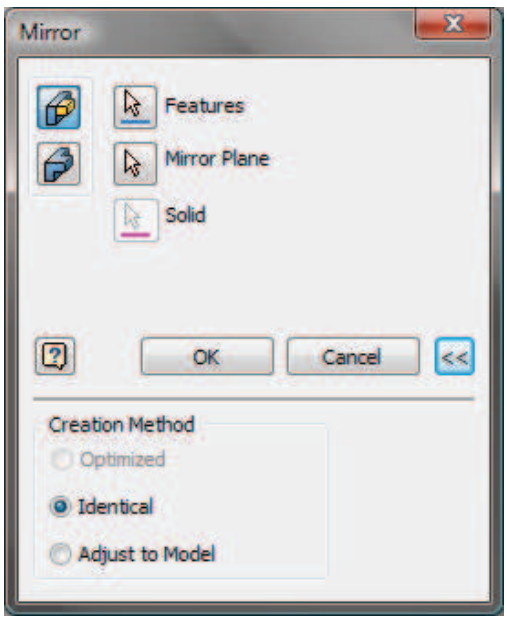

Mirror Type Options

The following mirror types are available in the Mirror dialog box.

Dialog Box Access	Option	Description
	Individual Feature	Click this button to mirror individual features.
	Entire Solid	Click this button to mirror the entire solid.

When the Mirror Individual Features button is selected, you have the following selection options.

Dialog Box Access	Option	Description
	Features	Select one or more features to be patterned.
	Mirror Plane	Select a face or work plane to be used as the plane of symmetry.
	Solid	This button is only available when multiple solid bodies exist. You use this button to determine to which solid body the feature is going to be applied.

When the **Mirror Entire Solid** button is selected, you have the following selection option.

Dialog Box Access	Option	Description
	Solid	This button is only available when multiple solid bodies exist. You use this button to determine to which solid body the feature is going to be applied.
	Include Work/ Surface Features	Select the work features to be included in the mirror.
	Mirror Plane	Select a face or work point to be used as the plane of symmetry
Remove Original	**Remove Original**	Placing a check in the box next to this option will delete the original solid that was originally used to pattern the feature.

Creation Method Options

The following options are available in the *Creation Method* area of the Mirror dialog box.

Dialog Box Access	Option	Description
Optimized	**Optimized**	Optimizes pattern performance.
Identical	**Identical**	The default; creates the mirrored occurrences identical to the original features.
Adjust	**Adjust to Model**	Enables the new mirrored occurrences to adjust to changes in model geometry. For example if you are mirroring a cut feature that extrudes through the part, using this option enables that cut feature to extrude the part on the opposite side, even if the part's thickness changes. **Note:** Use this option only when necessary, because additional processing resources are required to calculate the new occurrences.

Example: Creation Method = Identical

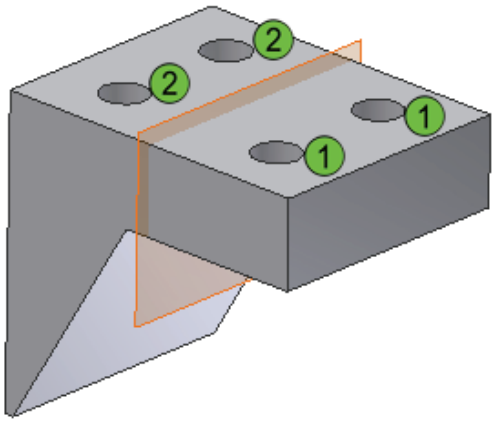

1 Original hole features with through all termination option.

2 Mirrored hole features.

Example: Creation Method = Adjust to Model

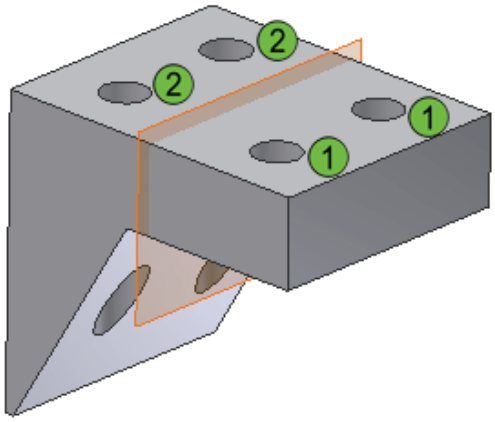

1 Original hole features with through all termination option.

2 Mirrored hole features.

Procedure: Mirroring Part Features

The following steps give an overview of mirroring part features.

1. Open or create a part that contains the geometry intended to be symmetric.

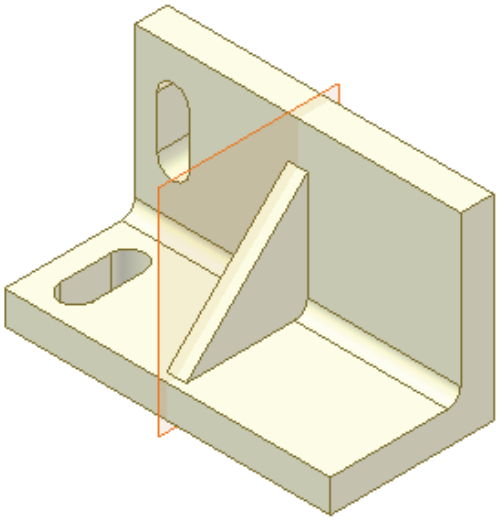

2. On the ribbon, click the **Mirror Feature** tool and select the features to be mirrored.

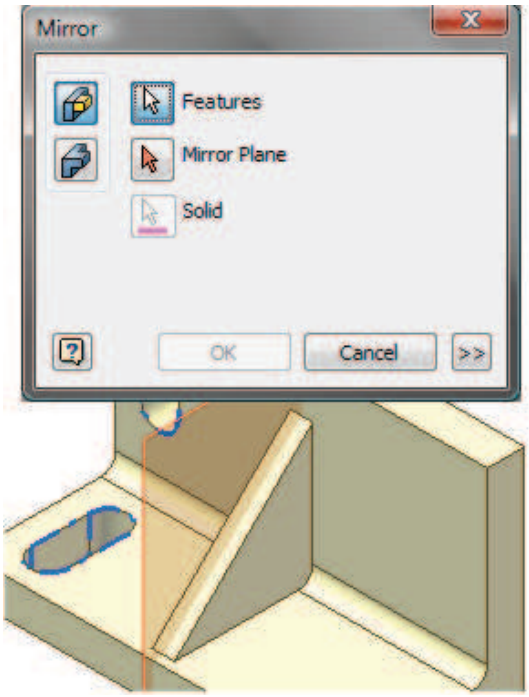

3. In the Mirror Pattern dialog box, click the **Mirror Plane** button and select a plane or face that represents the plane of symmetry for the mirrored features. Click **OK**.

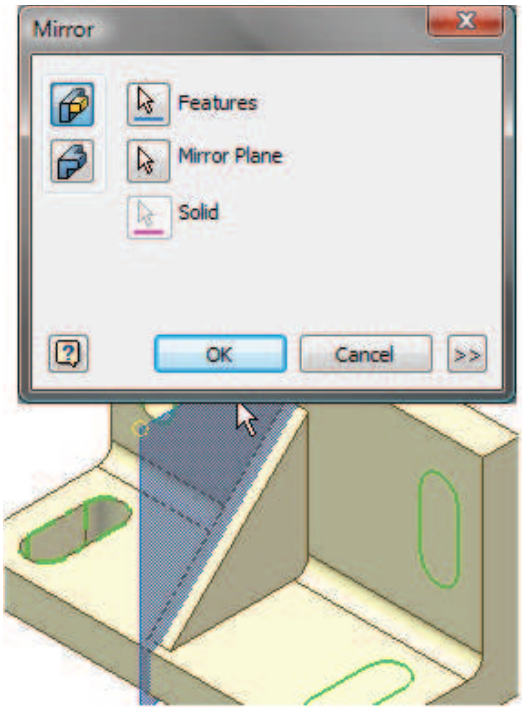

4. The mirrored features are created.

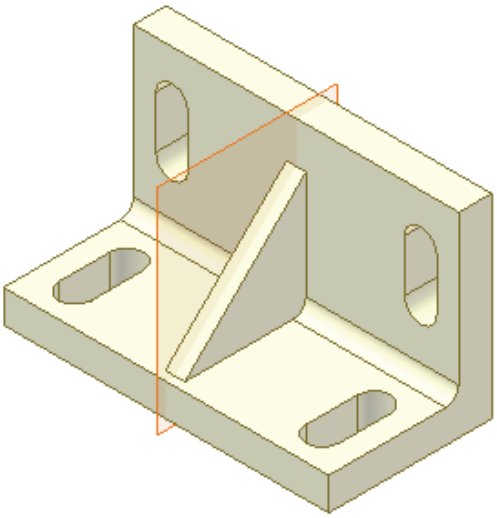

Exercise: Create Mirror and Pattern Features

In this exercise, mirror the motor housing to the opposite side and end of the conveyor. You also pattern the legs and link the number of legs to the overall length of the conveyor.

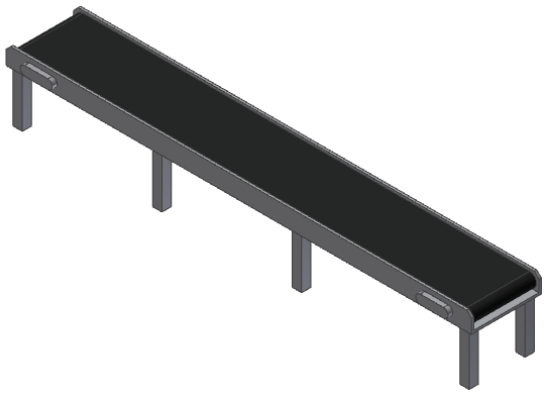

The completed exercise

1. Open **INV_012_Mirror_Pattern**.

2. Turn on the Visibility of the XY and YZ workplanes.

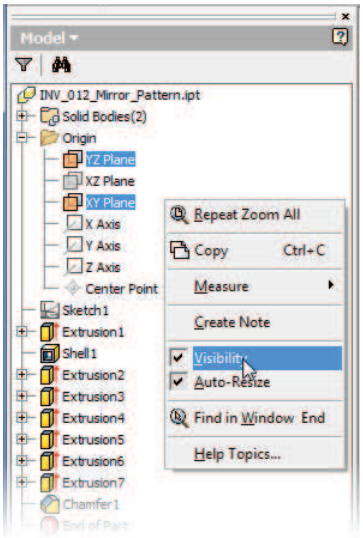

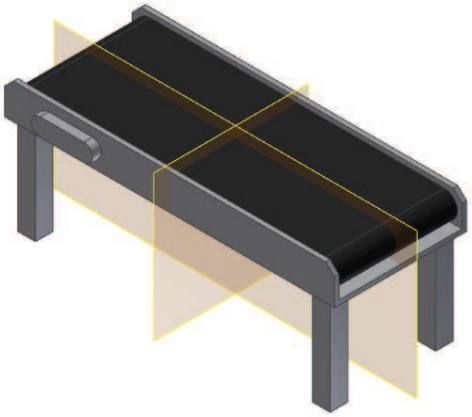

3. Mirror the motor feature to the opposite side of the conveyor.
   - On the Pattern panel start the **Mirror** tool.
   - Select the motor feature (1) and then click the **Mirror Plane** selector (2).
   - Click the **XY Plane** (3) and then click **OK**.

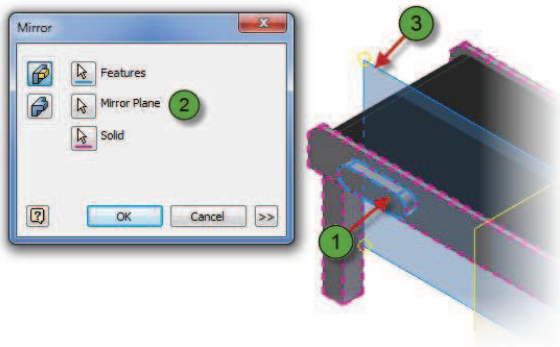

4. Mirror the motor features to the opposite end of the conveyor.
   - On the Pattern panel start the **Mirror** tool.
   - Select the Mirror feature from the browser (1) and then click the **Mirror Plane** selector (2).
   - Click the **YZ Plane** (3) and then click **OK**.
   - Turn off the visibility of the work planes.

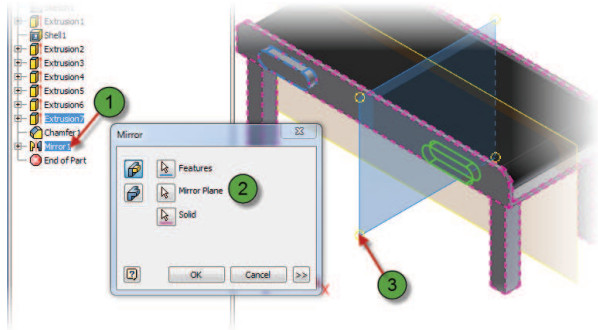

5. Change the value of the Length parameter.
   - On the Quick Access toolbar, click the **Parameters** tool (1).
   - Change the value of the Length parameter (2) to **200** in and then click **Done**.

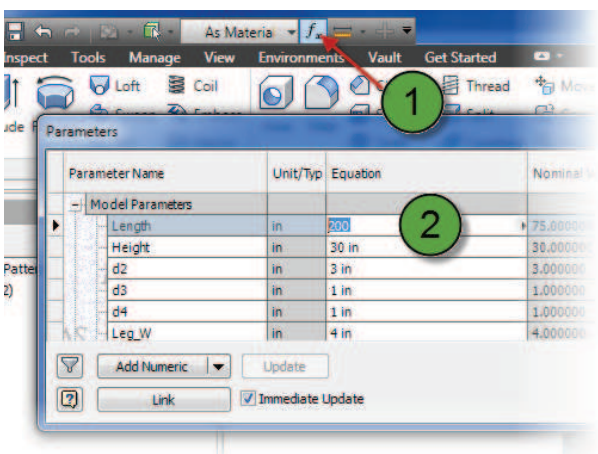

6. Pattern the left set of legs.
   Note: **In this example, the legs were created with separate extrusion features.**
   - On the Pattern Panel, click the **Rectangular** pattern tool.
   - Select **Extrusion 2** and **Extrusion 3** from the Browser.
   - Click the **Direction 1** selector and then select a horizontal edge of the channel.
   - Enter **2** for the number of legs and **60** in for the spacing. Click OK.

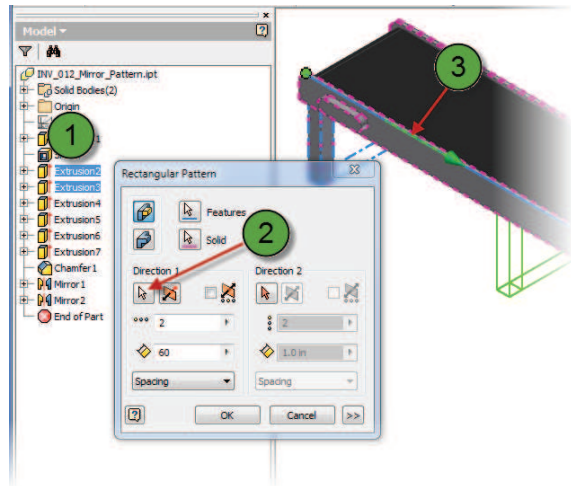

7. Modify the Number of Legs.
   - On the Quick Access toolbar start the **Parameters** tool.
   - Find the parameter that controls the number of legs (d33).
   - Change the value to the following formula.
   - **floor((isolate(Length;in;ul))/60)**
   - Click **Done**.

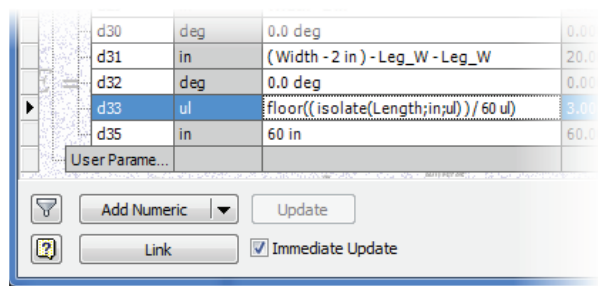

8. Modify the value of the Length parameter and notice the legs update to suit.
   Note: This example assumes that a valid length of 120” between legs is allowed but a leg every 60” is preferred. If you want a leg every 60”, change the **floor** function to **ceil**.

   Optional
   Change the **floor** function in the formula to **ceil** and notice the difference.

   - Close the file without saving.

Exercise: Create a Work Plane and Mirror Feature

In this exercise, you create the legs on the curved conveyor section and then mirror them to the opposite end of the curve conveyor.

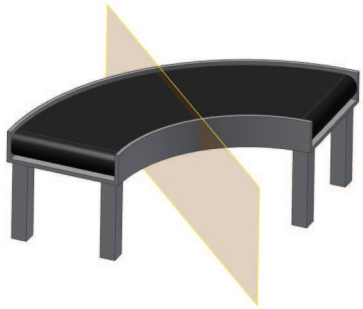

The completed exercise

1. Open **INV_013_Workplane_Mirror.ipt**.

2. Turn on the **Visibility** of Sketch 2 and reorient the model to view Sketch 2.

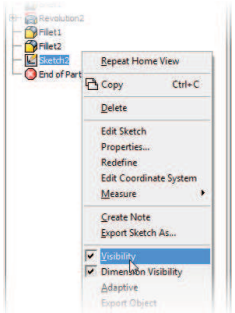

Note: the image below shows the constraints that were applied to the 2 rectangular profiles that will be used to create the legs.

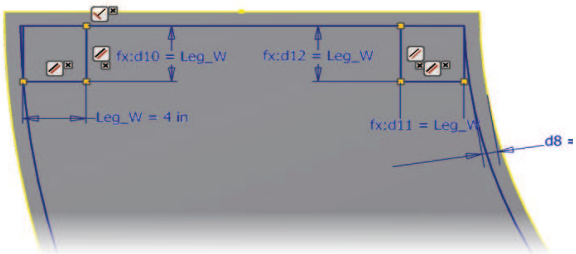

3. Extrude the leg profiles to the XZ plane.
   - On the Pattern panel start the **Mirror** tool.
   - Select the motor feature (1) and then click the **Mirror Plane** selector (2).
   - Click the **XY Plane** (3) and then click **OK**.

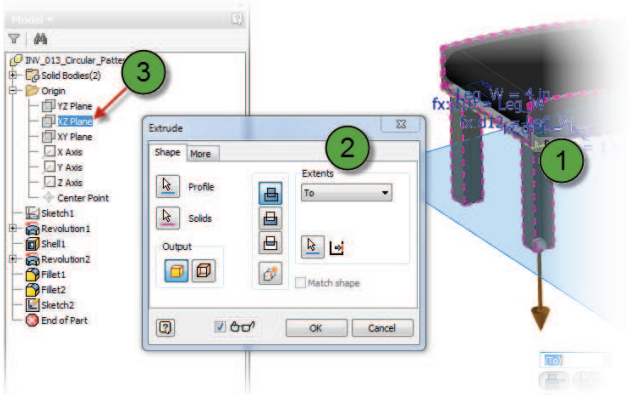

4. Create a Work Axis at the center of the conveyor arc.
   - On the Work Features panel, start the **Work Axis** tool.
   - Select the inside curved face of the conveyor.
   - Click the **Axis selector**.
   - Select the inside curved edge of the conveyor channel.

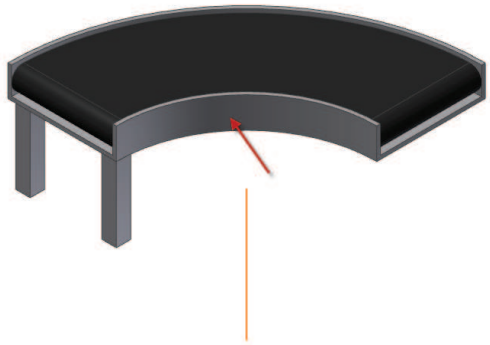

5. Create a work plane with that bisects the conveyor.
   - On the Work Features panel, start the **Work Plane** tool
   - Select the Axis created in the previous step (1).
   - Select the left end face of the conveyor (2).
   - Enter **Angle/2** in the heads-up display.
   - Click the green checkmark on the heads up display.

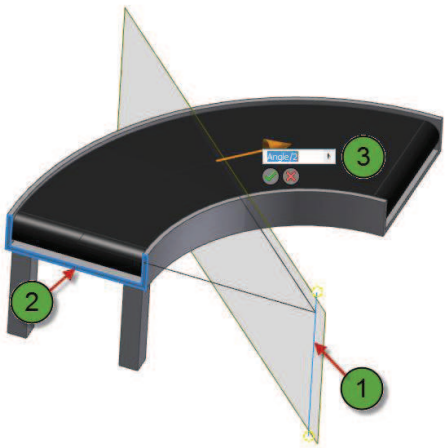

6. Mirror the leg feature to the opposite end of the conveyor.
   - On the Pattern Panel, start the **Mirror** tool.
   - Select the leg extrusion feature.
   - Click the **Mirror Plane** selector and then select the work plane created in the previous step.
   - Click **Ok**.

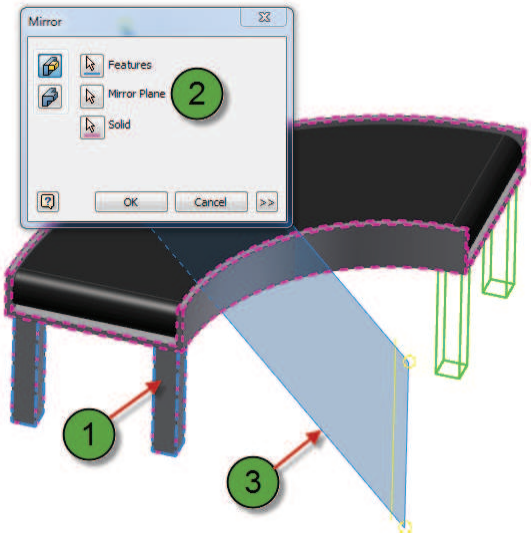

7. Open the **Parameters** tool and modify the Angle parameter.
   Note: Use values between 90 and 20 degrees. Notice how the second set of legs are tied to the angle parameter.
   - Close the file without saving.

Chapter Summary

This chapter enhanced your basic part modeling skills by providing additional tools and recommended workflows for detailed shape design. Understanding how to create chamfers and fillets, place hole and thread features, pattern and mirror features, and create thin-walled parts greatly extends your 3D part modeling capabilities to cover most part design requirements.

Having completed this chapter, you can:

- Create both chamfers and fillets on a part.
- Use the Hole and Thread tools to place hole and thread features on your part model.
- Create rectangular and circular patterns and mirror existing features.
- Create thin-walled parts using the Shell tool.

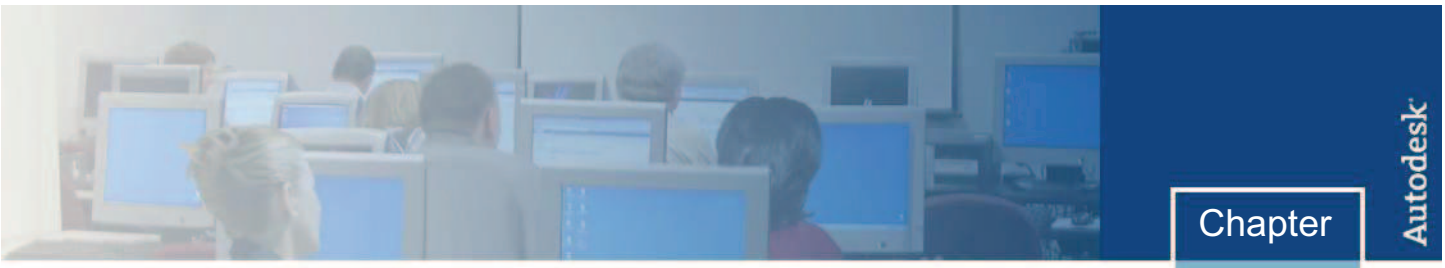

Chapter

9

Autodesk Factory Design Utilities Creating Layouts and Placing Assets

Autodesk Factory Design Utilities are integrated with the standard Inventor environment. This means that the interface you will be working with is the same as the Inventor interface. Some additional tools have been added to incorporate Factory Layout functionality. The Autodesk® Factory Design Utilities gives Inventor users a factory – specific work environment that helps factory layout designers spend more time innovating rather than drafting. This chapter introduces the tools and interface options you will use as you start laying out your initial factory design.

Objectives

After completing this chapter, you will be able to:

- Review the Factory Specific Ribbons
- Create a New Factory Layout.
- Add a DWG Overlay to the Factory Floor.
- Place Assets on the Factory Floor using the Asset Browser
- Insert Existing Models onto the Factory Floor.
- Modify Factory assets with the Factory Properties Browser

Lesson: Factory User Interface Getting Started

This lesson describes the application interface. You are introduced to the Layout Assembly Template you work with as you create and document your factory designs. As you start Autodesk Inventor with the Autodesk Factory Design Suite Utilities loaded, you will notice a different Getting Started Ribbon. This ribbon is specifically designed to work with and support the factory layout users. Several commands are familiar to veteran Inventor users while some are new and offer access to support and community features.

As with all computer applications, the User Interface (UI) is what you use to interact with the program. While the Autodesk Inventor UI shares many common themes and elements with other Microsoft Windows applications, it also has some unique elements and functionalities that may be new to you, even as an experienced CAD user.

In the following illustrations, the Autodesk Factory Design User Interface is shown. The first illustration shows the default Getting Started ribbon that is displayed when you start the program. The second illustration is the default Factory ribbon used to create and develop your factory design.

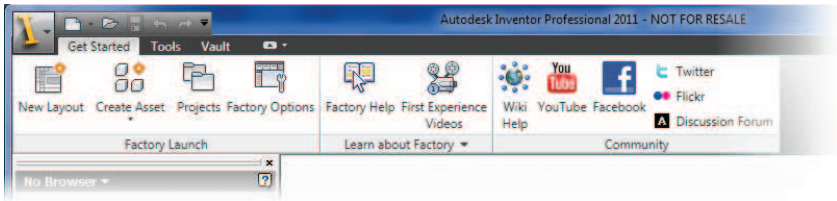

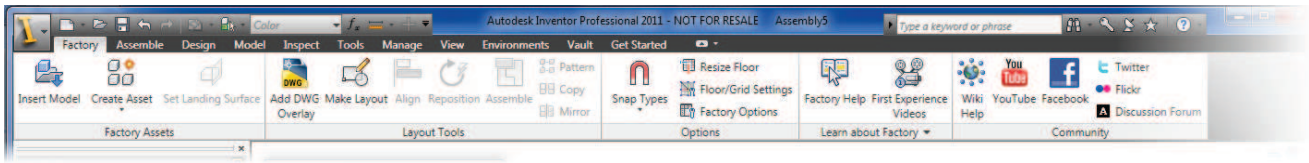

Objectives

After completing this lesson, you will be able to:

- Review the Factory Specific Ribbons.
- Create a New Factory Layout.
- Add a DWG Overlay to the Factory Floor.

The Factory User Interface – Getting Started Ribbon

The Getting Started Ribbon is the first ribbon you encounter when you start the application. The contents of the getting started ribbon are documented below.

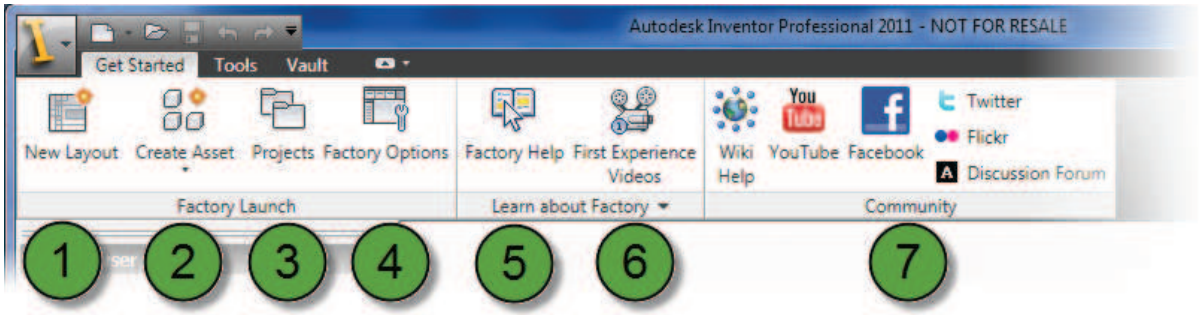

Item	Command	Function
1	**New Layout**	Starts a new Factory Layout document based on the default template.
2	**Create Asset**	The Autodesk Inventor Factory Design Utility provides users with predefined system content that is included with the product. The Create Asset command enables you to create new, or use, existing data. The data is authored and published into a User Assets library, with the provided system content.
3	**Projects**	Provides access to existing or new project workspaces.
4	**Factory Options**	Drawing layer visibility for DWG overlays, selection of template files, and snap settings are all managed using the Factory Options dialog box.
5	**Factory Help**	A specific help system supplied that supports the Autodesk Factory Design Utilities.
6	**First Experience Videos**	Provides access to online content reviewing the basic operations and commands unique to the Factory Design Suite.
7	**Community Access**	Provides access to popular online communities when additional content, communications, and discussions, are available.

The Factory User Interface – Factory Ribbon

The Factory Ribbon is the primary ribbon you use while designing your factory layout. Several commands from the Getting Started ribbon are also included on this ribbon. The contents of the Factory Ribbon are documented below.

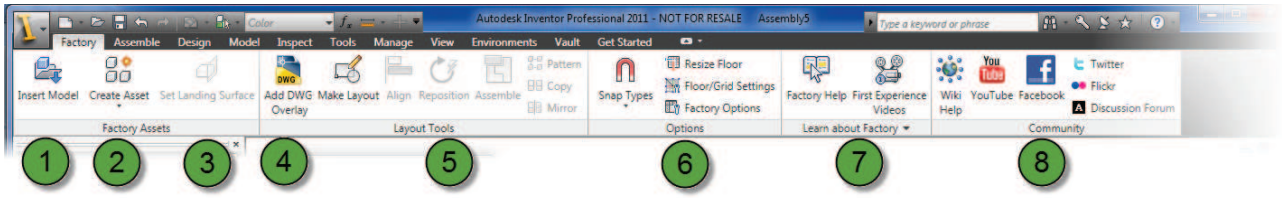

Item	Command / Panel	Function
1	**Insert Model**	Inserts and external model into the factory. A Factory Layout can be populated with component data from multiple sources. You can insert components from the System Assets and User Assets content libraries, or you can insert external content. External content represents any data that has not been customized and placed in the Factory Assets library. This data includes standard Inventor part and assembly files, or files from other CAD products.
2	**Create Asset**	The Autodesk Inventor Factory Design Utility provides users with predefined system content that is included with the product. The Create Asset command enables you to create new, or use, existing data. The data is authored and published into a User Assets library, with the provided system content.
3	**Set Landing Surface**	Allow users to define a different landing surface other than the default. The default landing surface is usually defined when an asset is authored. The component is oriented so the landing surface is positioned against the floor. If the component has not been authored, define a landing surface so the component snaps to the floor. Also, some assets can be placed in more than one orientation. Although the primary orientation is defined, you might have to rotate it for certain applications.
4	**Add DWG Overlay**	Allows users to paint 2D lines on the factory floor for reference. A 2D drawing of a factory floor layout showing all factory components and personnel in their proper locations can be created in AutoCAD. The drawing can also be created in another CAD program capable of outputting a file in DWG format. Using the Add DWG Overlay command, the drawing can then be overlaid onto the factory floor in Inventor Factory to serve as a snap-to guide in the precise placement of 3D factory assets.
5	**Layout Tools Panel**	Contains various tools that aid in the specific placement and orientation of Factory Assets.
6	**Options Panel**	Provides access to Floor settings and default Snap options.
7	**Learn about Factory Panel**	Provides access to a specific help system supplied that supports the Autodesk Factory Design Utilities and also provides access to online content reviewing the basic operations and commands unique to the Factory Design Suite.
8	**Community Panel**	Provides access to popular online communities when additional content, communications, and discussions, are available.

The Factory User Interface – Factory Options

The Factory Options dialog box contains four tabs. The DWG tab lets you display a layer dialog box listing all the layers present in a DWG overlay. Using this dialog box, layer visibility may be toggled on or off as required. It also includes a setting to enable a drawing preview of the DWG overlay. The Templates tab lets you specify the template file to be used for new factory layouts and for the creation of both part and assembly assets. The Snap tab controls whether snaps are enabled and sets the active distance for snaps. The Assets tab contains the default locations for assets download from the Autodesk Cloud. These assets are not locally available unless the user chooses to download them from the Cloud via the Asset Browser.

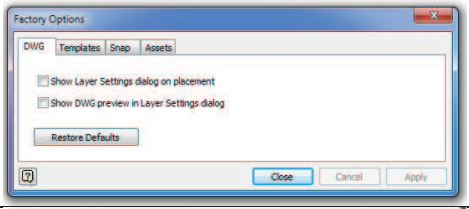	The *DWG* tab lets you display a Layer dialog box listing all the layers present in a DWG overlay. Using this dialog box, layer visibility may be toggled on or off as required. It also includes a setting to enable a drawing preview of the DWG overlay.
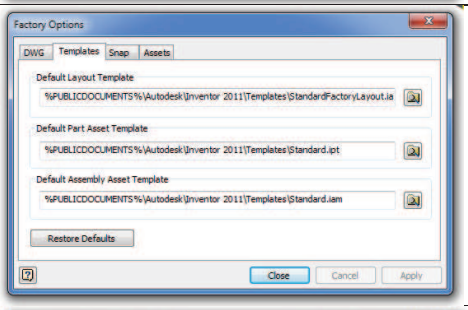	The *Templates* tab lets you specify the template file to be used for new factory layouts and for the creation of both part and assembly assets.
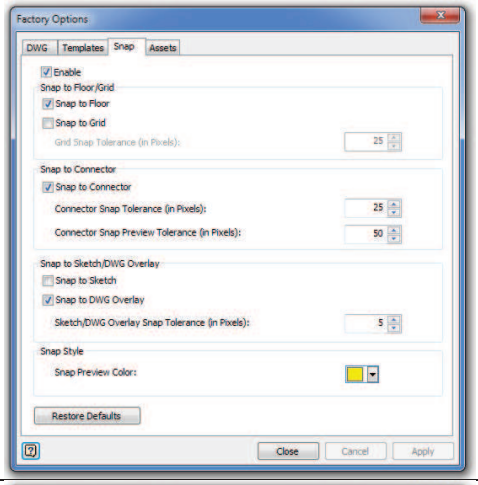	The *Snap* tab controls whether snaps are enabled and sets the active distance for snaps.
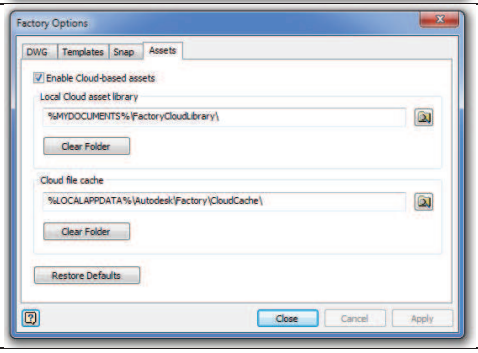	The *Assets* tab contains the default locations for assets download from the Autodesk Cloud. These assets are not locally available unless the users chooses to download them from the Asset Browser.

The Factory User Interface – Floor/Grid Settings

You can manage floor and grid settings using the Floor/Grid Settings dialog box. The settings enable you to customize the floor size and style, as well as the grid that appears on the floor.

The preference settings only affect the current document. Settings such as floor size and grid spacing can vary depending on whether you are designing a work cell or an entire factory. For example, you would want a small section of floor for designing a work cell. The floor size usually matches the building for laying out an entire factory. If you change the settings in the template, all new documents use those settings. For existing documents, you have to change the settings in each document if you want the new behavior.

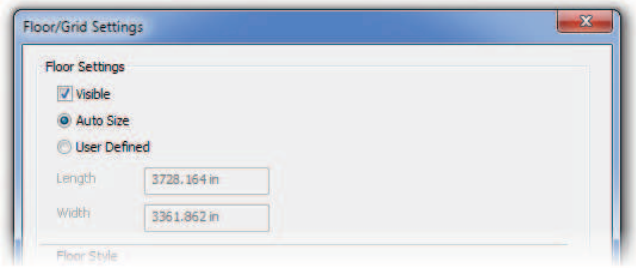	In the *Floor Settings* area, uncheck **Visible** to turn off the floor display. Select **Auto Size** to have the floor dynamically change size based on component placement, or **User Defined** to specify a fixed size for the floor. **Note:** To change the minimum floor size for Auto Size, select User Defined and enter the floor dimensions, then select Auto Size again.
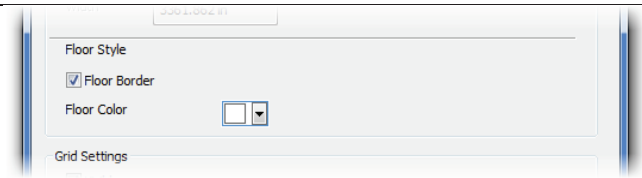	In the *Floor Style* area, uncheck **Floor Border** to turn off the display. To change the **Floor Color**, click the drop-down arrow to display the color palette. You can select one of the basic colors or click **Select Color**… to display the Color dialog box, where you can define a custom color.
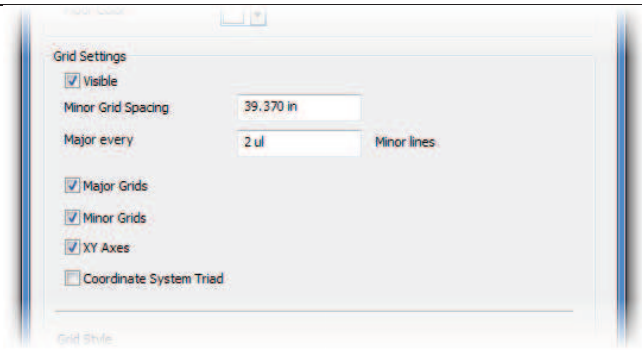	In the *Grid Settings* area, uncheck **Visibility** to turn off the grid display. You can individually control whether **Major Grids**, **Minor Grids**, **XY Axes**, and the **Coordinate System Triad** are displayed. The **Minor Grid Spacing** controls the distance between grid lines. By default, every other grid line is displayed as a major grid line. You can enter an integer from 1 through 512 to change the frequency of the Major grid lines.
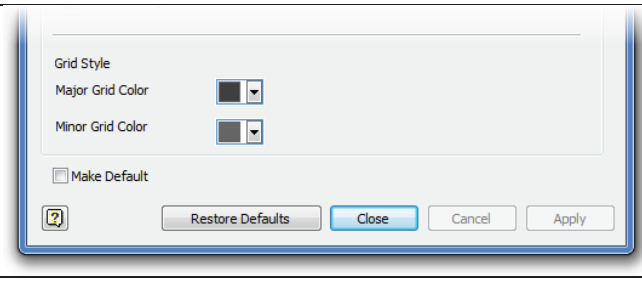	In the *Grid Style* area, you can set the **Major Grid Color** and the **Minor Grid Color**. Click the drop-down arrow to display the color palette. You can select one of the basic colors or click **Select Color…** to display the Color dialog box, where you can define a custom color.

The Factory User Interface – Resize Floor

You can use Resize Floor to change the floor size by manually dragging the borders. When you click Resize Floor, grips display at the corners and midpoints of the floor edges. When you drag a grip, a value input box displays the floor dimension.

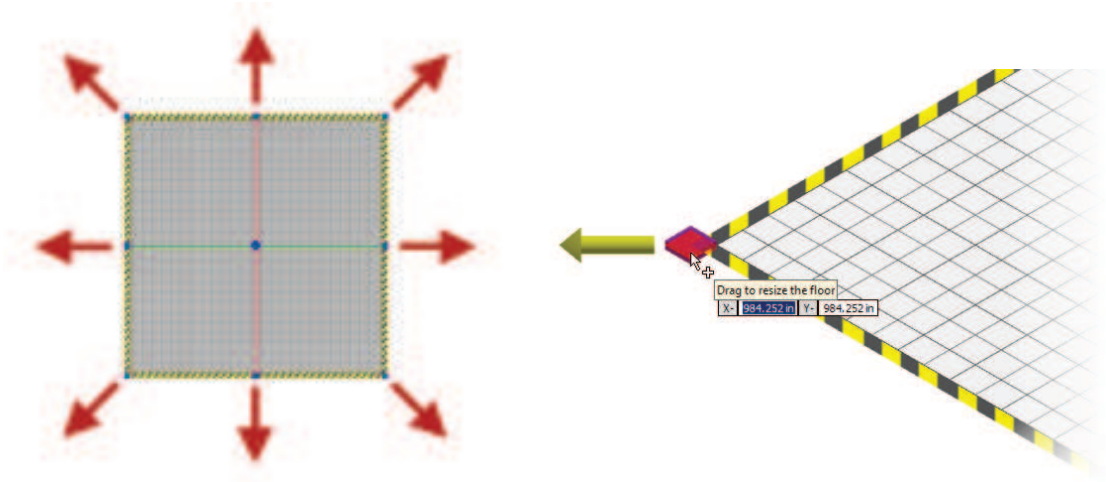

The new floor size is saved in the Floor/Grid Settings dialog box. If Auto Resize is enabled, Resize Floor also changes the minimum floor size settings.

A spherical grip also appears at the 0,0 factory floor origin. You can drag this grip up or down to change the Z-axis elevation of the factory floor (Shown in the image below).

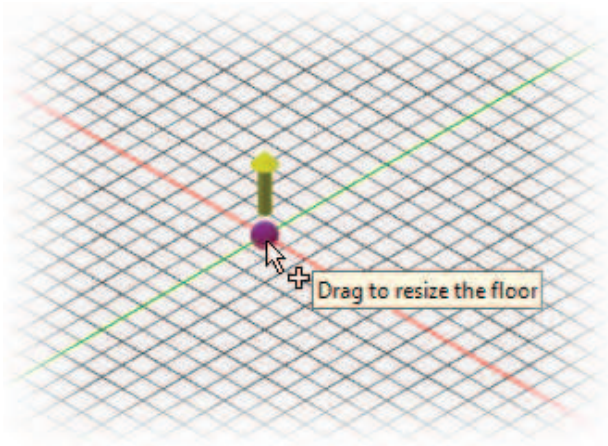

The Factory User Interface – Snap Types

You can quickly enable or disable snap types by using the Snap Types drop-down menu on the Options panel of the Factory tab. The snap options are synchronized with the settings in the Factory Options dialog box.

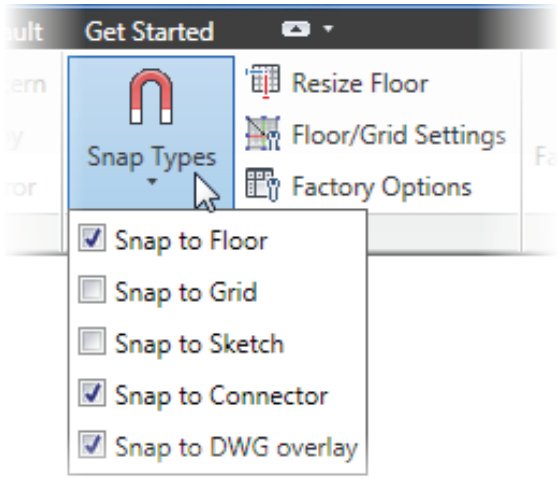

Snap to Floor	Snaps to the floor plane.
Snap to Grid	Snaps to the intersection of any major or minor grid lines.
Snap to Sketch	Snaps to endpoints, midpoints, or along any Inventor sketched entity.
Snap to Connector	Snaps to predefined connection points that have been defined in assets.
Snap to DWG Overlay	Snaps to endpoints, midpoints, or along any drawing entity on the DWG overlay.
	Note: If the Snap Types drop-down list is disabled, open the Factory Options dialog box, click the *Snap* tab, and activate the **Enable** check box.

Getting Started – DWG Overlay

A 2D drawing of a factory floor layout showing all factory components and personnel in their proper locations can be created in AutoCAD. The drawing can also be created in another CAD program capable of outputting a file in DWG format. Using the Add DWG Overlay command, the drawing can then be overlaid onto the factory floor in Inventor Factory to serve as a snap-to guide in the precise placement of 3D factory assets.

After placement, right-clicking the DWG overlay node in the assembly browser displays a pop-up context menu with various options. The drawing may be repositioned, scaled, rotated, or deleted. The visibility of drawing layers may also be toggled on and off.

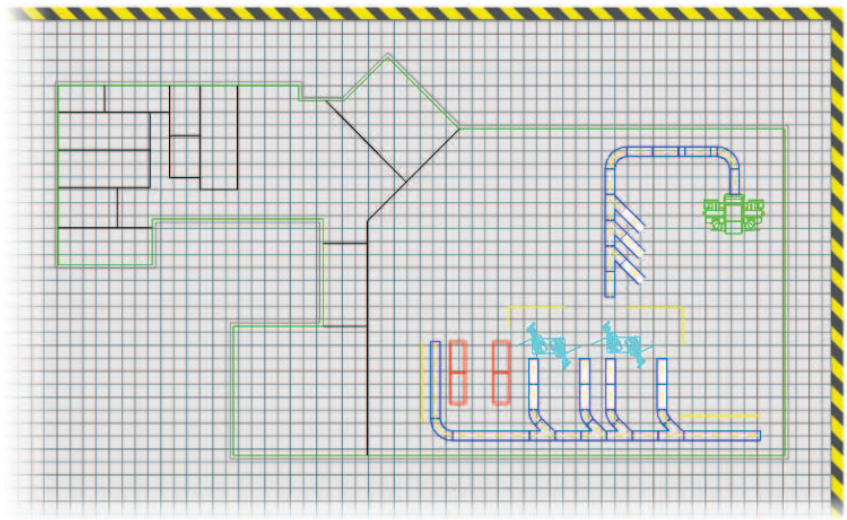

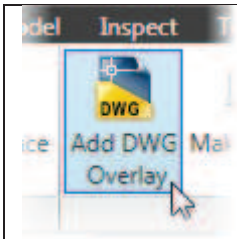	On the ribbon, click *Factory* tab >Layout Tools panel>**Add DWG Overlay** to display the Select DWG file dialog box.
Reposition DWG Overlays 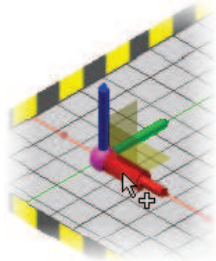	You can reposition a DWG overlay after placing it onto the factory floor. Using a 3-axis triad, you can move the overlay in the X and/or Y directions. The Z-axis of the triad lets you rotate the overlay into a new orientation. The translations or rotations are performed from the 0, 0 origin of the DWG overlay. To access the reposition option, right-click over the DWG overlay node and select **Reposition** from the shortcut menu.
Transform DWG Overlays	A DWG overlay can also be repositioned, as well as scaled, using the Transform command. Unlike the Reposition command which moves the overlay relative to the 0,0 origin of the drawing, the Transform command moves the overlay relative to the 0,0 origin of the factory floor.

Control Layer Visibility	Upon initial placement of a DWG overlay, you have the option to toggle on or off the visibility of any layers defined in the 2D drawing. This capability, as well as a drawing preview in the Layer Settings dialog box (if both are enabled using the Factory Options command) updates to reflect any changes you make to layer visibility. To access the Layer Control, Right-click over the DWG overlay node and select Layer Settings from the pop-up context menu. You can return to the Layer Settings dialog box at any time if you wish to change the on/off visibility status of any of the layers.
Update DWG Overlays	There is associativity between the 2D drawing from which the DWG overlay originated and the 3D factory layout. If any revisions occur to the original drawing file, you can read the changes back into Inventor Factory using the Update command. Right-click over the DWG overlay browser node and select Update from the pop-up context menu.
Delete DWG Overlays	A drawing overlay may be deleted at anytime. Right-click over the DWG overlay node and select **Delete** from the shortcut menu.

Getting Started – Make Layout

You can create an Inventor based layout sketch for the floor of the Factory Layout assembly that provides a 2D representation of the factory floor design. The layout uses 2D, Inventor based, sketch geometry to represent design components and their locations. The geometry can be created using standard Inventor sketch tools or you can import data from an existing DWG file.

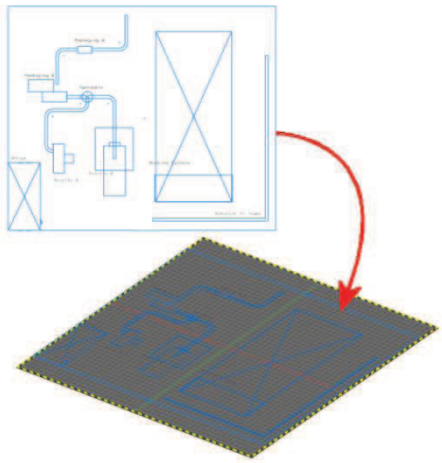

	On the ribbon, click *Factory* tab > Layout Tools panel > **Make Layout**.
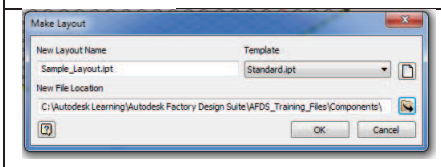	In the Make Layout dialog box, enter a name for the layout file, select its template file, and define its storage location. Click OK. The *Sketch* tab becomes the active tab.
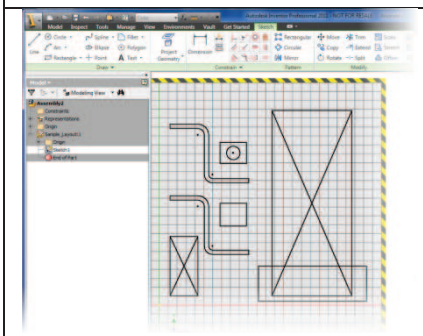	Use the standard Inventor sketching tools to define the layout or click **ACAD** in the Insert panel and import an existing AutoCAD DWG file. As an alternative, you might consider using the **Add DWG Overlay** command if you have an existing 2D layout of a factory floor.
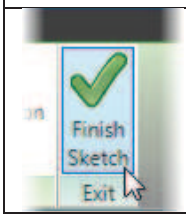	Click **Finish Sketch** to complete the layout and exit the sketch environment. The layout is automatically placed on the floor of the Factory Layout assembly. Multiple layouts can be created.

Exercise: Creating a Factory Layout.

In this exercise, you set your default factory options and start a new factory layout. Once the Layout is created, Floor and Snap settings are adjusted and a DWG Overlay is placed on the Factory Floor.

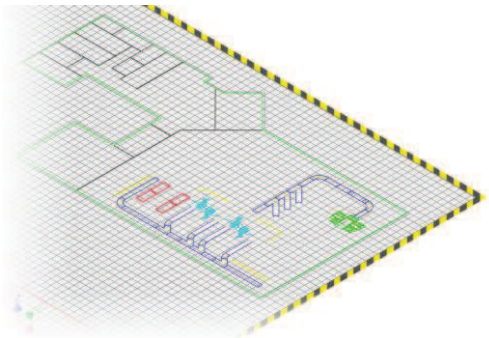

The completed exercise

1. Set your factory options
   - On the getting started ribbon click the **Factory Options** tool.

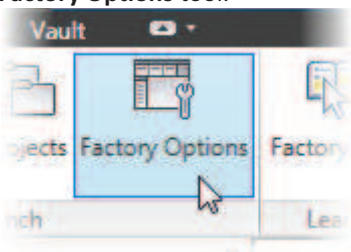

   - Set the **DWG** Overlay Options as shown below.

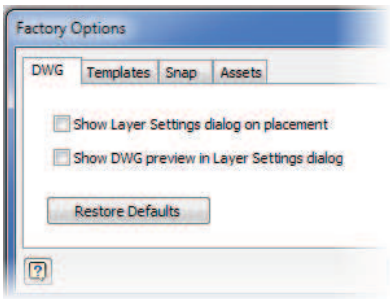

   - Review the other tabs available in the dialog box and then click close.

2. Start a New Factory Layout.
   - On the Factory Launch panel, click the **New Layout** tool.

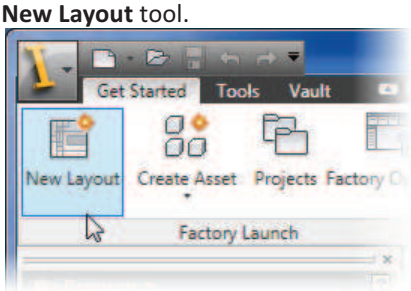

   - Note the presence of the Floor object (Unique to the Factory Design Suite).
   - Notice the Factory Ribbon active by default in this environment.

3. Review the Factory Floor Settings.
   - On the Options Panel, click the **Resize Floor** command.

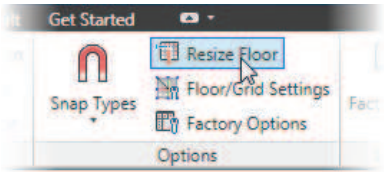

   - Drag the Grips at the edge of the floor to resize the floor manually.
     Note: Numeric values may also be entered.

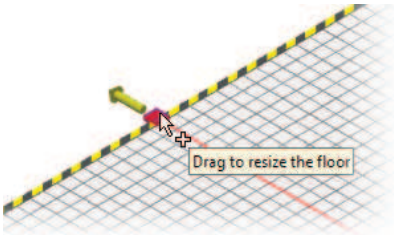

   - Right-click and select **Done** from the menu.

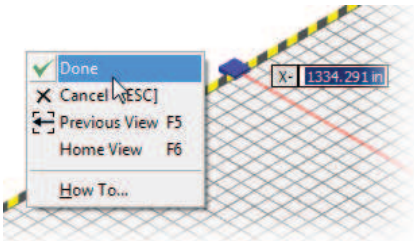

4. Review the Floor Display Options
   - On the Options Panel, click the Floor and Grid Settings tool.

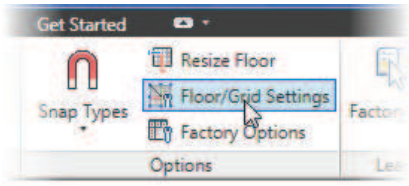

   - Toggle the visibility option in the Floor Settings area off, then click Apply. Toggle the visibility option in the Floor Settings area back on, then click Apply.

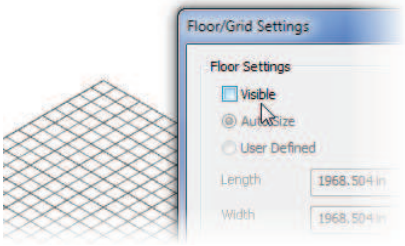

   - Repeat the previous step toggling the visibility of the Grid Settings Area On and Off.

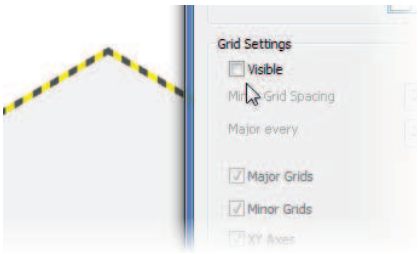

   - Return the Floor settings to the default settings and click OK.

5. Add a DWG Overlay to the Factory Floor.

10. On the Layout Tools Panel, Start the **ADD DWG Overlay** tool.

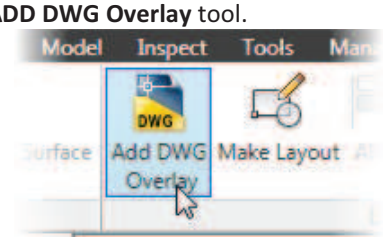

11. In the Select DWG Dialog box, navigate to the exercise files and select **ACA_012_Complete.dwg** and Click OK.

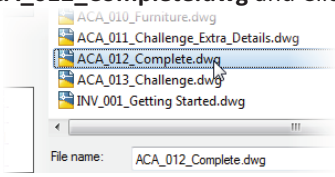

6. Click **OK** on the Warning that some graphical elements are not supported.

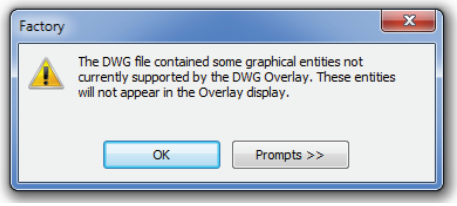

7. Set the Layer Settings for the DWG Overlay.
   - In the Browser Right click on the DWG node and select Layer settings from the menu.

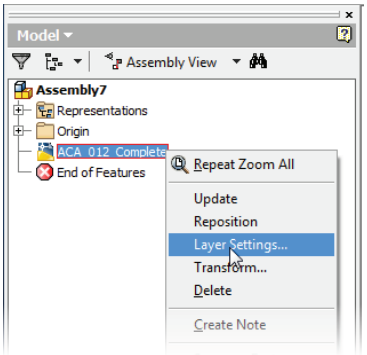

   - Set the Layer settings according to the following image and Click OK.

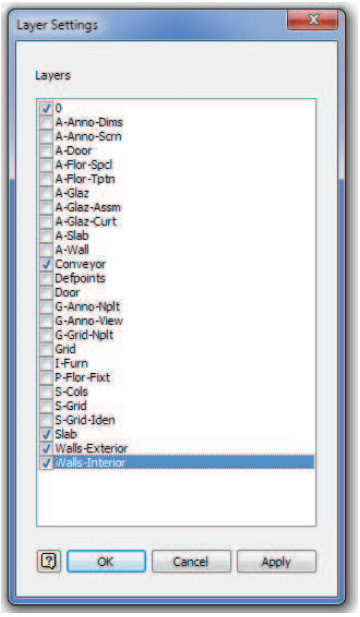

8. Close the file without Saving

Lesson: Placing Factory Assets

A factory design can be populated with component data from multiple sources. You can insert components that exist in the Factory Assets library or you can insert external content. The Factory Assets library contains part and assembly models for use in a Factory Layout assembly. The System Assets directory contains content provided with the Inventor Factory Design Utility and the User Assets directory is for content that you publish. You access the Factory Assets library from the Assets Browser.

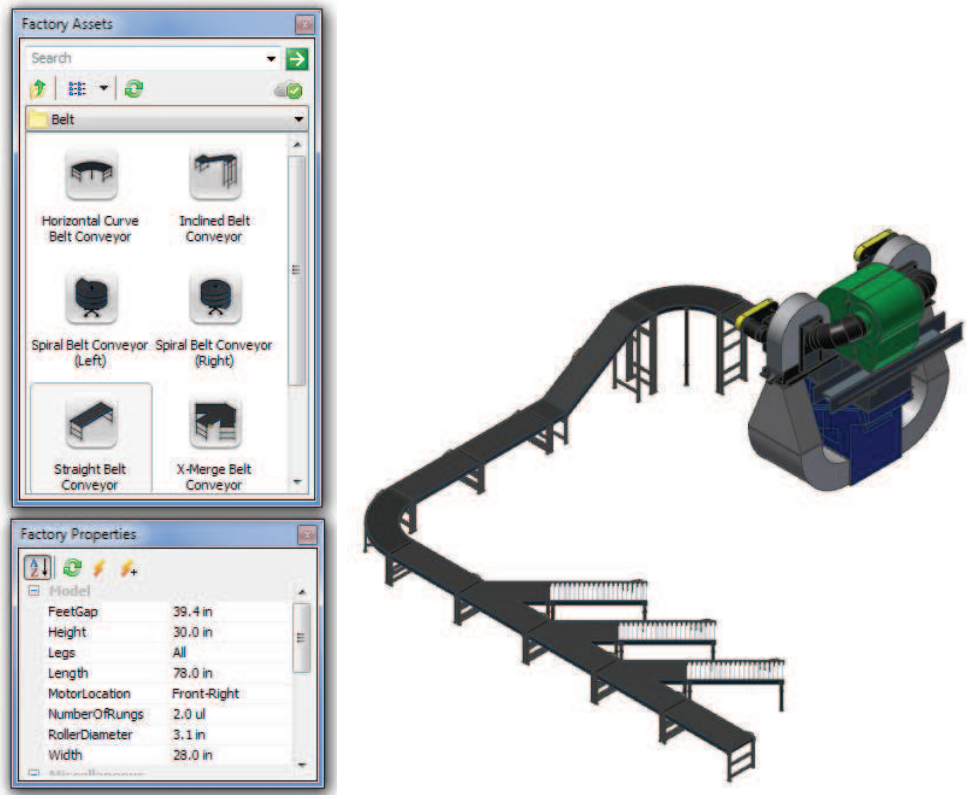

Objectives

After completing this lesson, you will be able to:

- Review the Contents of the Factory Asset Browser.
- Place Assets on the Factory Floor.
- Connect Assets together to form a conveyor line.

Placing Factory Assets - The Asset Browser

The System Assets directory contains content provided with the Inventor Factory Design Utility and the User Assets directory is for content that you publish. You access the Factory Assets library from the Assets Browser.

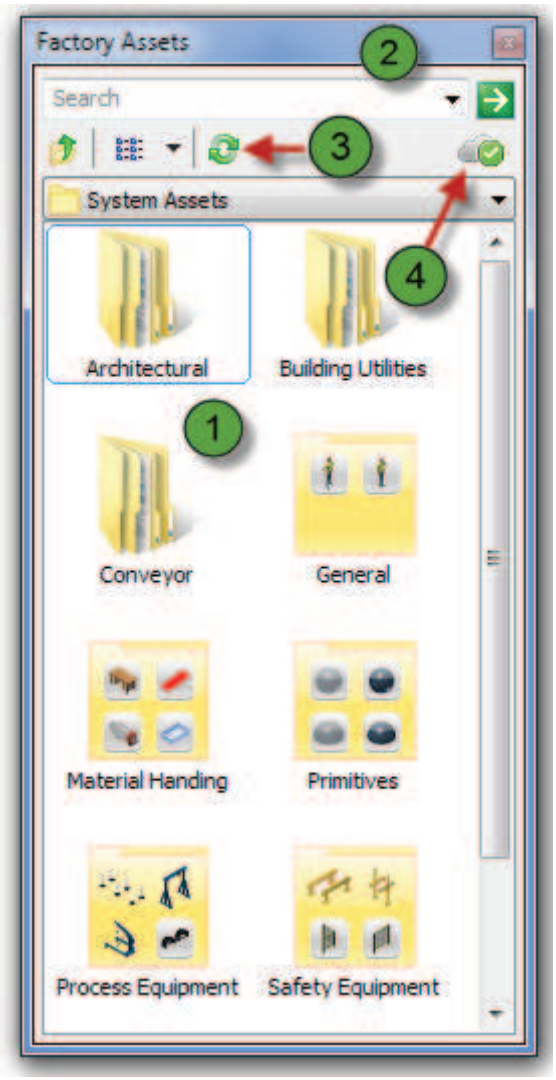

1. The main pane of the Factory Asset Browser displays a folder structure of common and custom factory assets. This pane allows the users to manually navigate thru the directory structure to locate the desired factory asset.
2. The Search window allows users to easily find a factory asset by entering the full or partial name of the asset. A list of valid search terms is dynamically displayed. You can click one of the terms to populate the search field.
3. Common Directory Navigation tools are available at the top of the asset browser. To return to the top level to access the User Assets content library, click the Folder up button . From this location, you can double-click folders to move lower or use the Folder up button to move higher in the tree structure.
   At the top of the Assets Browser, you can switch to display contents in a Tree View. You can then navigate through the Factory Assets library by expanding directories
   The refresh button offers a manual method of updating the Asset Browser display after custom assets have been published.
4. The Cloud Asset Enabled/Disabled icon displays the whether the ability to download Cloud based assets is Enabled or Disabled. This functionality is controlled by the Factory Options.

Placing Factory Assets – Factory

Once a component from the Assets Browser is placed, you can select it and change the available Model parameters or Miscellaneous parameters.

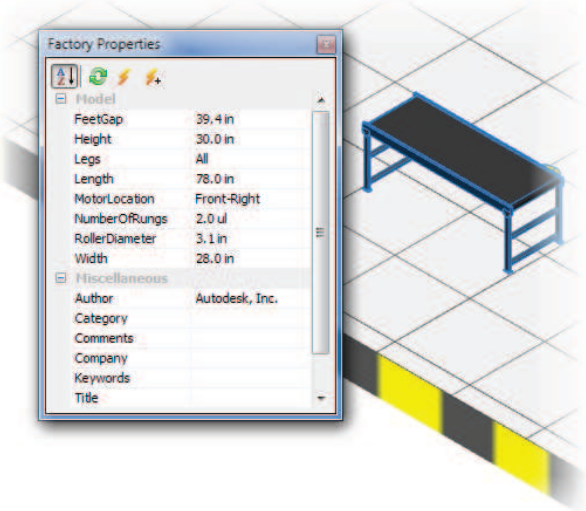	Once an asset is selected, any of the values displayed in the Factory Properties Browser can be edited. Only the Model parameters that were specified as Key parameters when it was published are listed in the Properties Browser. Only a select few iProperty parameters are also listed in the Properties Browser. These iProperty parameters include Name, Title, Author, Company, Catalog, Keywords, and Comments.
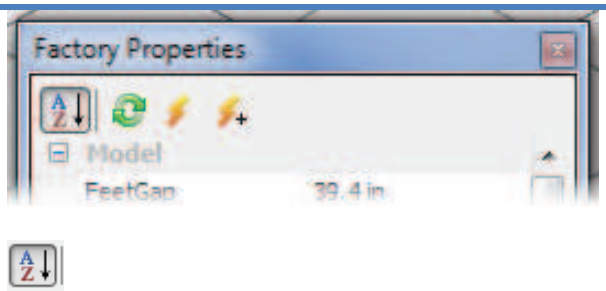	At the top of the Factory Properties browser there are several tools that assist in the organization and updating of the asset parameters. The first icon on the left is the Alphabetical tools, it allows you to sort the properties alphabetically.
	The Refresh Tool allows you to restore a modified value.
	The Update button allows you to finalize a change and update the model at the same time. You can also use the enter key on the keyboard to update the component after modifying a parameter value.
	The Update Other Instances button allows you to modify multiple instances of the same asset at one time.

Placing Factory Assets – Factory Asset Preview

After locating the content you want in the Assets Browser, you can right-click over the asset to display a pop-up context menu. The context menu for a System Asset offers two options - Explore and Preview.

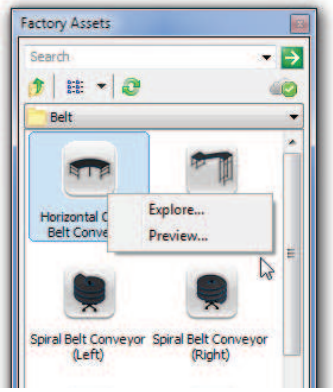

Clicking Explore opens Windows Explorer and navigates to the Factory Library folder location so you can verify where the asset resides.

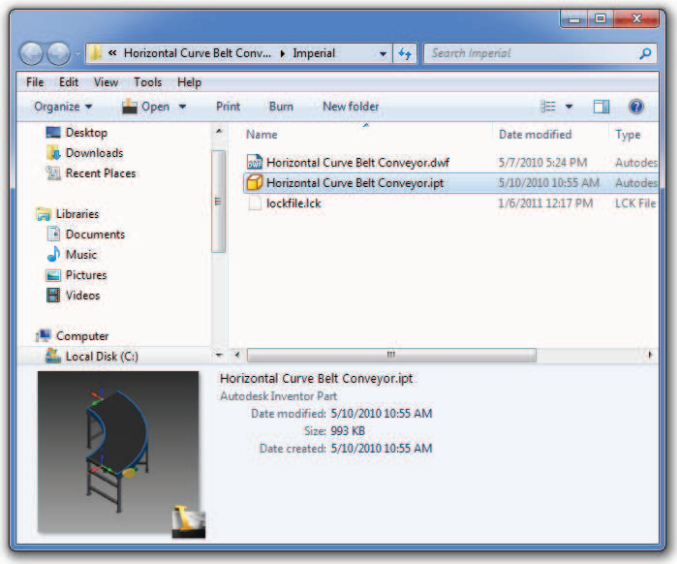

The Preview option launches a separate preview window displaying the selected asset. The preview window allows the users to zoom and rotate the asset prior to placement.

Exercise: Place Factory Assets

In this exercise, you place various factory assets as you complete a conveyor line.

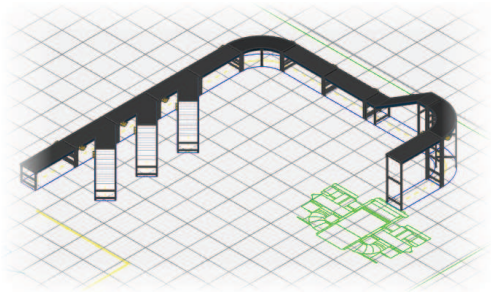

The Completed Exercise

1. Open the Exercise file. **AFDS_001_Place_Assets.iam.**
   - Right Click on the DWG overlay node and click update if necessary.

2. Navigate to an Asset using the Asset Browser.
   - Activate the Asset browser if necessary
     View ribbon / User Interface.

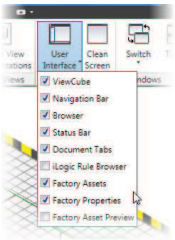

   - Manually navigate thru the default directory structure to the Straight Belt Conveyor
   - System Assets / Conveyor / Belt / Straight Belt.

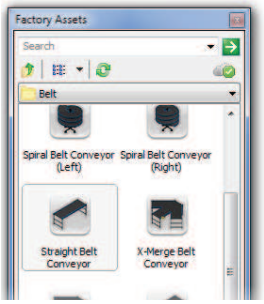

3. Preview the Factory Asset
   - Right Click on the Straight Belt Conveyor and select Preview from the menu.

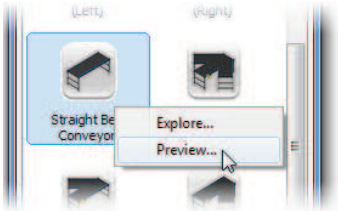

   - Using the Left Mouse Button, Drag and orbit the asset preview.
   - Using the Scroll Wheel, Zoom in and Out of the asset preview.
   - Close the Preview Window.

4. Place the first asset.
   - Using the Left Mouse Button, Drag from the Straight Belt Icon into the model pane.
   - Release the Left Mouse Button and notice that the conveyor moves freely across the factory floor.
   - Zoom into the DWG overlay and Left Click to place the conveyor at the snap point shown in the following image.

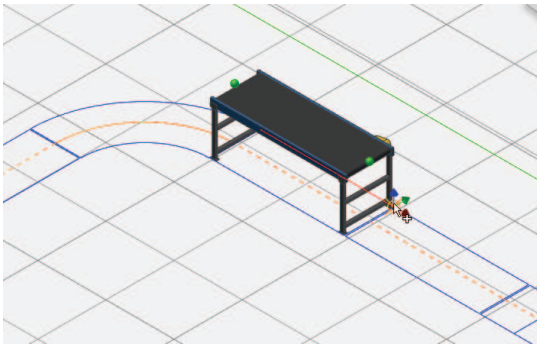

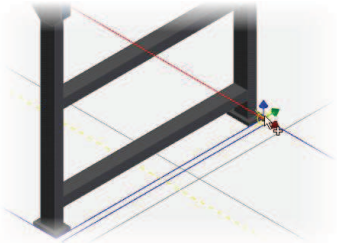

5. Specify the rotation angle.
   - Move the mouse around to specify the rotation angle Sub Step 2

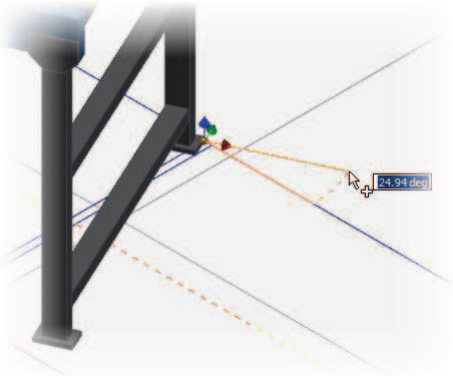

   - Lock the rotation angle by moving the cursor over another line in the DWG Overlay as shown in the following image.
   - Left Click to Place the define the rotation angle at **0.00**.

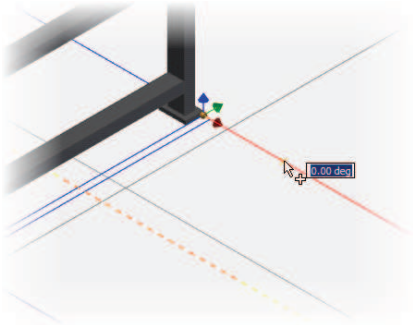

6. Add another instance of the conveyor using the connection points.
   - Another instance of the conveyor asset is automatically available for placement.
   - Slowly move the new asset near the conveyor that was placed previously. Notice the green connector dots at the end of each conveyor. When the assets come close to one another, a yellow line signifies that they are being drawn together.

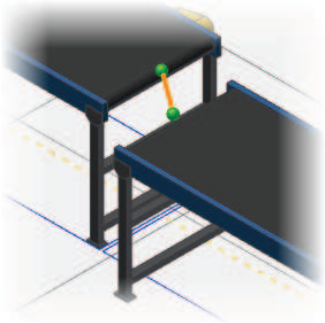

7. Continue placing the second asset with the connection points.
   - Move the new asset closer to the previous conveyor and the green connectors will snap together.

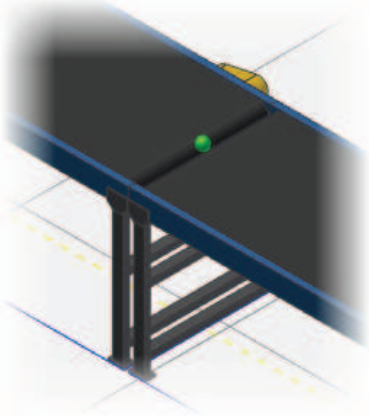

   - Left Click to place the second conveyor asset as shown in the following image.

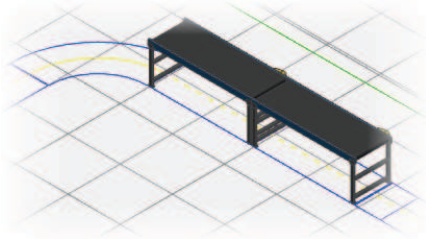

   - Right Click and select Done from the menu.

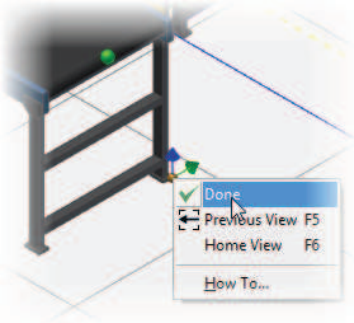

8. Using the process described above place the rest of the conveyor assets in the line.
   Note: All Assets use default lengths and widths.
   Note: The height of the legs will automatically adjust on the high end of the incline conveyor.
   - Use the image below to determine the proper asset.
   - When the line is complete, close the file without saving.
   - Left Click to Place the define the rotation angle at **0.00**.

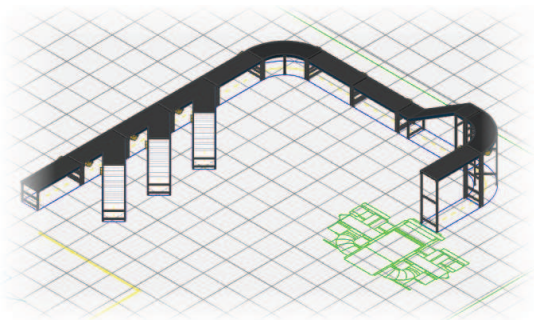

TIP

Disassembling Factory Assets

During the course of this exercise, it may be necessary to disconnect a factory asset after placing it.

To disconnect a factory asset:

- Hold the F7 button down
- Drag the desired asset away from the connected asset.
- Release the mouse button.
- Release the F7 Key.

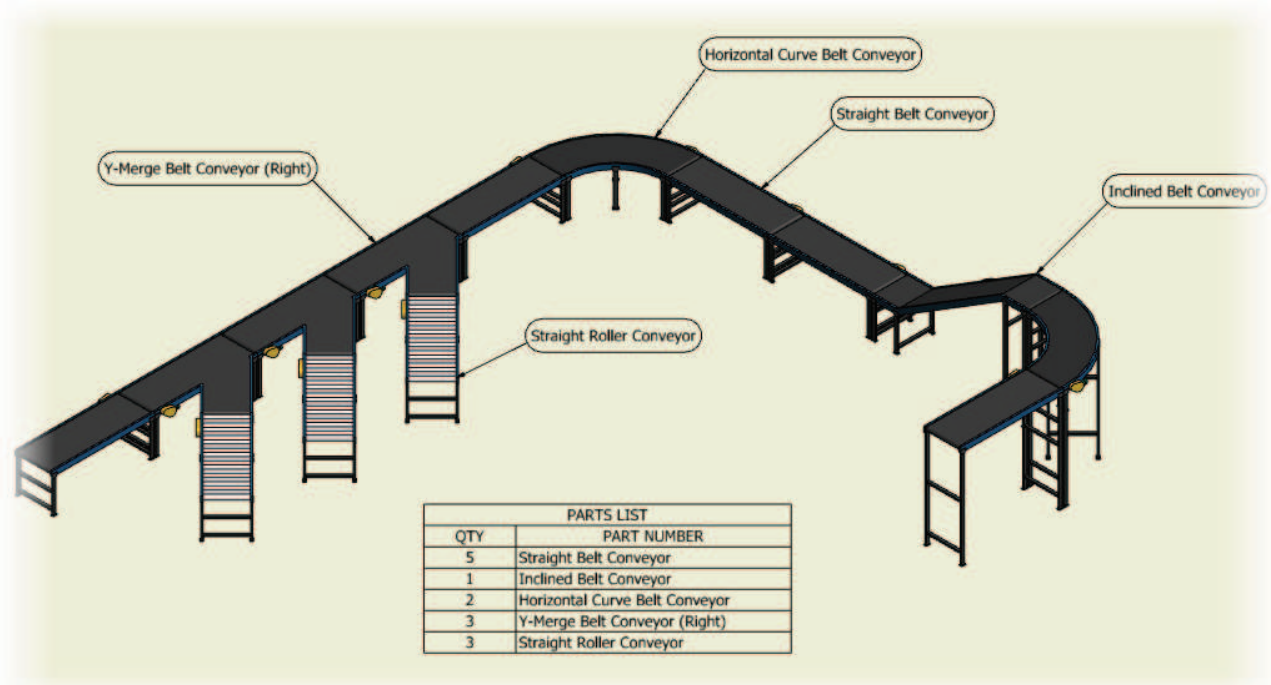

PARTS LIST	
QTY	PART NUMBER
5	Straight Belt Conveyor
1	Inclined Belt Conveyor
2	Horizontal Curve Belt Conveyor
3	Y-Merge Belt Conveyor (Right)
3	Straight Roller Conveyor

Lesson: Inserting a Model

The Factory Assets library will not contain all the required components for Factory Layout assembly. For example, infrequently used components are not usually published into the library. For these situations, you can add a model directly to the layout

A Factory Layout can be populated with component data from multiple sources. You can insert components from the System Assets and User Assets content libraries, or you can insert external content. External content represents any data that has not been customized and placed in the Factory Assets library. This data includes standard Inventor part and assembly files, or files from other CAD products.

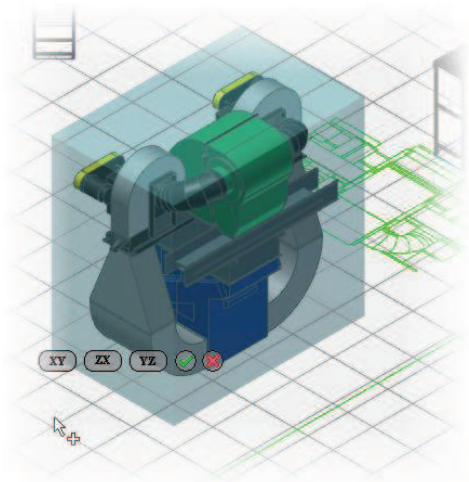

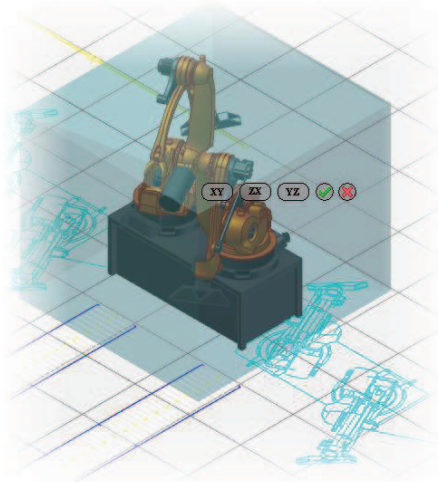

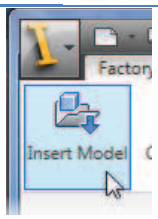

1. In the Insert Model dialog box, browse to the folder location, select the file to insert into the layout, and select Open.
   Drag the selected component to the required location in the layout and press the left mouse button to insert the component. The component is displayed inside a bounding box. The sides of the bounding box are parallel to the component origin planes. The insertion point is the corner of the bounding box that aligns with the origin coordinate system.
2. When locating the component in the Factory Layout assembly you can snap to the following:
   - **Grids**: Drag the component to the intersection of two gridlines on the factory floor and select once using the left mouse button. The Snap to Grid Snap Type must be enabled to allow grid snapping.
   - **Sketch**: Drag the component to a sketch entity on the layout and select once using the left mouse button. Components can be snapped to endpoints, midpoints, and along an entity. The Snap to Sketch Snap Type must be enabled to allow sketch snapping.
   - **DWG Overlay**: Drag the component to a 2D entity on the drawing overlay and select once using the left mouse button. Components can be snapped to endpoints, midpoints, and along an entity. The Snap to DWG Overlay Snap Type must be enabled to allow overlay snapping.
3. The component is placed in a default orientation in the XY plane. To adjust the orientation, select the XY, ZX, or YZ, mini-toolbar options that appear below the component.

Lesson: Reposition Components

The Reposition command helps you accurately position single or multiple components on a factory floor. A triad is provided for selecting axes or planes to reposition components by translation or rotation.

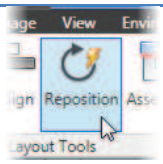	1. On the ribbon, click Factory tab >Layout Tools panel >Reposition
	2. Select the component you want to reposition. A triad appears next to the component. The triad position and orientation vary depending on where you click on the component. To select additional components, click the triad and then click a component. The triad moves to a position between the components. You can repeat the process to add additional components to the selection set. The triad position updates after each component is added.
	3. Use the triad to move or rotate the components. Depending on where you click on the triad, you can make planar (2D) translations, axial translations, or axial rotations.
	○ On the Triad, select a plane for 2D repositioning of the component. ○ To dynamically reposition the component, click and drag the plane. To manually reposition the component, click the plane once and enter the translation values in the Heads-Up Display. Press Enter to move the component and close the HUD.
	○ On the Triad, select the shaft of an axis for linear repositioning of the component. To dynamically reposition the component, click and drag the shaft of the axis to move the component. To manually reposition the component, click the shaft of the axis and enter the translation value in the Heads Up Display. Press Enter to move the component and close the HUD.
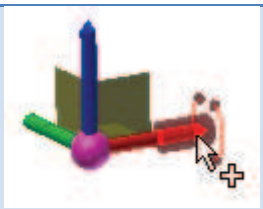	○ On the Triad, select the end of an axis to rotate the component. To dynamically rotate the component, click and drag the end of the axis to move the component. To manually rotate the component, click the end of the axis and enter the translation value in the Heads Up Display. Press Enter to rotate the component and close the HUD.
	4. Right-click and select Done to accept the changes and exit the Reposition command. Right-click and select Cancel to exit the Reposition command without moving the components.
	Note: The Reposition command can position the component off the floor, regardless of whether the Snap to Floor Snap Type is on

Exercise: Insert Model

In this exercise, you insert an existing model onto the factory floor.

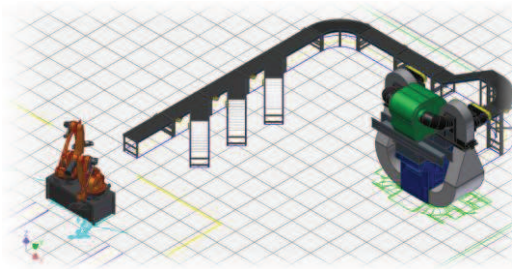

The Completed Exercise

1. Open the exercise file **AFDS_002_Insert_Model.iam**

2. Fourth Objective
   - On the Factory Asset Panel, start the Insert Model tool.
   - On the Insert Model Dialog, expand the Files of Type drop down and review the possible file types supported by the Factory Design Suite.

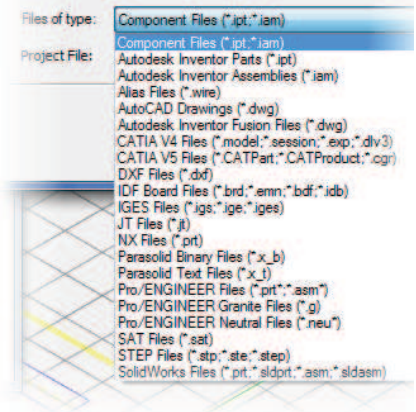

   - Navigate to the Components directory and select Blower.ipt.
   - Click Open

3. Modify the Landing face.
   - Move the model around the floor noticing the bounding box that surrounds the component.
   - Place the model close to the outline of the DWG Overlay shown below.

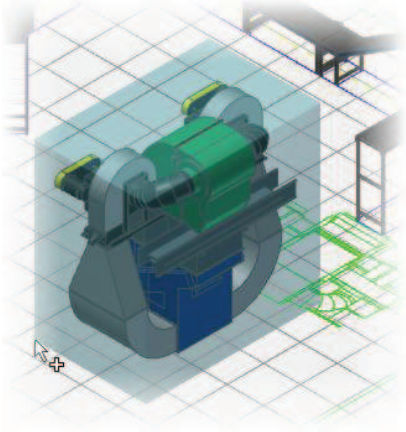

   - Left Click to Place the model.
   - Select the XY, ZX, or YZ buttons on the heads up display to change the default landing position.

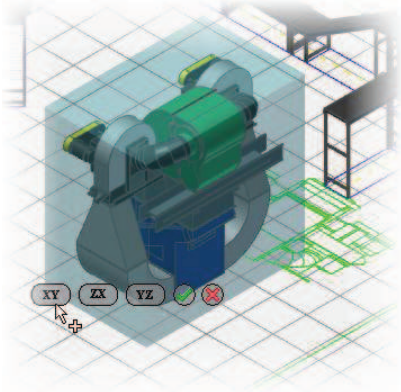

   - When the correct landing position is displayed, click the green checkmark.

4. Reposition the inserted model.
   - On the Layout Tools Panel, start the Reposition tool.
   - If necessary, select the inserted model.
   - Click on the vertical Blue (Z) axis as shown in the following image.

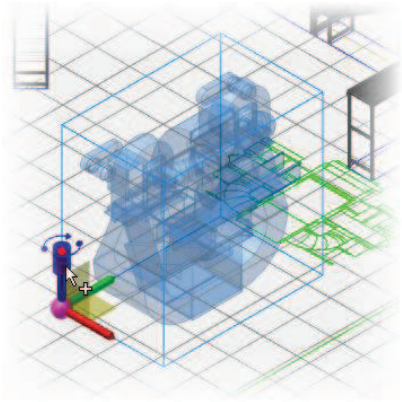

   - Enter the value **-90** in the heads up display.

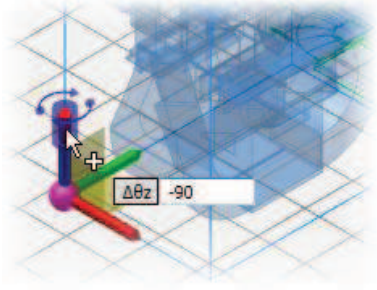

   - Press the Enter button.
   - Right Click and select Done from the menu.

5. Move the Model into position.
   - Use the View Cube to reorient the assembly to the Top View as shown.

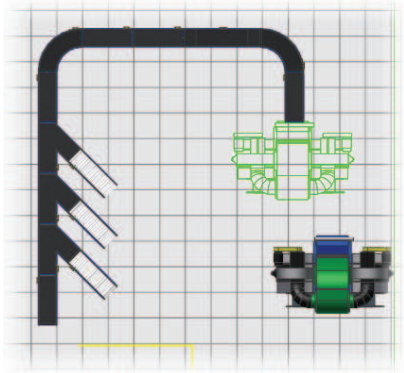

   - Drag the model to the desired position. Note: for this exercise the asset location will not be fully defined. Autodesk Inventor offers several methods for positioning components accurately.

6. Use the methods demonstrated in this exercise to position the Robot_Table.ipt on the second Conveyor Line, as shown in the following image.

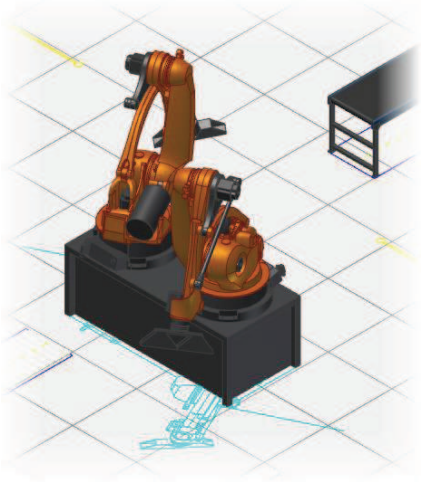

End of Exercise

Lesson: Aligning Components

Using the Align dialog box, you can align multiple components in various directions and orientations based on a selected reference component. The dialog box consists of two tabs - one for aligning components and the other for distributing components.

- **Selection**: Assigns a reference component and components to align to it.
- **Align Position**: Moves selected components to a location defined by another component without changing their orientation. The components can be aligned horizontally or vertically based on the left, right, top, or bottom edges of their respective bounding boxes relative to the reference component. They may also be aligned horizontally or vertically based on the centers of their respective bounding boxes.
- **Align Orientation**: Aligns selected components to a reference component without changing their position. Orients the X or Y axes of the selected component to the X or Y axes of the reference component.
- **Distribute**: The Distribute tab lets you align components horizontally or vertically based on their left edges, center points, or right edges. The alignment occurs between the selected components, and does not use a reference component. Distribute also aligns components so that they can be equally spaced along horizontal or vertical intervals.

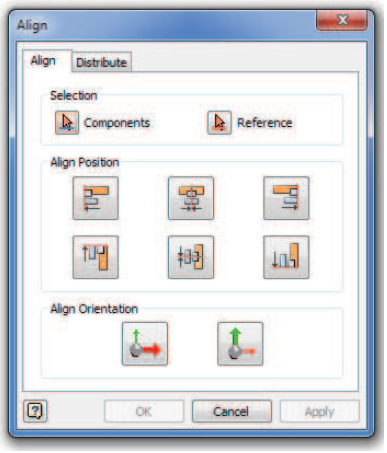

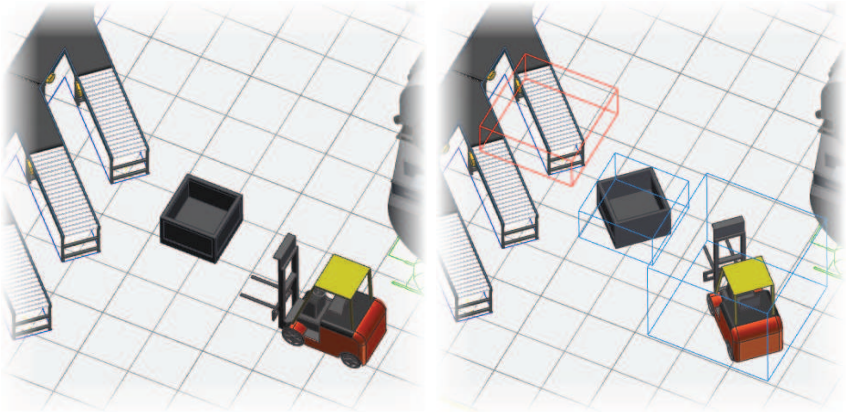

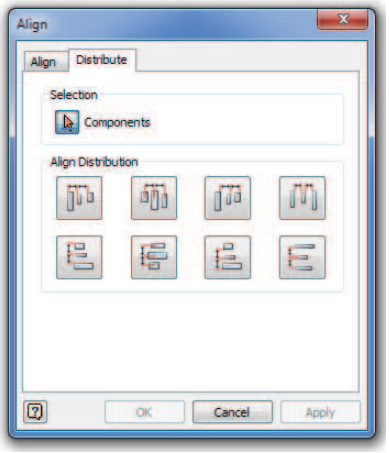

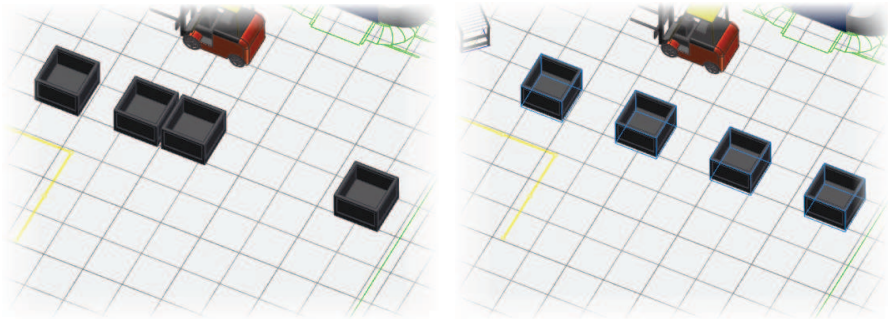

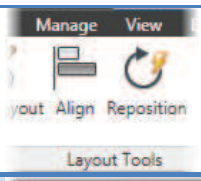	On the ribbon, click Factory tab > Layout Tools panel > Align. The Align dialog box opens with the Align tab active.
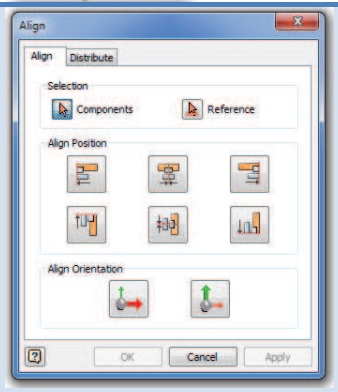	Use the Align dialog box to orient the X or Y axis of selected components to the X or Y axis of a reference component. You can choose from among the following: ▪ Align Position Horizontal Left ▪ Align Position Horizontal Center ▪ Align Position Horizontal Right ▪ Align Position Vertical Top ▪ Align Position Vertical Center ▪ Align Position Vertical Bottom
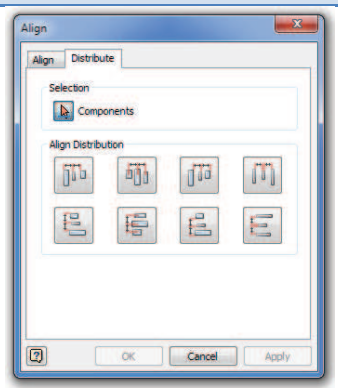	Click the Distribute tab and using the Components selection tool in the Selection section, select the components you want to distribute. You can choose from among the following: ▪ Align Distribution Horizontal Left ▪ Align Distribution Horizontal Center ▪ Align Distribution Horizontal Right ▪ Align Distribution Horizontal Interval ▪ Align Distribution Vertical Top ▪ Align Distribution Vertical Center ▪ Align Distribution Vertical Bottom ▪ Align Distribution Vertical Interval

Exercise: Align Components

In this exercise, use the Align command to align components and distribute components across the factory floor.

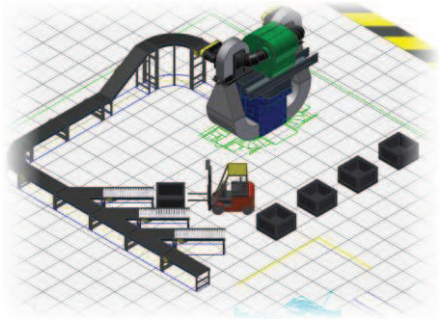

The Completed Exercise

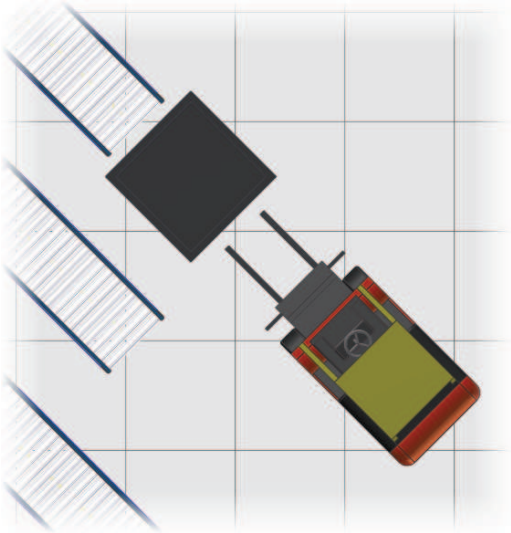

1. Open the exercise file **AFDS_003_Align.iam.**
2. Align the Forklift and Crate with the Roller Conveyor.
   - On the Factory Tools Panel, start the Align tool.

     

   - Select the Crate and the Forklift as shown in the following image.

     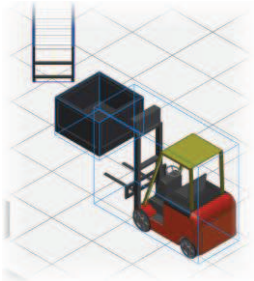

   - In the Align Dialog box, click the Reference selector
   - Select the Straight Roller Conveyor nearest the Crate.
   - Click the Align X button at the bottom of the Align Dialog Box.

     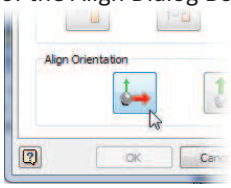

   - Click **OK**.
   - Drag the Crate and Forklift into position as shown in the following image.
3. Align the 4 Crates.
   - Start the Align command again.
   - Select the 3 crates on the right as shown in the following image.

     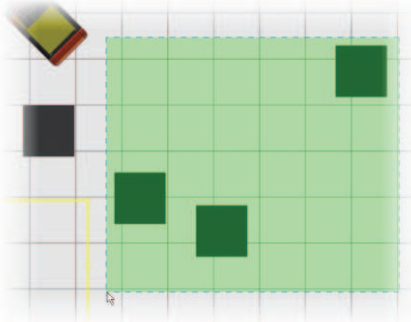

   - Click the Reference selector in the dialog box and select the left Crate.
   - Select Align Position Vertical Top.

     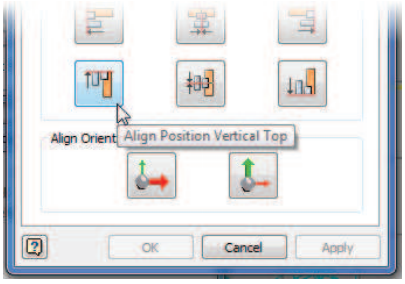

   - Click **Apply**

4. Distribute the Crates evenly.
   - Start the Align command if necessary
   - Click the Distribution tab.
   - Select the 4 crates as shown in the following image.

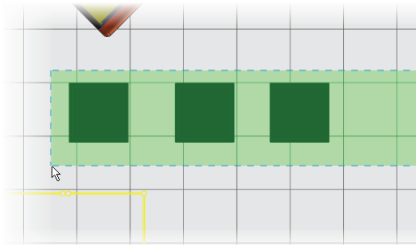

   - Click the **Align Distribution Horizontal Left** option.

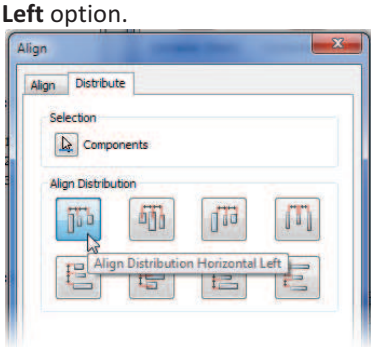

   - Click **OK**.

End of Exercise

Lesson: Modify Asset Properties

Values for any of the parameters listed in the Factory Properties browser can be selected and edited to change the properties of the component. Any changes made to the selected component only reflect in that specific instance of the component. Changes do not affect the Factory Assets library.

The Properties Browser becomes populated with component Model and Miscellaneous parameter data when a parameterized component is selected in the Factory Layout assembly. Model parameters represent the modeling parameters that have been specified as Key Parameters within a component. The Miscellaneous parameters represent specific iProperty parameters that can be modified.

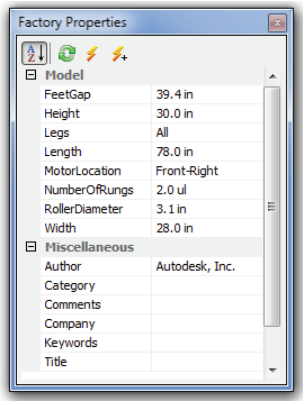

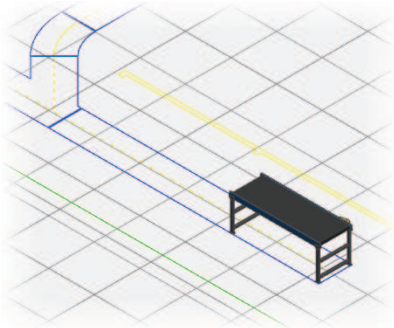

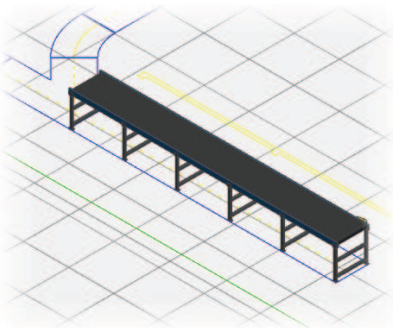

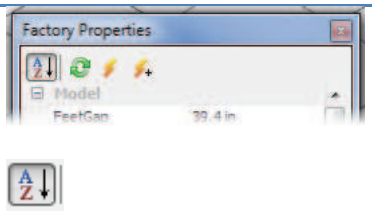	At the top of the Factory Properties browser there are several tools that assist in the organization and updating of the asset parameters. The first icon on the left is the Alphabetical tools, it allows you to sort the properties alphabetically.
	The Refresh Tool allows you to restore a modified value.
	The Update button allows you to finalize a change and update the model at the same time. You can also use the enter key on the keyboard to update the component after modifying a parameter value.
	The Update Other Instances button allows you to modify multiple instances of the same asset at one time.
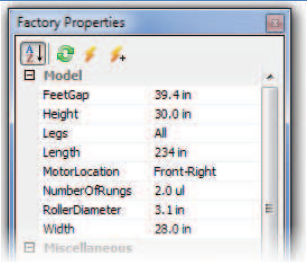	The Model section of the Factory Properties browser provides access to the modeling parameters that have been specified as Key Parameters within the asset.
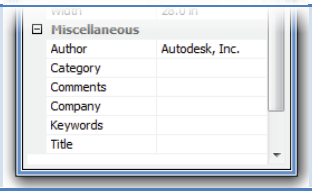	Only a select few iProperty parameters are listed in the Factory Properties browser. These iProperty parameters include Name, Title, Author, Company, Catalog, Keywords, and Comments.

Exercise: Modify Asset Properties

In this exercise, place and modify assets using the Factory Properties browser.

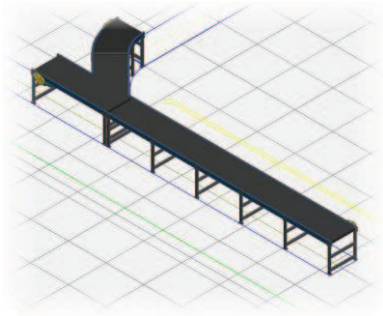

The Completed Exercise

1. Open the exercise file **AFDS_004_Modify_Asset_Properties.iam**

2. Place a Straight Belt Conveyor on the DWG Overlay as shown in the following image.

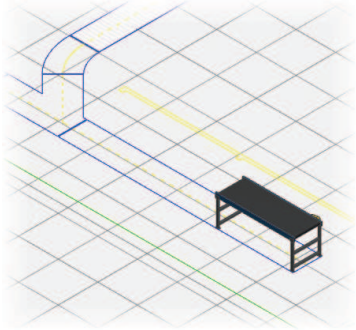

3. Modify the Length Parameter of the new asset.
   - Activate the Factory Properties browser if necessary. The option is accessed on the View Tab under the User Interface tool.

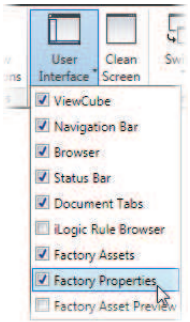

   - Modify the Length Parameter with the Value of **19'6".**

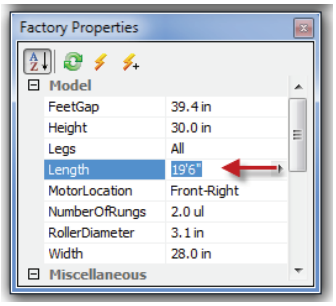

   - Press Enter or click the Update tool at the top of the Factory Properties browser.

   - Drag the updated asset into the proper position as shown in the following image.

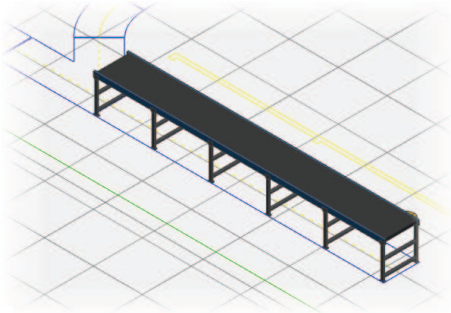

4. Add a Y Merge Belt Conveyor (Left) as shown in the following image.

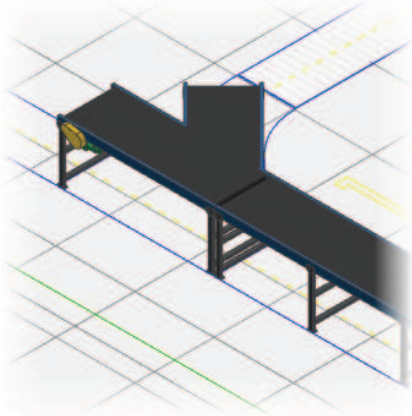

5. Add and modify a Curved Belt Conveyor.
   - Add a Horizontal Curve Belt Conveyor as shown in the following image.

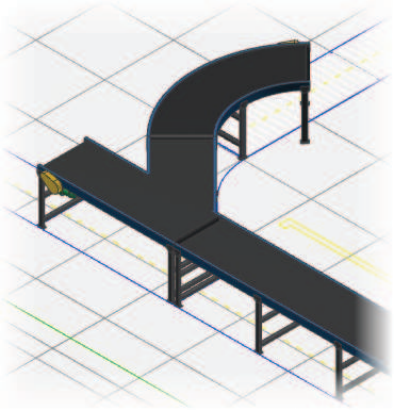

   - Select the new asset and modify the angle value in the Factory Properties browser. Change the Angle value to **45**.
   - Click the Update tool on the Factory Properties browser.

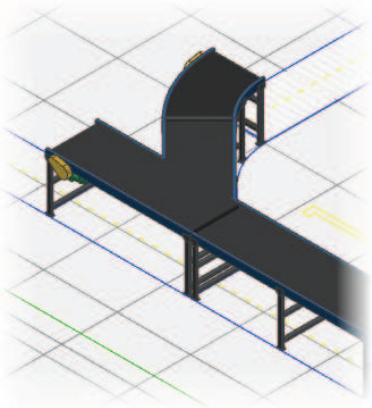

End of Exercise

Exercise: Challenge

In this exercise, you practice the processes learned in this chapter.

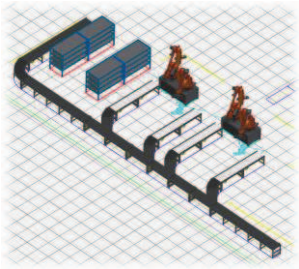

The Completed Exercise

1. Open the exercise file **AFDS_005_Challenge.iam**

2. Place and modify the necessary assets to complete the second conveyor line.

- Use the diagram provided below to determine the correct asset or model to place on the factory floor.
  Note: Unless otherwise noted, use the default Parameters.

Tips to complete the Challenge Exercise

- Use the Copy / Paste method to quickly create copies of assets. After pasting the asset into the factory layout, drag it into position as normal.
- Copy multiple assets by holding the shift button down while selecting.
- All Long Conveyors are 19’6” in Length.
- The Storage Rack assets are located in the System Asset folder, in the Material Handling directory.
- When Placing the Storage Racks, modify the ColumnNumber value to **2**, and the RowNumber value to **1**.

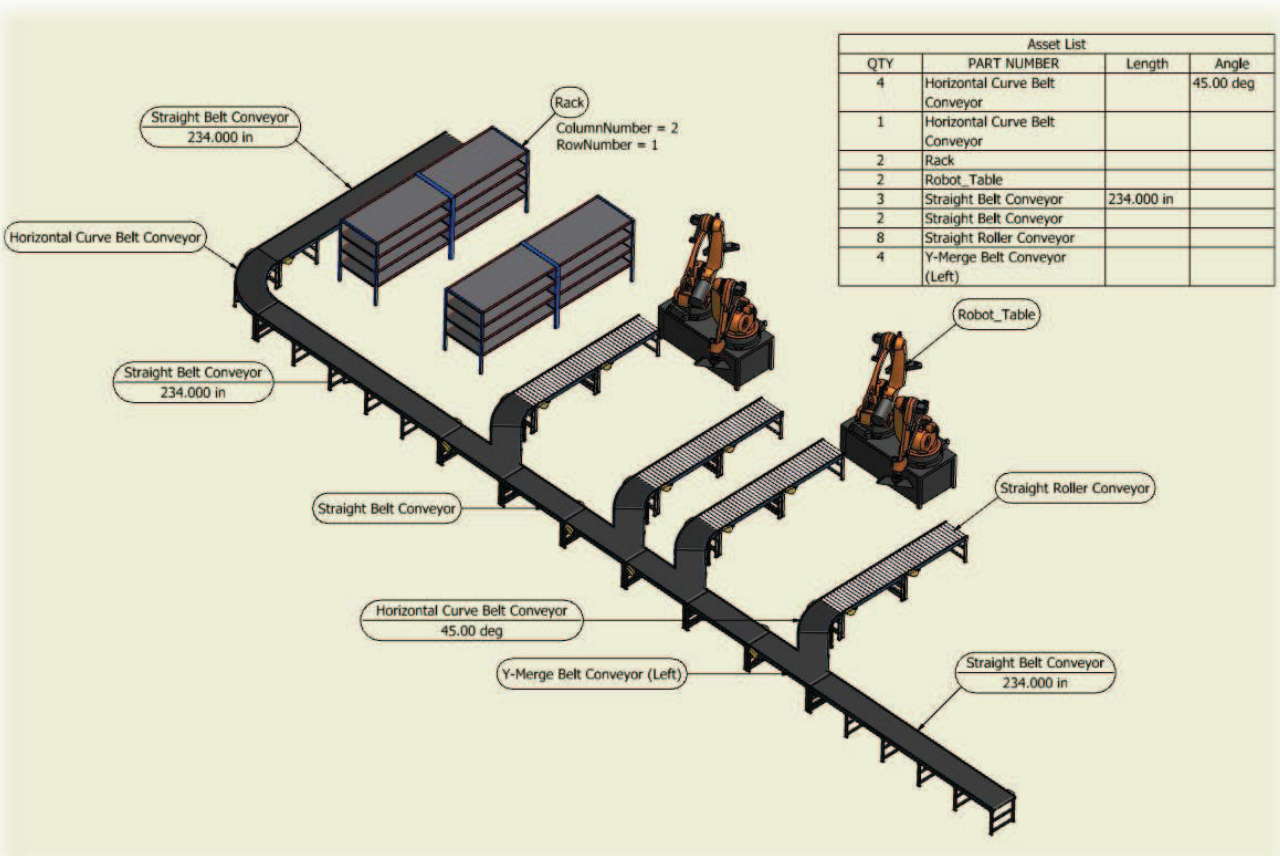

Asset List

QTY	PART NUMBER	Length	Angle
4	Horizontal Curve Belt Conveyor		45.00 deg
1	Horizontal Curve Belt Conveyor		
2	Rack		
2	Robot_Table		
3	Straight Belt Conveyor	234.000 in	
2	Straight Belt Conveyor		
8	Straight Roller Conveyor		
4	Y-Merge Belt Conveyor (Left)		

Chapter Summary

This chapter presented the tools and recommended workflows for basic shape design. Using these techniques, you can now create more complex 2D sketches at different locations on your part, combine multiple 3D features to create various shapes, and modify those shapes at any time during the design process.

Having completed this chapter, you can:

- Use the Factory Specific Ribbons
- Create a New Factory Layout.
- Add a DWG Overlay to the Factory Floor.
- Place Assets on the Factory Floor using the Asset Browser
- Insert Existing Models onto the Factory Floor.
- Modify Factory assets with the Factory Properties Browser

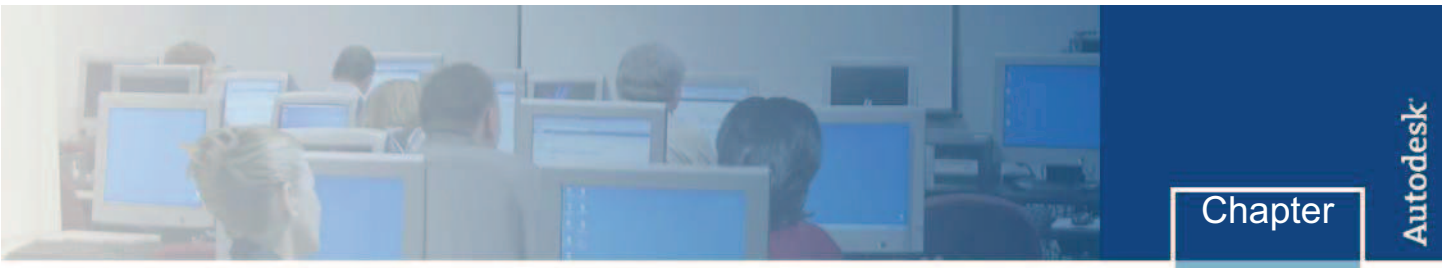

Chapter

10

Factory Asset Publishing

One of the main keys to success and productivity with the Autodesk Factory Design Suite, is the ability for each users to establish and maintain a custom library of factory assets unique to the products and processes of individual customers. In previous chapters, we have demonstrated the process of creating Inventor components that will be used as factory assets. In this chapter we will demonstrate the process of establishing Landing Surfaces and connection point. We will also explore the process of publishing these assets to a user library that is accessible from the Factory Asset browser.

Objectives

After completing this chapter, you will be able to:

- Use the Asset Builder to Create Factory assets.
- Establish a Landing Surface for a new factory assets.
- Establish Connection Points for new factory assets.
- Identify Key Parameters for use during factory asset placement.
- Publish Assets to a custom user library.
- Test new Factory Assets.

Lesson: Asset Creation

The Autodesk Inventor Factory Design Utility provides users with predefined system content that is included with the product. The Create Asset command enables you to create new, or use, existing data. The data is authored and published into a User Assets library, with the provided system content. Standard Inventor parts and assemblies can be created and used as content for a factory library, or you can import existing Inventor part and assembly files.

Content in the Factory Assets library can be parameterized to capture its intent in the Factory Layout assembly. Therefore, the data that drives it must contain the necessary parameters. The import process creates base features in Inventor that are representative of the geometry and topology in the source file. You can use Inventor commands to adjust the base features and add new features; however, you cannot modify or parameterize the base feature. If secondary Inventor features contain all required parameters necessary, you can use the imported data.

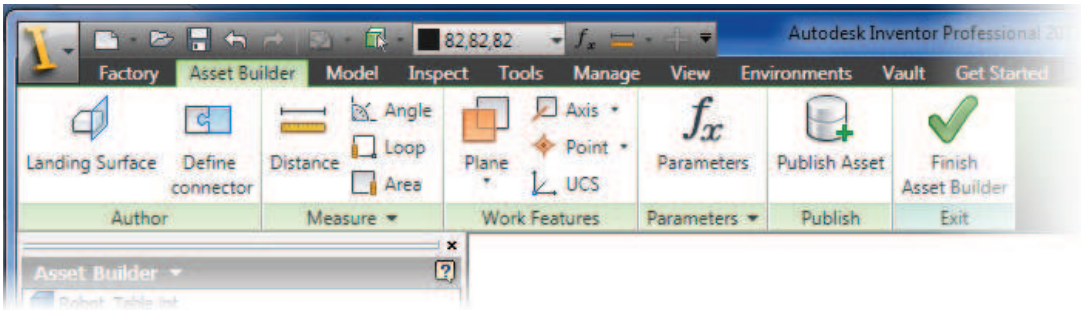

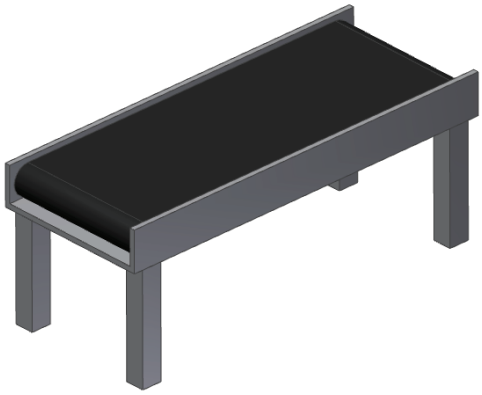

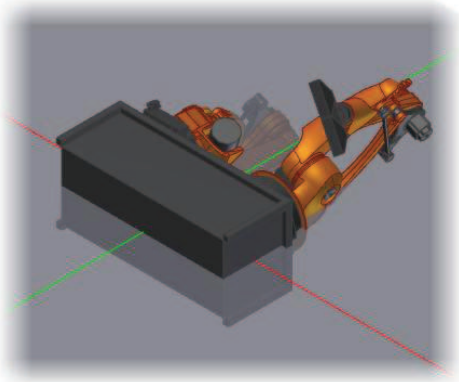

Objectives

After completing this lesson, you will be able to:

- Establish a Landing Surface for a new factory assets.
- Establish Connection Points for new factory assets.
- Identify Key Parameters for use during factory asset placement.
- Publish Assets to a custom user library.
- Test new Factory Assets.

Asset Creation

The Autodesk Factory Design Utility provides a content library of System Assets that you can use to create factory layouts. You can author and publish additional assets into the library. You can create the models in Inventor, or you can use models from other CAD systems.
The Asset Builder environment provides tools to author and publishes the models into the library. The authoring tools define the interface geometry and the key parameters. The publishing tool saves the file to the library.

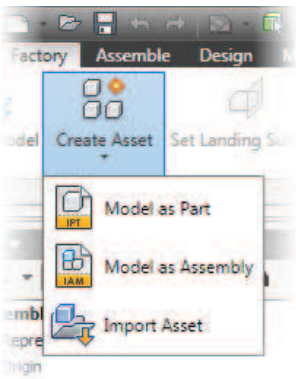	The Create Asset tool is located in multiple locations. It is available in the following locations. ▪ Getting Started ribbon > Factory Launch panel ▪ Factory ribbon > Factory Asset Panel ▪ With an Inventor Part Open, The Environments ribbon
 Model as Part	The Model as part option allows the users to create a factory asset from scratch using a new Inventor part file.
 Model as Assembly	The Model as Assembly option allows the user to create a factory asset from scratch using a new Inventor assembly file.
 Import Asset	The Import Asset option allows the user to create a factory asset from an existing model file. The user can choose to use an existing Inventor model or select from various model formats for import.
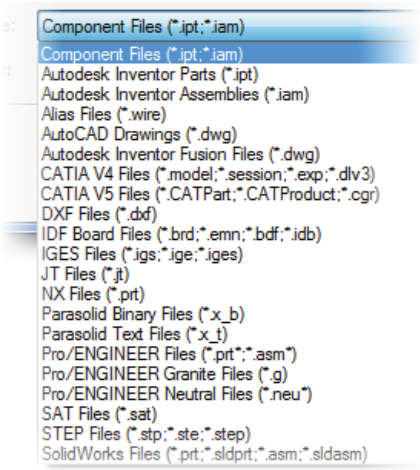	This image shows the various file types available for import as factory assets.

Asset Builder

After all model features and parameters are created, the Asset Builder is used to convert the model to an asset. The Asset Builder environment provides tools to author and publish the models into the asset library. The authoring tools define the interface geometry and the key parameters. The publishing tool saves the file to the asset library.

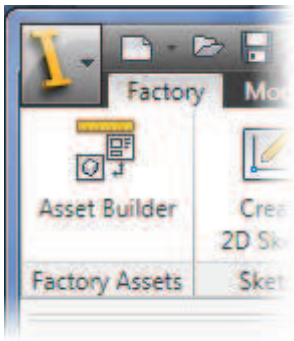	The Asset Builder tool is available on the Factory ribbon in the Inventor part and assembly environments. Click this tool to launch the Asset Builder environment.

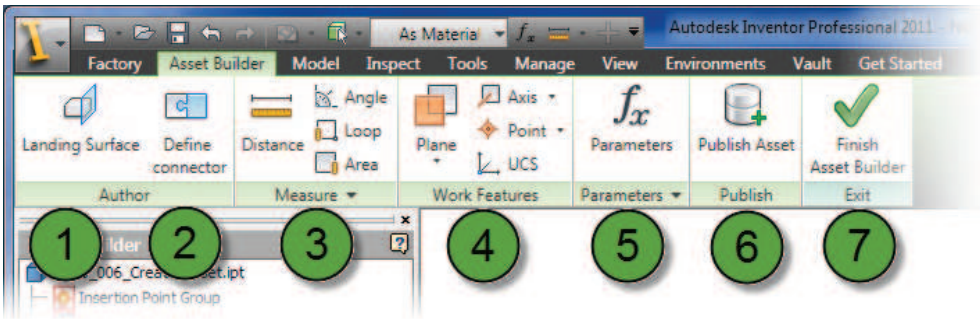

1. Set Landing Surface	Defines a landing surface and insertion points on a Factory Asset.
2. Define Connector	Defines Connection points on a Factory Asset.
3. Measure Panel	The Measure tools are provided for the asset authoring process.
4. Work Features Panel	The Work Features are provided for the asset authoring process.
5. Parameters Panel	Provides access to the Parameter table.
6. Publish Asset	Starts the Publish Asset process.
7. Finish Asset Builder	Exits the Asset Builder Environment.

Asset Creation

Setting a Landing Surface

Components in a Factory Layout assembly design are usually placed onto the floor. For the component to orient itself properly relative to the floor, it requires a defined landing surface. The landing surface defines the plane on the component that is positioned relative to the floor. When authoring content, it is important to use the Landing Surface command to establish how the component is located relative to the factory floor.

Note: Establishing a landing surface on a component is not required for publishing to the Factory Assets library.

All components provided in the System Assets content of the Factory Assets library have predefined landing surfaces.

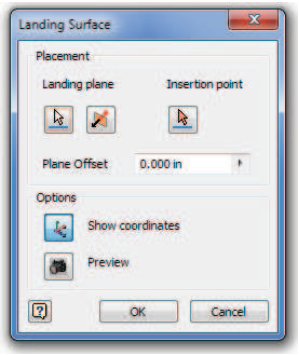

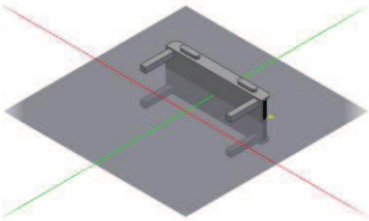

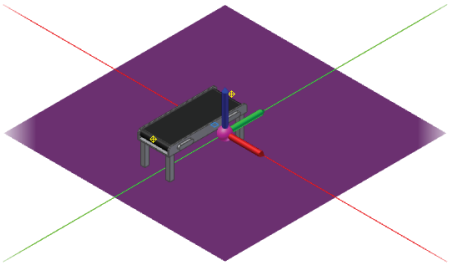

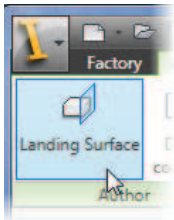	The Landing Surface tool is the first Icon of the Asset Builder ribbon.
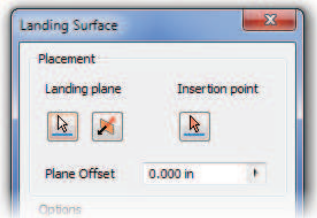	The Placement section of the Landing surface dialog box helps define the position and direction of the landing plane.
	Click this button to select the landing plane in the model. You can select a planar face, a work plane, or a 3D sketch plane.
	Click the Flip direction button to flip the positive side of the current landing plane.
	Click the Insertion point button to select one or more insertion points for the model. You can select a vertex, work point, or sketch point.
Plane Offset 0.000 in	Enter a value to place an offset for the landing plane.

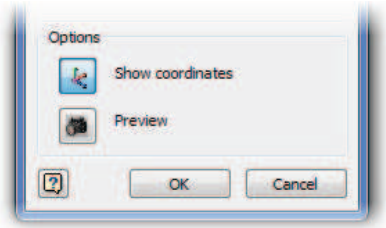	The Options section of the Landing Surface dialog box provides options for visual feedback for the landing surface.
	Click the Show coordinates button to display or hide the coordinate system.
	Click the Preview button to view a preview of the landing surface.

Asset Creation - Defining Connector Points

Connectors can be used to help assemble components on the factory floor. Connectors allow snapping between specific points on each component and aligning them based on the axes of the connector points.

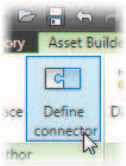	The Define Connector tool is located on the Author panel of the Asset Builder.
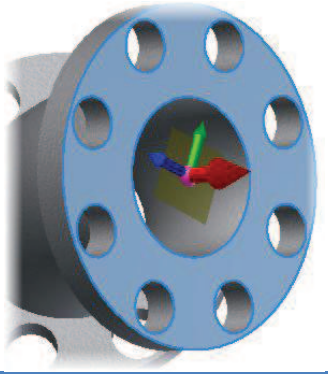	Connector Points may be created on the following: • A planar face • A vertex • A midpoint • An endpoint • A hole center A work point • A work plane
After you select the Connector location, the connector point triad appears at the point you selected. 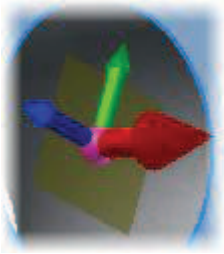	• The red axis on the triad represents the X direction for the object as seen from the plan view (Looking down from the top). This is the direction in which the connection is to be made. • The green axis indicates the side of the connection • The blue axis indicated the top, or “up”, side of the connection. • The origin ball of the triad may be selected and moved to a different location.

Exercise: Create Asset Landing Surface and Connector Points.

In this exercise, you begin the process of authoring a factory asset. You will import an existing Inventor model and define a Landing Surface, Insertion points, and Connector points.

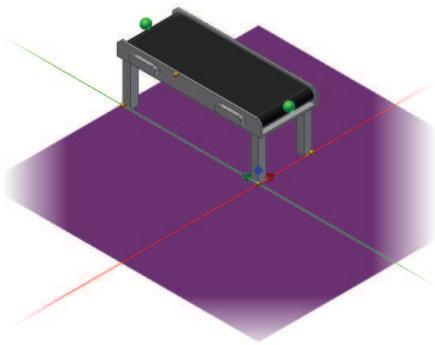

The Completed Exercise

1. Close all Inventor Files.
   - On the Getting Started ribbon, click the Create Asset > Import Model tool.

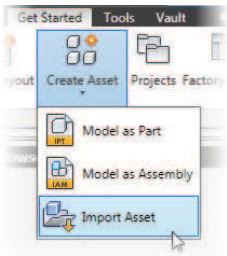

   - In the Import Asset dialog, select the **AFDS_006_Conveyor_Straight.ipt** part file.
   - Click Open.

2. On the Factory ribbon, click the Asset Builder tool.

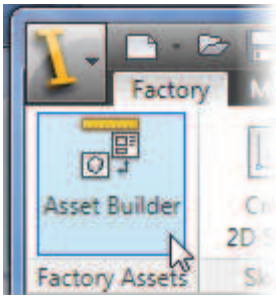

3. Define the Landing Surface.
   - On the Asset Builder ribbon, Click the **Set Landing Surface** tool.

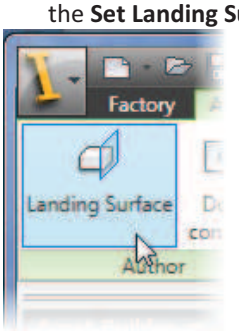

   - Select the planar face as shown in the following image as the landing surface.

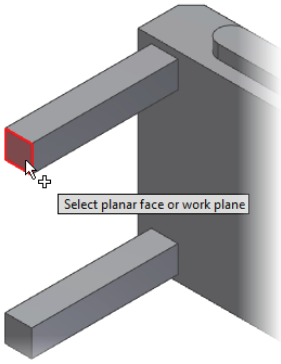

   - In the Landing Surface dialog box, click the Insertion Point selector and select the 4 bottom outside corners of the conveyor legs.

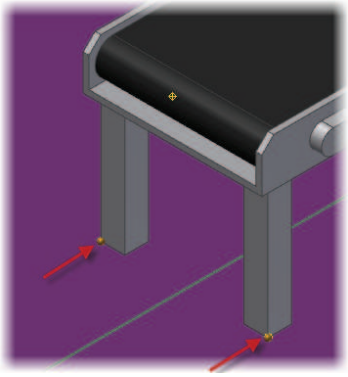

   - Click **OK**.

4. Define the Connector Points
   - On the Author panel, start the **Define Connector** tool.

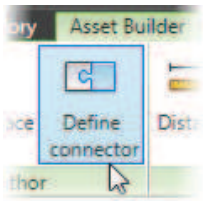

   - Click the work point at the top end of the conveyor as shown in the following image.

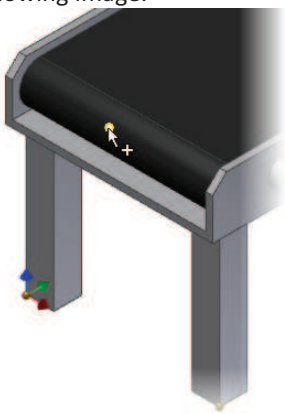

   - To define the X direction of the connector, click the red arrow of the triad.

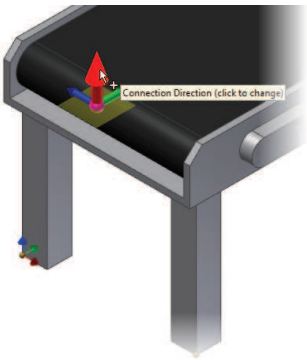

   - Select the left end face of the conveyor channel.

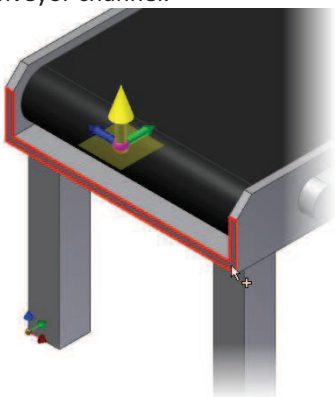

   - To define the Z direction (UP) select the Blue axis of the triad.

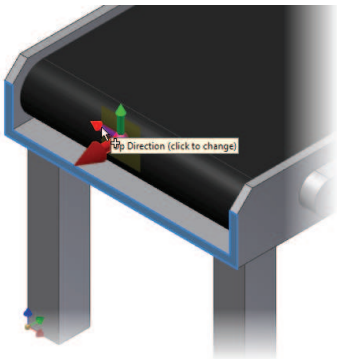

   - Select the top face of the belt as shown in the following image.

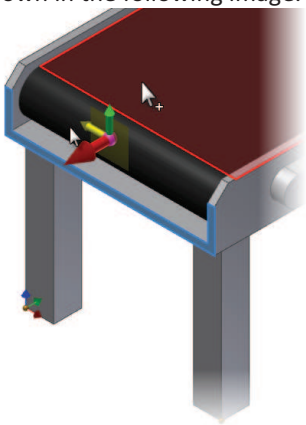

   - Right Click and select **OK** from the menu.

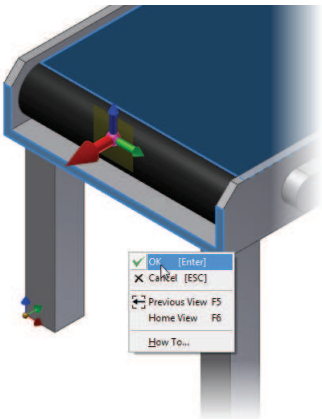

   - The Green sphere indicates the connector point.

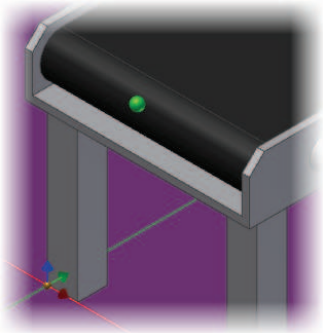

5. Define the opposite Connector Point.
   - Repeat the Connector Point process to define the connector point at the opposite end of the conveyor.
     Note: If the Blue Z (UP) axis points down after selection a vertical edge, select it again and use another vertical edge.

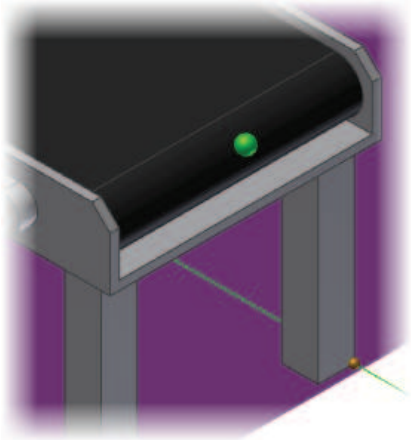

   - Click the Finish Asset Builder tool and Save the file.

End of Exercise

NOTE: Please save the file for future use.

Lesson: Defining Key Parameters.

Various parameters can be created during the model creation process. Only specific parameters, marked as Key parameters are available for edit during asset placement. The Properties Browser becomes populated with component Model and Miscellaneous parameter data when a parameterized component is selected in the Factory Layout assembly. Named model parameters that have been specified as Key Parameters within a component and miscellaneous parameters representing specific iProperty parameters can be modified.

Note: Parameters can be marked as Key at any point in the modeling process.

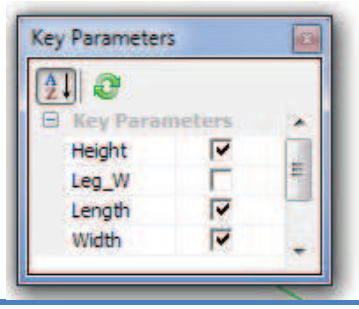	In the Asset Builder environment, the Key Parameters browser is displayed. The Key Parameters Browser displays all named parameters. Check marks are placed by parameters that will be available for modification when the asset is selected in the factory layout.
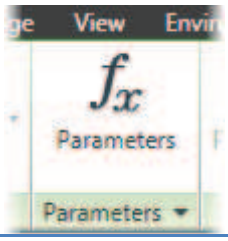	The Parameters command on the Asset Builder ribbon provides access to the model parameter table.
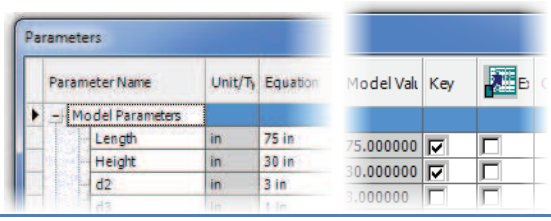	Parameters in the table can be marked as key by placing a check mark in the Key column.

Lesson: Publishing Assets

Publishing the asset adds the model to the User Assets Folder of the Factory Asset library. Once an asset is published it can be inserted from the Asset Browser into the factory layout.

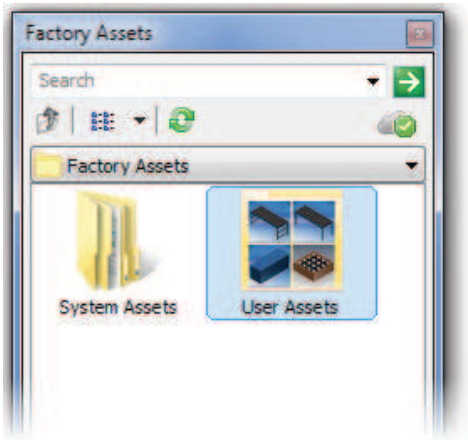

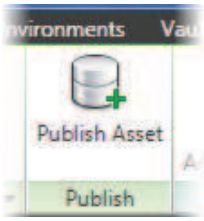	The Publish Asset tool is located on the Asset Builder ribbon. This command launches the Publish Asset dialog. **Note**: A model or assembly cannot be published if it has a pending save.
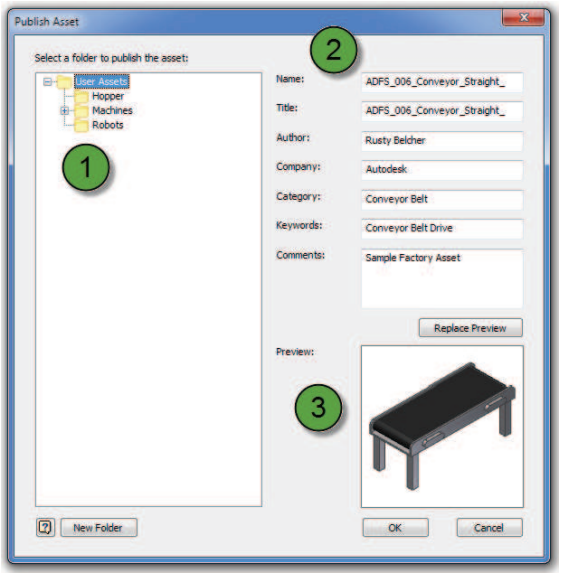	1. The upper left portion of the Publish Asset dialog allows the designer to select an existing destination folder from the tree list or create a new sub-folder. 2. Specific iProperty values are available to modify in the upper right portion of the Publish Asset dialog. 3. The Preview portion of the Publish Asset dialog allows the designer to view the icon that will represent the asset in the Asset Browser. The Replace Preview button allows users to substitute the automatic image with another image file. **Note**: Supported Image Files include .PNG, .BMP, and .JPG.

Exercise: Select Key Parameters and Publish Asset

In this exercise, you verify that the desired parameters are marked as Key and then publish the conveyor asset to the Factory Asset library.

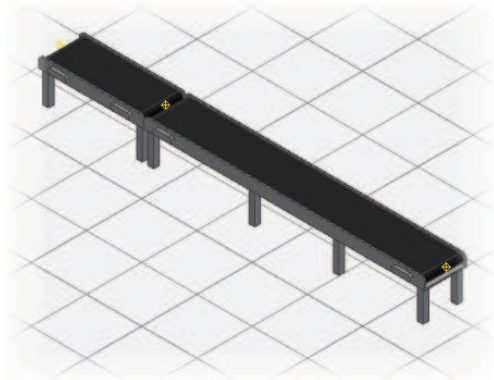

The Completed Exercise

1. Continue using the file from the previous exercise or open the exercise file **AFDS_006_Conveyor_Straight_.ipt.**
   - If necessary, click the Asset Builder tool to activate the Asset Builder environment.

2. Review the Key Parameters
   - Review the contents of the Key Parameters browser.
   - Notice the available parameters. All Named parameters are listed in the Key Parameters dialog.
   - Place a check mark beside the following parameters.

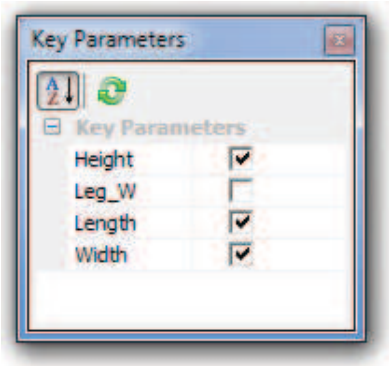

3. Publish the Asset.
   - On the Asset Builder ribbon, start the **Publish Asset** tool.

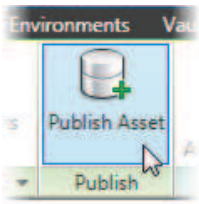

   - In the Publish Asset Dialog, select the User Assets folder as shown in the following image.

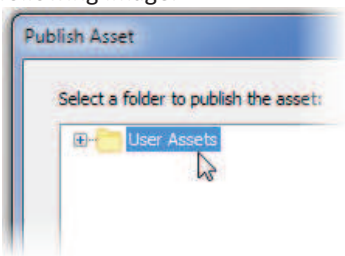

   - Fill out the iProperty information similar the following image.

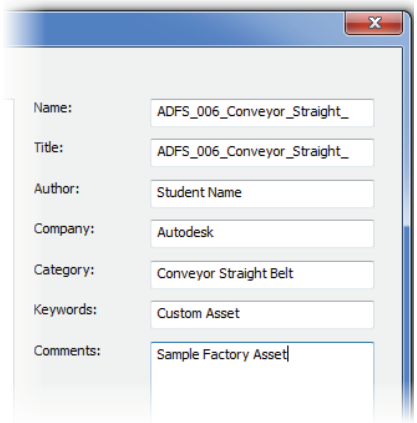

   - Click **OK** to Publish the Asset.
   - Close the file without saving.

4. Locate the Published Asset in the Asset Browser.
   - Start a new Factory Layout.
   - Click Refresh on the Asset Browser.
   - In the Search window type AFDS and click the search button.

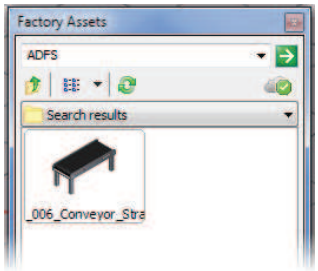

5. Test the Factory Asset.
   - Place the new asset on the factory floor.
   - Place a second instance of the asset and connect it to the first.
   - Select one of the assets and modify the Length parameter in the Factory Properties browser. Change the Length value to **200**.
   - Click the Update button on the Factory Properties browser.
   - Close all files without saving.

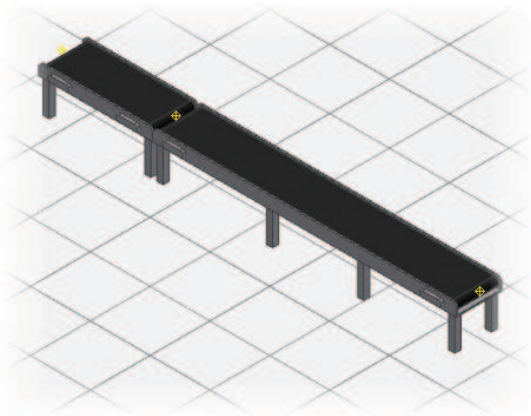

End of Exercise

Challenge Exercise

Using the processes described in this chapter, complete the Asset Authoring process for the Curved Belt Conveyor.

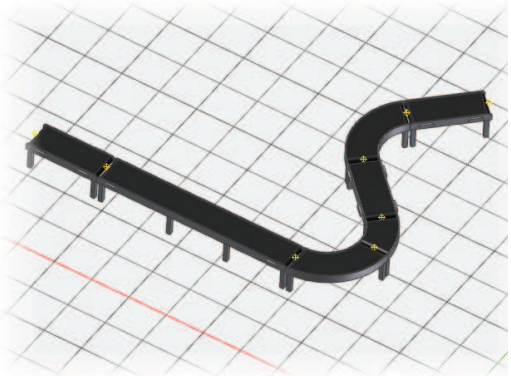

The Completed Exercise

1. Open the exercise file *AFDS_007_Conveyor_Curved.ipt*
2. Using the processes from the previous exercises, Author and Publish the Curved Conveyor Asset.

3. Hints for this exercise.
   - Define the Landing surface
   - Use the supplied work points to define the connectors.
   - Make sure to mark the Key Parameters as shown in the following image.

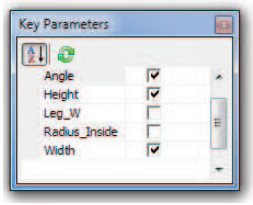

   - Publish the Asset to the User Asset Folder.
   - Start a new Layout and test the both assets created in this chapter.

Chapter Summary

This chapter presented the tools and recommended workflows for asset authoring and publishing. Using these techniques, you can now create factory assets and publish them to the factory asset library.

Having completed this chapter, you can:

- Use the Asset Builder to Create Factory assets.
- Establish a Landing Surface for a new factory assets.
- Establish Connection Points for new factory assets.
- Identify Key Parameters for use during factory asset placement.
- Publish Assets to a custom user library.
- Test new Factory Assets.

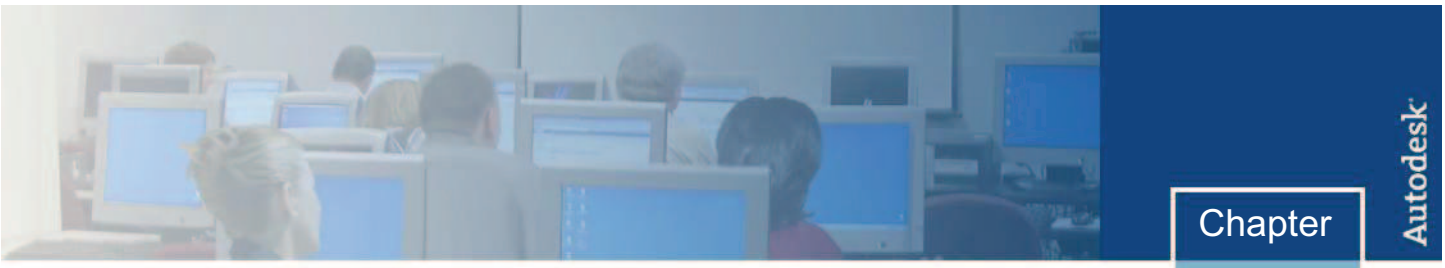

Chapter

11

Workflow and Best Practices

Designing a complete factory layout with all architectural elements and thousands for factory assets is quite a lot for a single computer program to handle. Autodesk Factory Design Suite allows factory designers and system integrators to work with factory that are beyond the capability of most computer applications. In order to work with so many components efficiently, it is important to understand the Project settings, Workflows, and Best Practices for using the Autodesk Factory Design Suite.

Objectives

After completing this chapter, you will be able to:

- Create a Project file for a typical factory design.
- Understand the supporting file directories for Autodesk Factory Design Suite.
- Understand the Best Practice for dividing a factory design into sub-layout.
- Understand the Best Practice for modeling a Simplified form for factory assets.

Lesson: Using Project Files for Factory Design.

This lesson describes the characteristics and implementation of Autodesk Inventor project files. You use project files to resolve path locations. When an assembly file is loaded, the location of the part files must be resolved. The same is true when loading a drawing or presentation file.

It is important to understand how Autodesk Inventor accesses and stored files used to design the factory layout. It is also important to develop and utilize libraries of custom data to support the common components to all designs. This section will outline the process of creating an Inventor project file for factory design. It will also explore the supporting directories used by the project file.

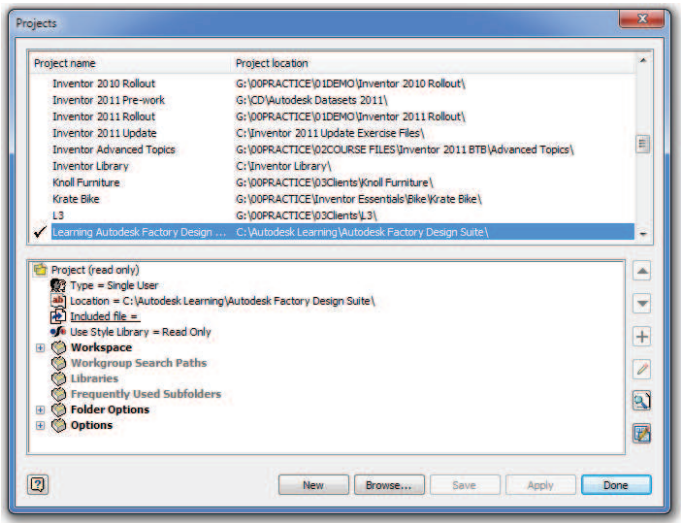

Objectives

After completing this lesson, you will be able to:

- Create an Inventor Project file for factory layout design.
- Understand the supporting settings and directories used by the project file and the application.

About Project Files

Before you start any layout, you will want to create a project for your parts/layouts to be saved in. This will help you to keep your files organized, and help prevent incorrectly saving over your parts with modifications for another project. Not only will each project be able to help you clarify what job you are working on, but models provided from different vendors, or created for a specific line, can be placed in libraries specific for each project.

If you are a veteran Inventor user, you will notice that the typical Inventor project practices are used to work for factory layouts. The Autodesk Factory Utilities provide additional options for the following.

- Asset Creation Templates
- Factory Asset Library Location
- Factory Asset Storage Directories

File Relationships

When you use Autodesk Inventor software to create designs, each one consists of multiple files and file types. The design and documentation of a single part file require at least two separate files: (a) a part file and (b) a drawing file. The design and documentation of assembly models require a minimum of three different file types: (a) assembly files, (b) part files, and (c) drawing files.

Using separate files for each file type is critical for performance and is common among most parametric modeling systems. By storing path information for each project, the application can search for the required files when opening an assembly, presentation, or drawing file. The need to search in different path locations for files is the primary purpose of project files.

The following illustration shows file dependencies in a typical assembly design.

1. Assemblies reference parts.
2. Drawings reference parts.
3. Drawings reference assemblies.
4. Drawings reference presentations.
5. Presentations reference assemblies.

When you open an assembly, drawing, or presentation file, the active project file is used to resolve path locations to the referenced files.

Definition of Project Files

A project file is an ASCII text file that is stored with an **.ipj* file extension. The file contains information about paths and other options that enable Inventor to resolve the file references of other files when you open an assembly, presentation, or drawing file.

When you create designs you probably organize them in different folder locations. The same is true for Autodesk Inventor project files. You generally create one project file for each design you create. While there is no limit to the number of project files you can create, only one project can be active at a time.

In the following illustration, the active project is identified by the check mark.

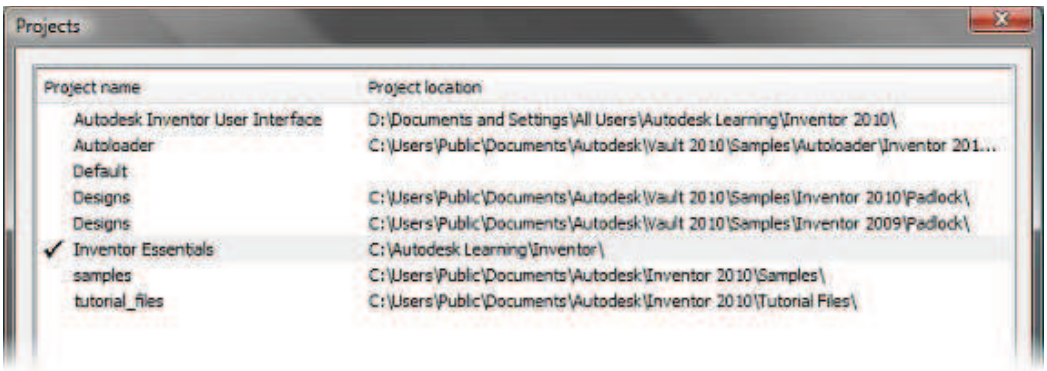

Example of a Project File

It is recommended that you store your project file in the upper level folder of your project design folders. This keeps your project file organized with your designs and simplifies portability issues.

The following illustration shows the folder structure for a project and where the project file is located.

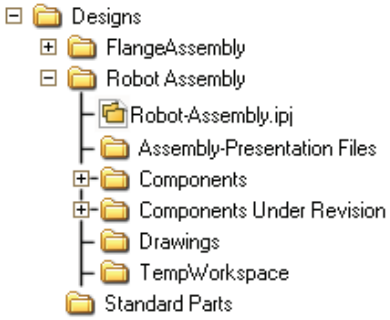

A typical project might have assets and assemblies unique to the project, standard assets unique to your company, and purchased components such as fixtures, fittings, or electrical components.

To reduce the possibility of file resolution problems, set up a folder structure before you create a project and start saving files. To help organize your design files, it is a good idea to set up subfolders under your project workspace or workgroup folder. You can keep all your design files for a project in the subfolders, making it a logical way to organize the files used in a design project. Because references are stored as relative paths from project folders, if you change the folder structure, move, or rename files, you are likely to break file references.

Always save new files in the workspace or workgroup defined for your project or one of its subfolders.

Projects Folder Option

Because you can store your project files in several different locations, you need an efficient way of locating them. Rather than search every folder on your computer or network, Autodesk Inventor uses Microsoft Windows shortcuts to point to the project files that have been accessed on your computer.

Click Tools tab > Application Options, then click the Files tab in the Application Options dialog box. The default Projects Folder option is set to your Documents\Inventor folder. If you want to use a different path for your project files, enter or browse to a new location.

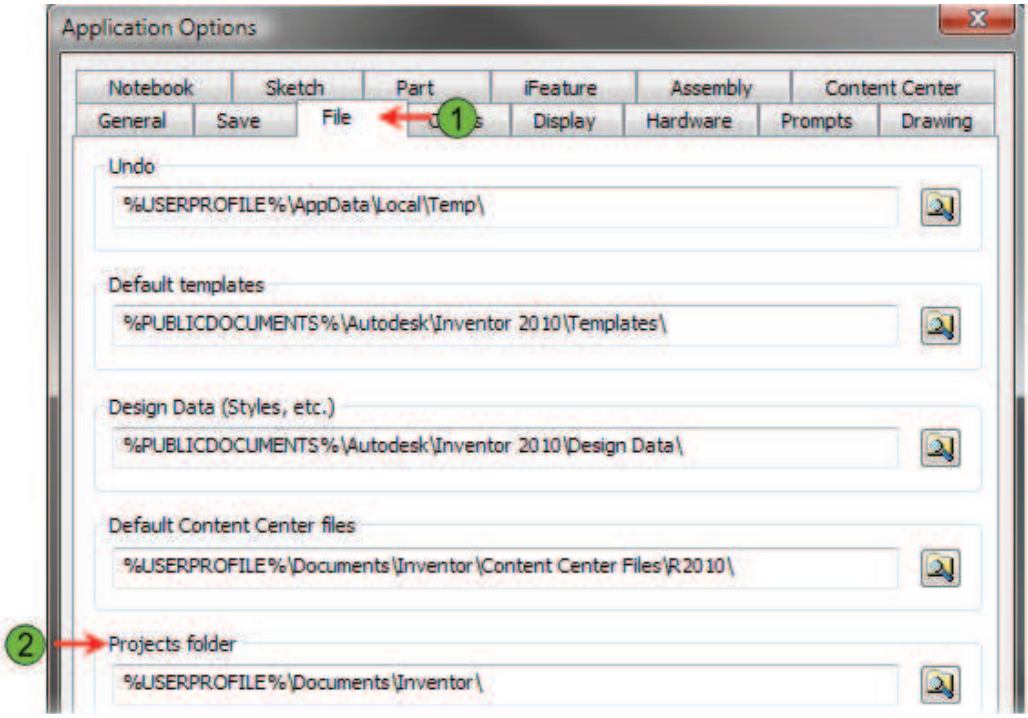

In the following illustration, the *Documents\Inventor* folder is selected to list all files. The Project file shortcuts in the right pane of the Explorer window are not the actual project files. They are Microsoft Windows shortcuts to the actual project files.

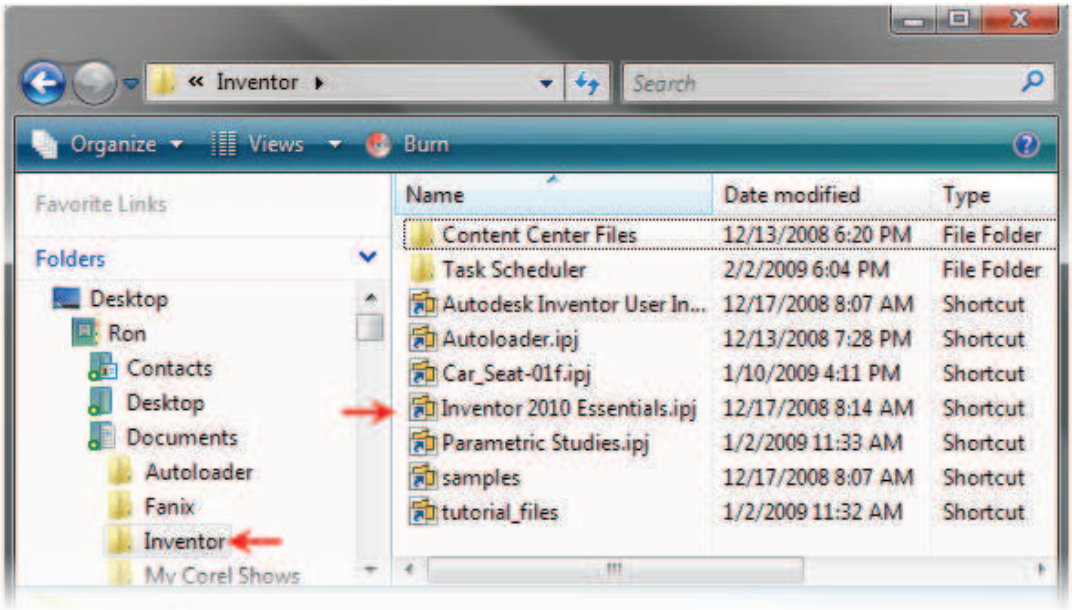

Project File Configuration

Each project file contains a series of categories and options. To successfully design a project file, you must understand how to use these categories and options, to ensure proper file referencing when you design assemblies.

Projects Dialog Box

You use the Projects dialog box to create, edit, or set a project file to current. The dialog box is divided into two panes. The top pane lists the currently available projects, while the lower pane shows the settings and configured options for the selected project.

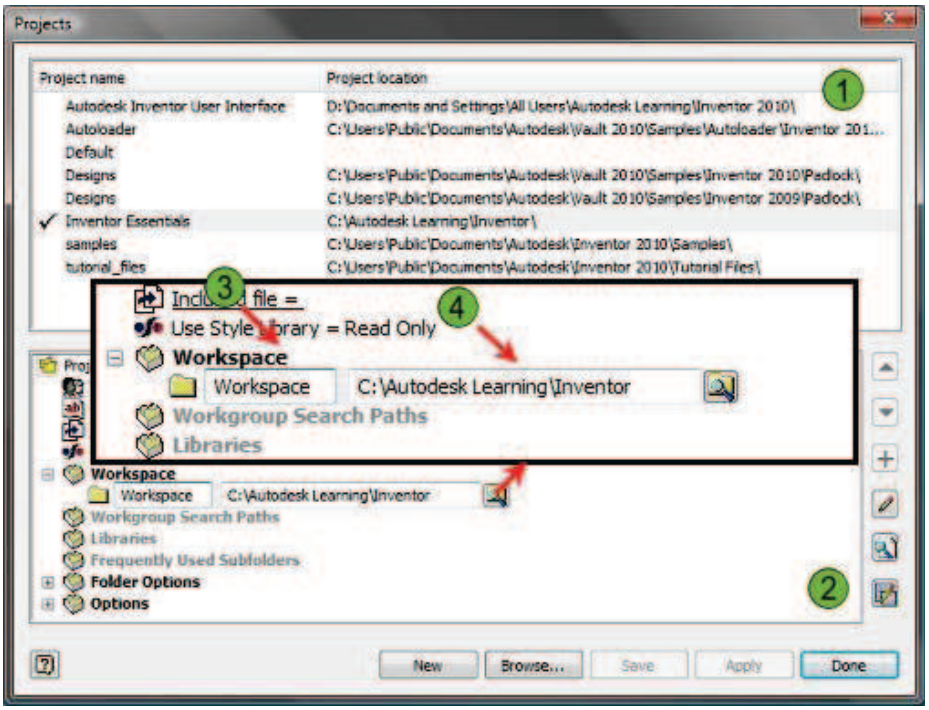

	Option	Description
1	**Select Project Pane**	Select a project to edit it, or double-click a project to make it active. **Note:** You cannot edit the active project or activate a different project if there are files open in Autodesk Inventor.
2	**Edit Project Pane**	Select the category or right-click the option you want to change. When you edit search paths they are divided into two sections: (a) Named Shortcut and (b) Category Search Path.
3	**Named Shortcut**	Enter the shortcut name as you would like it to appear in the Open dialog box. This enables you to navigate easily to the search path.
4	**Category Search Path**	Enter the path name or click the browse button to define the path location.

Open Dialog Box: Location Shortcuts

When you open files, the Locations area of the dialog box displays all of the named shortcuts contained in the active project.

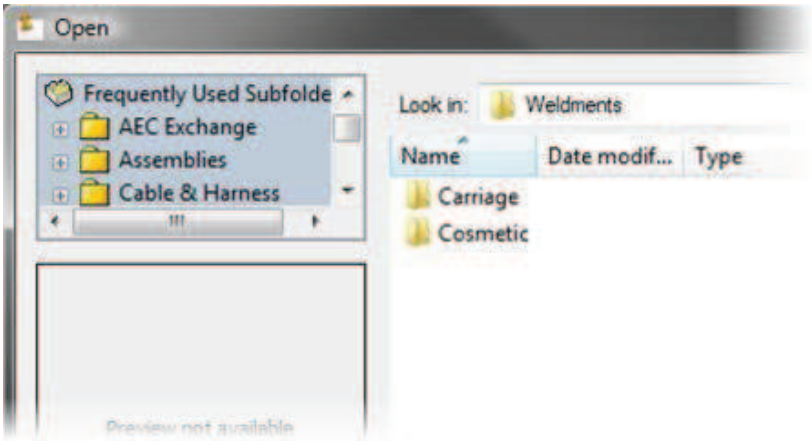

Project File Categories

Each project file is divided into separate categories in which you define different paths. A typical design makes use of some or all of these categories depending on the structure of your assembly and the environment in which you are working.

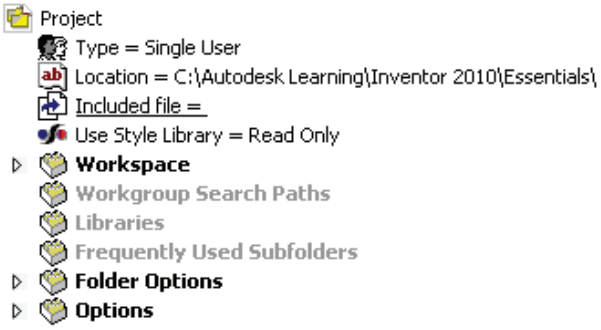

Category	Description
Type	Defines the type of project. Unless you also have Autodesk Vault installed, you only create single-user project files.
Location	Displays the physical location of the project file.
Use Style Libraries	Defines whether or not the project uses a style library. Options are Yes, Read Only, and No.

Category	Description
Workspace	A personal location where you edit your personal copy of design files. Only one designer should have access to the files in the folder called out in the workspace.
Workgroup Search Paths	Within this group you can define multiple search paths for accessing files. You do this when you want to add levels of organization to your design files or access files from another designer.
Libraries	You use this category to define search paths for part libraries. Part libraries can consist of standard off-the-shelf components that you use in your designs or can also include common parts that you design. Common factors in all libraries include that the path is considered by the application to be read-only, and parts stored within a library search path rarely, if ever, change. If library folders are defined, each needs a descriptive name that should not change. Because the library name is stored in the reference, changing the library name later breaks library references.
Frequently Used Subfolders	This group is used to define paths of frequently used subfolders within the project folder structure.
Folder Options	This group contains options for setting the folder locations of style libraries, templates, and Content Center files.
Options	You use these properties to set specific options for the project file.

Project Categories: Search Order

Knowing and remembering the category search order is critical to properly implementing and managing project files. The following illustration represents a typical project file with path locations defined in each category. When the application needs to locate referenced files, it searches for files using paths contained in each category using the following order.

1. Libraries
2. Workspace
3. Workgroup Search Paths

A simple way to remember the search order is to remember libraries first, and then the order that each category is displayed in the project window.

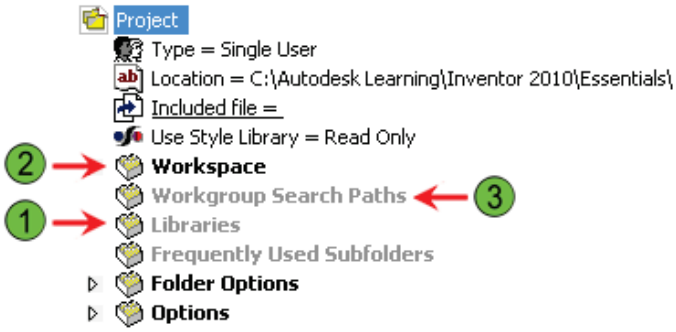

Relative Paths in Your Project Files

When you add paths to each category, the application stores only the relative path. The relative path is created by removing the project file location from the path text and leaving only the remaining path information. Using relative paths enables greater portability of your project files and data sets. When you view the paths under each category, the path settings begin with . followed by the folder location relative to the physical location of the project file. In the following example, the *Robot-Assembly.ipj* file is stored in the folder *C:\Designs\Robot Assembly*.

By storing only relative paths in your project file, it is possible to physically move the entire folder structure to another location or storage device. As long as the folders maintain their relative location to the storage location of the project file, the application can resolve the files as required.

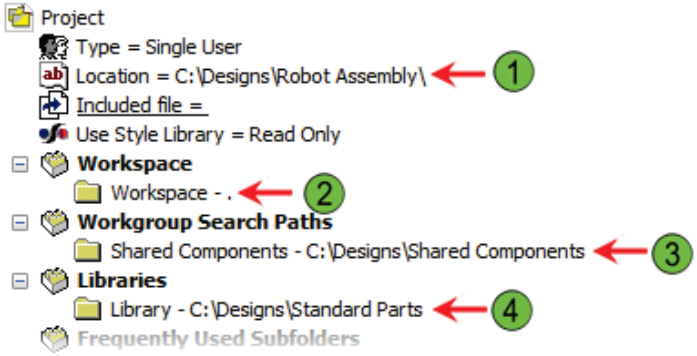

1. Location of project file
2. Relative path
3. Full path
4. Full path

Project File Folder Options

Folder options identify where project level files such as templates and styles are stored.

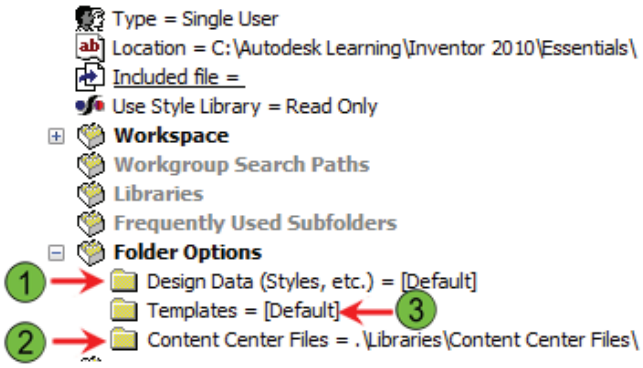

Option	Description
Design Data	Identifies where the project-specific style definitions are stored.
Templates	Specifies the location of the Autodesk Inventor document templates for the project.
Content Center Files	Specifies the location of the Content Center files used in the project.

Project Options

The following options can be set for each project.

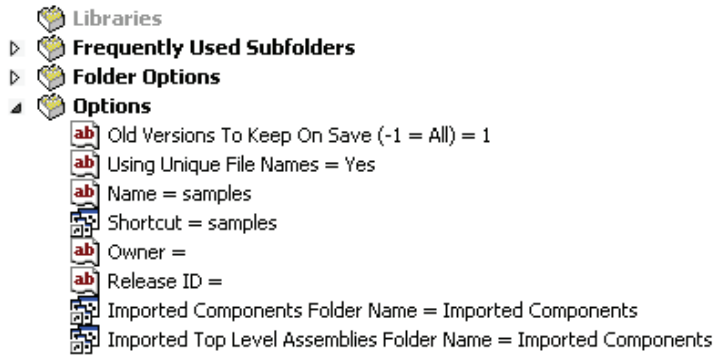

Option	Description
Old Versions to Keep on Save	Specifies the number of versions to keep when you save changes. Older versions of each file are stored in an Old Versions subfolder of the file location.
Using Unique File Names	Specifies whether all files in the project have unique file names. Not applicable for library locations. **Yes:** Indicates that no duplicate file names are used in the project. The application searches through all editable project locations to find the file name, even if it was last accessed from a different folder. **No:** Indicates that duplicate file names exist in the project. If duplicate file names are found when resolving files, the Resolve Files dialog box opens so you can browse to the correct file to manually reestablish the link.
Name	Indicates the name of the project file.
Shortcut	Indicates the name of the project file shortcut.
Owner	Identifies the project owner, typically the lead engineer or CAD administrator.
Release ID	Identifies the version of the released project data. If a project is used as a library by another project, the release ID may be useful in identifying which project to use.
Imported Components Folder Name	Identifies the name of the folder where imported components are stored.
Imported Top Level Assemblies Folder Name	Identifies the name of the folder where imported top level assembly data is stored.

Creating a Project File

You begin to create project files through a wizard. You are prompted to fill in relevant information such as project name, workspace folder, and libraries to import from other projects. After the initial creation is complete, you proceed to add the required paths to the categories you will use.

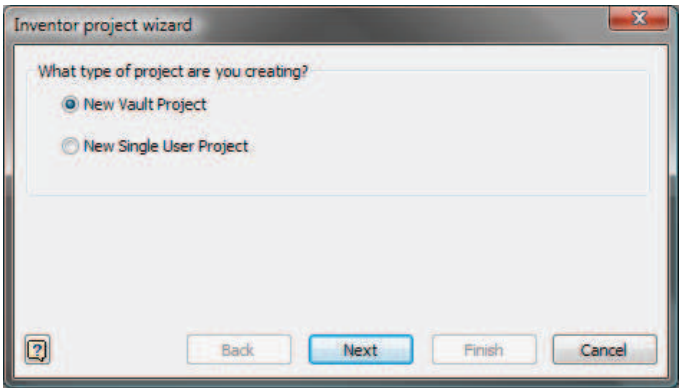

Access

Create or Edit Projects

Ribbon: **Get Started tab > Launch panel**

Open or New Dialog Boxes: **Projects**

Procedure: Creating a Single-User Project File

The following steps describe how to create a single-user project.

1. Access the Projects dialog box by clicking File menu > Projects.
2. Select the New Single User Project type and click Next.

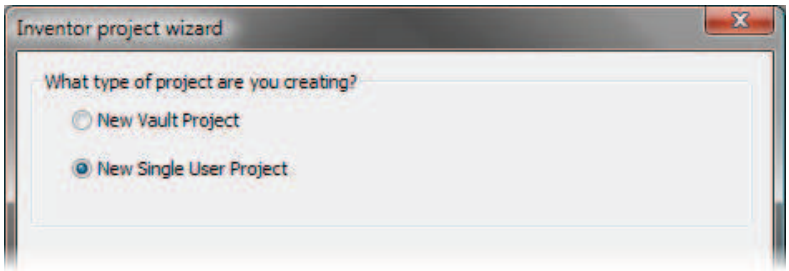

3. In the Name field, enter a name for the project. In the Project (Workspace) Folder field, enter a path location for storing the files for this project. Click Next.

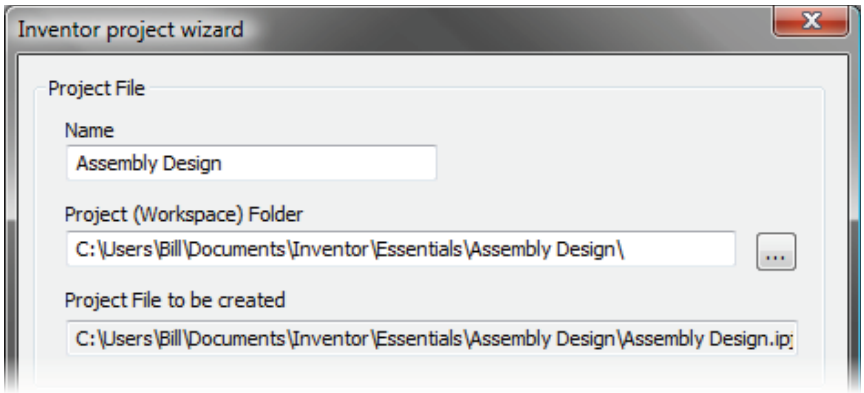

4. If you have any projects with libraries defined, they are displayed in this list. You can use this information to copy library paths from other project files.
   - Click Finish to create the project.
   - If you are prompted to create the path, click OK.

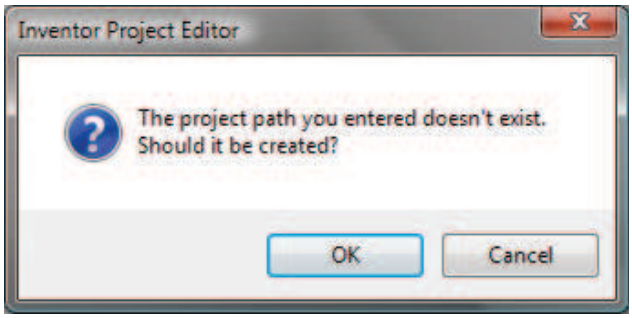

Lesson: Factory Templates

It is important for you to define which templates you want to use as defaults when starting a new project. This will keep you from accidently working in different unit systems when working with multiple vendors. The Factory Design Utilities determine the default template for asset creation in the Factory Options dialog.

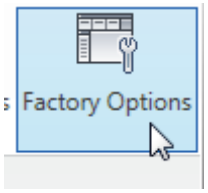	You access the Factory Options on the Getting Started ribbon and the Factory ribbon.
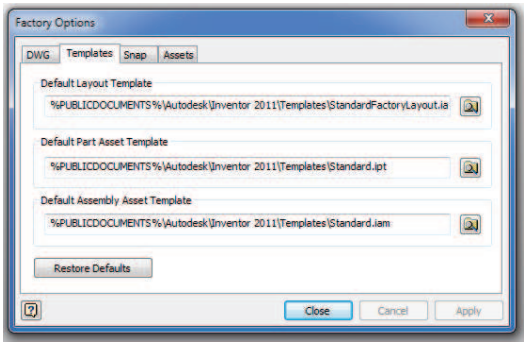	The **Default Layout Temple** setting determines the default assembly template used to create new factory layouts. **Note**: A factory layout template is different than a typical Inventor Assembly template. Special settings and parameters are in place to support factory layout processes.
	The **Default Part Asset Template** setting determines the default part template used to create new factory assets. **Note**: The default setting uses a typical Inventor part template.
	The **Default Assembly Asset Template** setting determines the default assembly template used to create new factory assets. **Note**: The default setting uses a typical Inventor assembly template.

Lesson: Supporting Directories

Each time a factory asset is added from the Asset Browser, an independent instance of it is created in the local workspace. A Factory Asset directory is added to the local workspace when the first asset is placed into the factory layout. All factory assets placed from the Asset Browser are stored in this location. Each asset is stored in a unique sub folder with a unique file name.

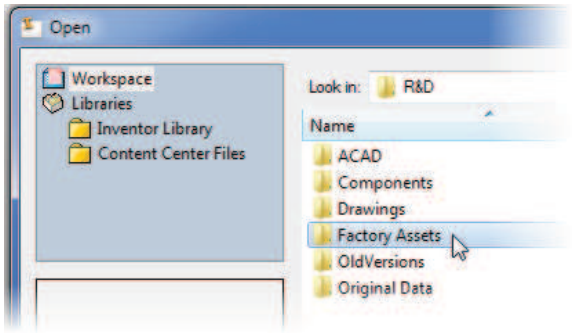

Supporting Library Directories

The supporting System Asset Library that ships with Autodesk Factory Design Suite is stored in the following location.

C:\Program Files\Autodesk\Inventor 2011

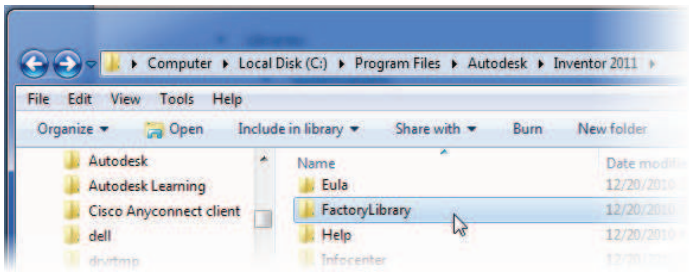

Supporting User Library Directories

The supporting User Asset Library for Autodesk Factory Design Suite is stored in the following location.

C:\Users\username\Documents\Factory Library

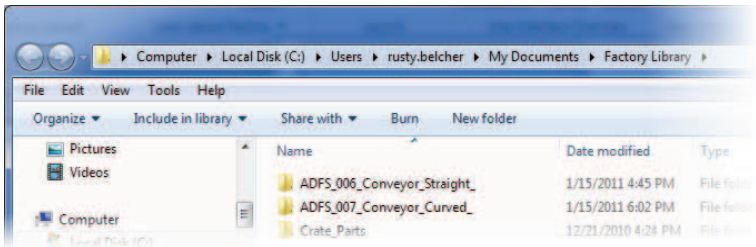

Exercise: Project File and Supporting Directories

In this exercise, you create an Inventor Project file and review the supporting directories used by Autodesk Factory Design Suite.

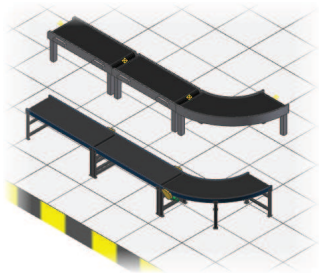

The Completed Exercise

1. Create the Workspace.
   - In Windows, create a directory called C:\R&D.
     Note: In this example, this directory will be used as the Workspace.

2. Create the Project File.
   - In Inventor, make sure all files are closed.
   - Click the **Projects** Tool on the Getting started ribbon.

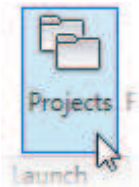

   - On the Projects Dialog, click the New Button.

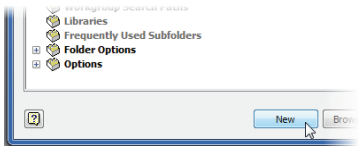

   - In the Inventor Project Wizard, select the New Single User Option.

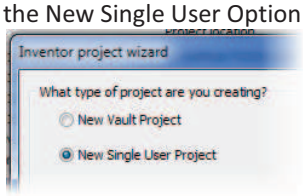

   - Click **Next**

   - In the Inventor Project Wizard enter **R&D** as the name of the new Project.

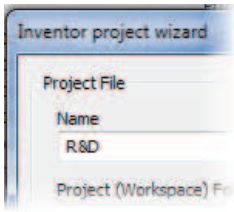

   - Set the Project Workspace by clicking the button and navigating to the directory created in the first step.

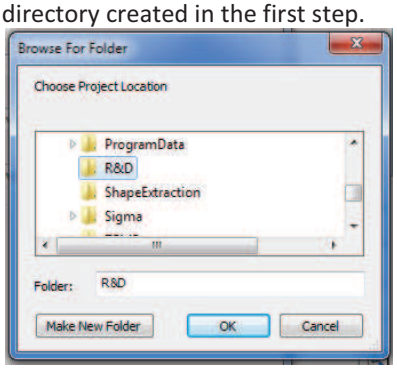

   - Select the Workspace directory and click **OK**.
   - In the Inventor Project Wizard dialog, Click **Finish**

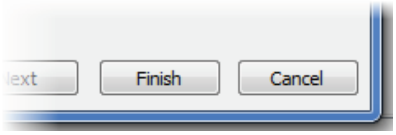

3. Set your active Project File
   - In the Projects Dialog, double click the R&D Project File listed in the upper pane.
     Note: The check mark denotes the active project file.

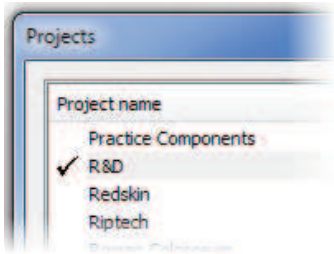

   - Click **Done**.

4. Create and Save New Layout.
   - Create a New Layout.
   - Save the Layout in the default workspace. During the Save operation notice that the file is saved to the workspace by default.
     Note: Please note that there are no other directories located in the workspace at this time.

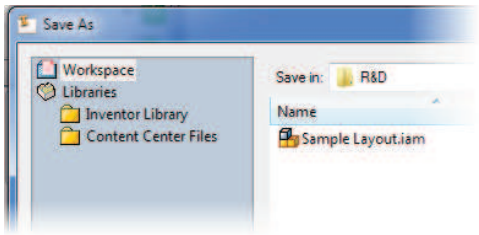

5. Add Several System Assets from the Asset Browser.
   - Using the System Assets create a small conveyor line as shown in the image below.

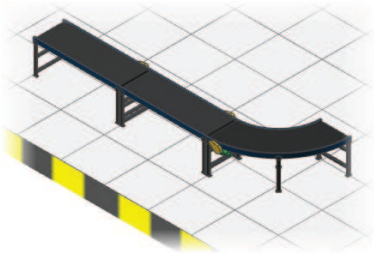

6. Add several User Assets from the Asset Browser.
   - Using the User Assets create a small conveyor line as shown in the following image.

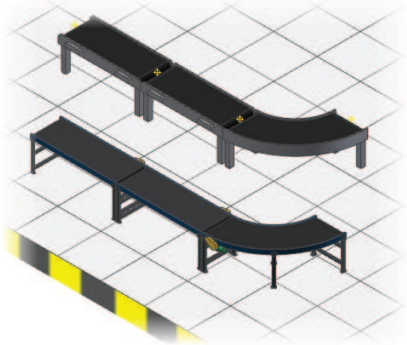

   - Save the File.

7. Review the location of assets placed in the factory layout.
   - Select a system asset.

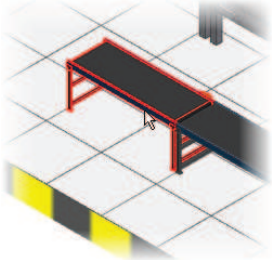

   - Right Click and select iProperties Notice the default storage location for assets placed on the factory floor.

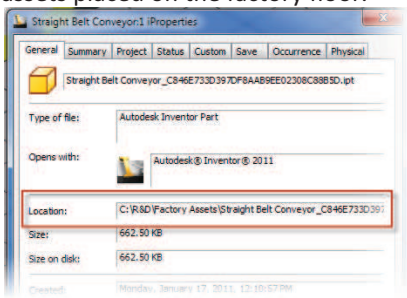

   - Close the iProperties dialog.

8. Review the contents of the Factory Asset folder in the Workspace.
   - Use the file open command and review the contents of the Factory Asset folder now located in the Workspace.
   - Close the File Open dialog without opening any files.

9. Review other supporting directories.
   - To easily navigate to the location of a system asset, Right Click on a system asset in the Asset Browser and click Explore from the menu. Notice the supporting directory for System Assets.
   - To easily navigate to the location of a user asset, Right click on a user asset in the Asset Browser and click Explore from the menu. Notice the supporting directory for the User Assets.

10. Copy custom assets to the User Asset Library.
    - Navigate to the Components folder in the AFDS_Training_Files directory.
    - Copy the AFDS_Sample_Assets folder.
    - Right Click on a User Asset in the Asset Browser and select explorer.
    - In Windows Explorer, navigate up one level to the Factory Library.
    - Paste the AFDS_Sample_Assets folder into the Factory Library folder.

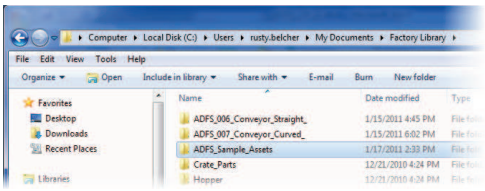

    - Close Windows Explorer.

11. Refresh the Asset Browser.
    - On the Asset Browser Click the Refresh tool.

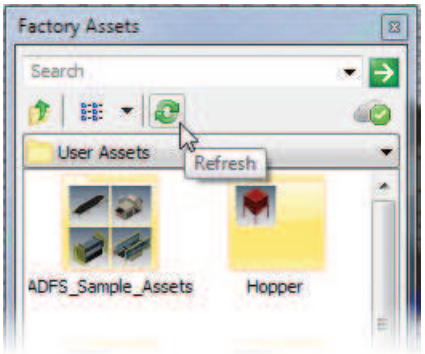

12. Review and Place some sample factory assets.
    - In the Asset Browser, navigate to the User Assets.
    - Review the new assets available in the directory.
    - Place several of the sample assets in combination with the conveyor assets placed earlier as demonstrated in the image to the right.

13. Reset the Project File.
    - Close all files.
    - Set the Active Project back to Learning Autodesk Factory Design Suite.

End of Exercise.

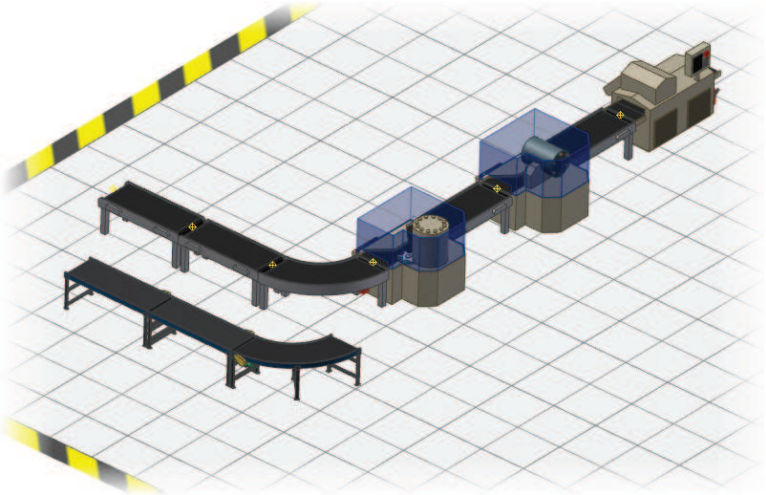

Lesson: Workflow – Divide and Conquer

Designing a complete factory layout with all architectural elements and thousands for factory assets is quite a lot for a single computer program to handle. Autodesk Factory Design Suite allows factory designers and system integrators to work with factory designs that are beyond the capability of most computer applications. In order to work with so many components efficiently, it is important to divide the layout into logical sections and reference each section back into the overall factory design.

There are various reasons to store your factory lines in separate files instead of a single layout. By dividing the lines into multiple assemblies, you increase your computer resource efficiency. Dividing the layouts also offers the ability to reuse the asset configuration in other factory layouts. This workflow allows multiple designers to work together on a single project. The final reason is very straight forward; factory layouts often require thousands of assets to make up the overall design. Loading all these assets into a single file will require more computer resources than are available in most computers.

For all these reasons, the best practice recommendation for handling large factory layouts is to break up the layout into logical spaces. Each space becomes a separate sub-assembly in the overall design.

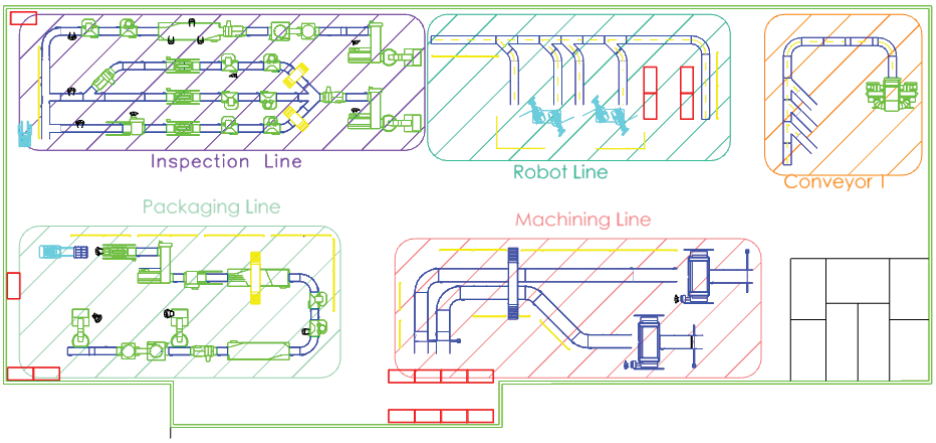

Objectives

After completing this lesson, you will be able to:

- Understand the basic process of dividing an entire Factory Layout into logical subassemblies.
- Place the subassemblies into the overall Factory Layout at the proper location.

Workflow – Divide and Conquer

A factory layout is normally divided into logical sections or subassemblies. Each section usually performs a specific task essential to the overall mission of the facility. Each section is created as a separate layout using the practices outlined in previous chapters. The layout subassemblies are then placed into the overall Factory Layout assembly.

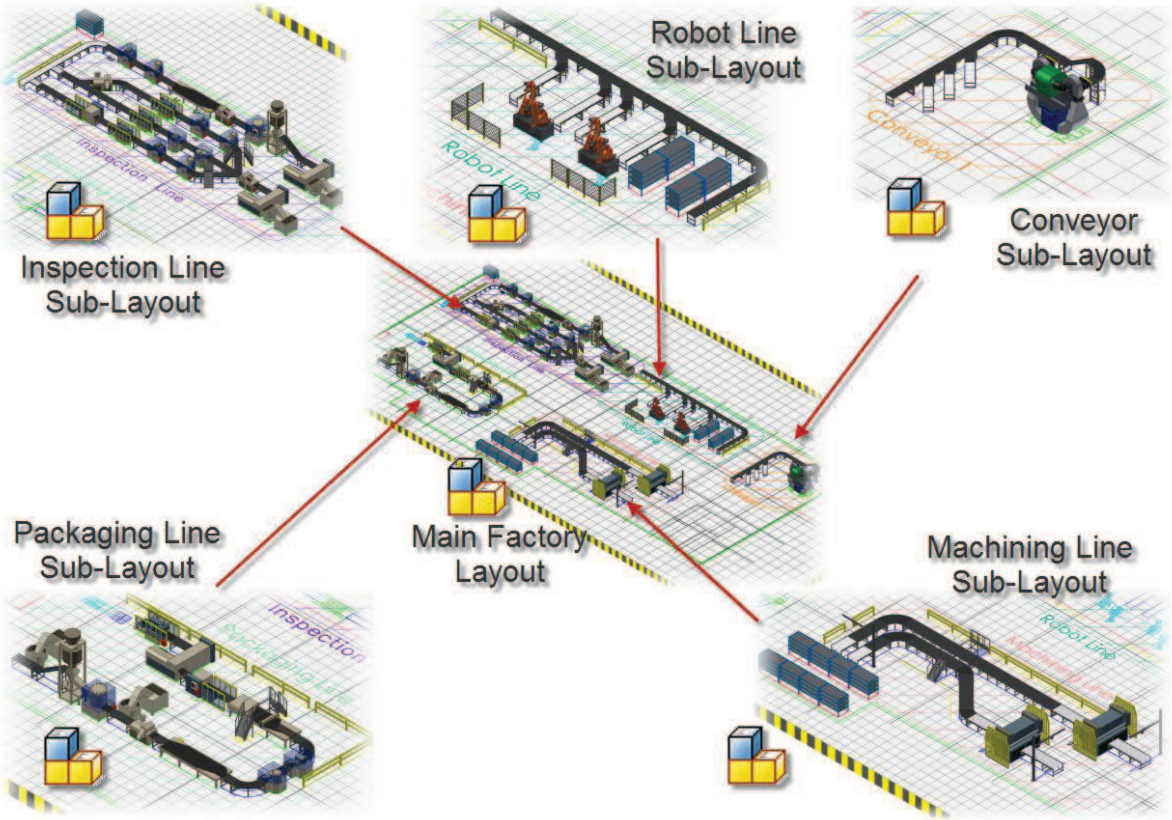

DWG Overlay – Common Reference Lines

The first step in creating a Sub-Layout is to place the DWG Overlay in the proper position. Each Layout will utilize the DWG Overlay of the overall facility. These reference lines are crucial to the placement of the factory lines in the final overall assembly.

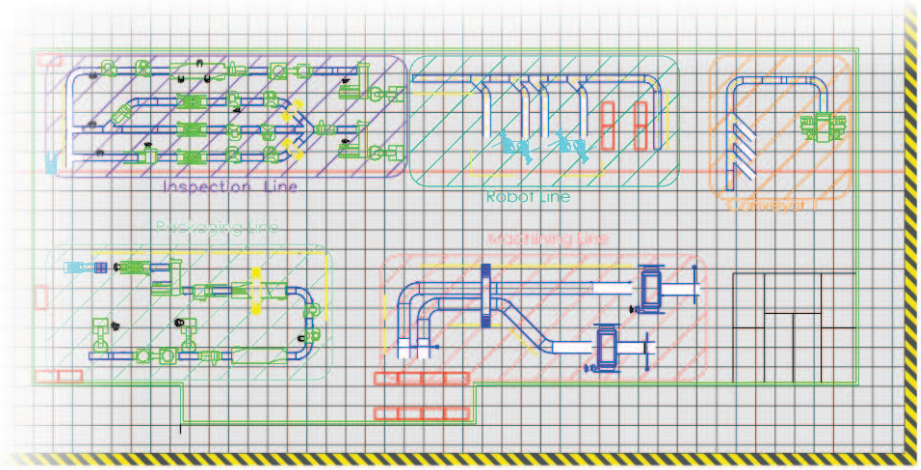

Placing Factory Line Sub-Layouts into the Final Factory Layout

The final factory layout will reference all the individual Factory Lines or Subassemblies. Each Sub-Layout is placed into the overall Factory Layout at the original coordinates established by the DWG Overlay.

The first Sub-Layout will report to it designed coordinated automatically but the following subassemblies will need to be moved into position manually. There are several simple methods of placing components into an assembly based on their design coordinates. The simplest is to set the occurrence location in the iProperties to 0 for the X, Y, and Z values.

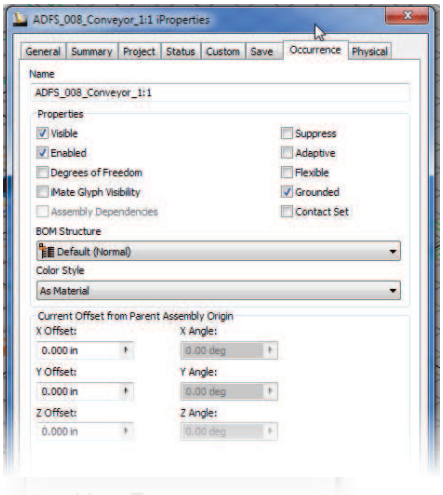

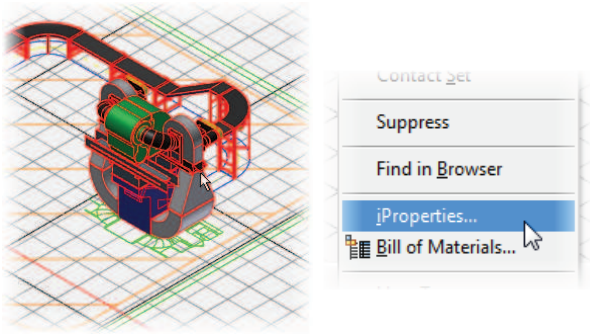	To access the iProperties for a part or assembly, select the desired component and Right Click. Select iProperties from the menu.
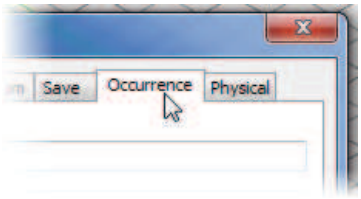	On the iProperties dialog, select the Occurrence tab.
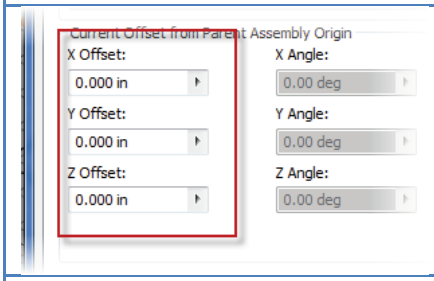	On the Occurrence Tab, Set the Values for X Offset, Y Offset, and Z Offset to 0 (Zero).
	Click Close to finish the process.

Exercise: Build the Main Factory Assembly

In this exercise, you create The main Factory Assembly and place the subassemblies for each factory line into the overall design.

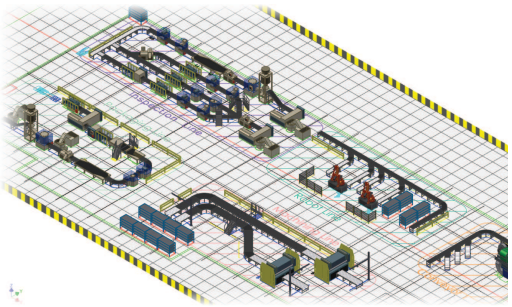

The Completed Exercise

1. Start a New Factory Layout.
   - Add the DWG Overlay **AFDS_008_2D_Factory.dwg**

2. Place the first Sub-Layout.
   - On the Assemble ribbon, click the Place Component tool.

   - Select **AFDS_008_Conveyor_1.iam**
   - Click Open
   - The first component in an assembly automatically reports to its original location
   - Right Click and select done from the menu.

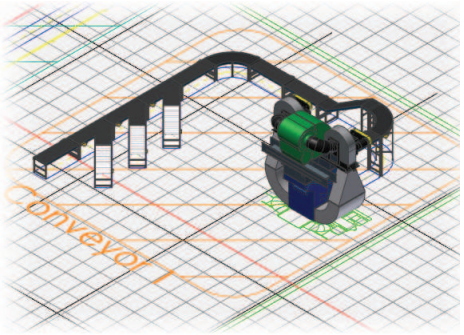

3. Place the Second Sub-Layout.
   - On the Assembly ribbon, click the Place Component tool.
   - Select **AFDS_008_Robot_Line.iam**
   - Click Open.
   - The second component placed into an assembly does NOT report to any location. Left Click to place the component anywhere.
   - Right Click and select **Done** from the menu.

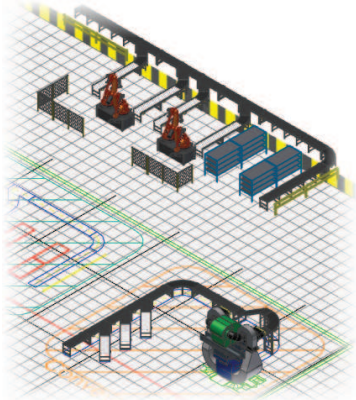

4. Set the location of the second Sub-Layout.
   - Right Click on the second Sub-Layout and select **iProperties** from the menu.

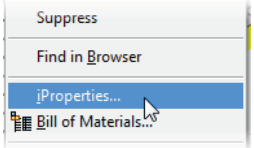

   - On the iProperties dialog, click the Occurrence Tab.
   - On the Occurrence Tab, set the values for X Offset, Y Offset, and Z Offset to **0** (Zero).

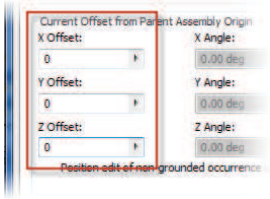

   - Click **OK**.

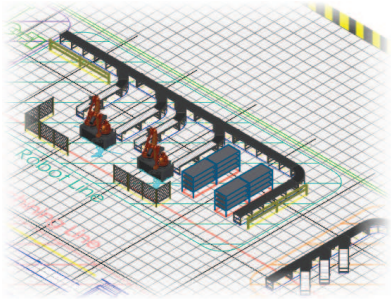

5. Place the remaining subassemblies.
   - Repeat the previous 2 steps for the following subassemblies.
   - **AFDS_008_Inspection_Line.iam**
   - **AFDS_008_Packaging_Line.iam**
   - **AFDS_008_Machining_Line.iam**

3. Close All Files without Saving.

   End of Exercise

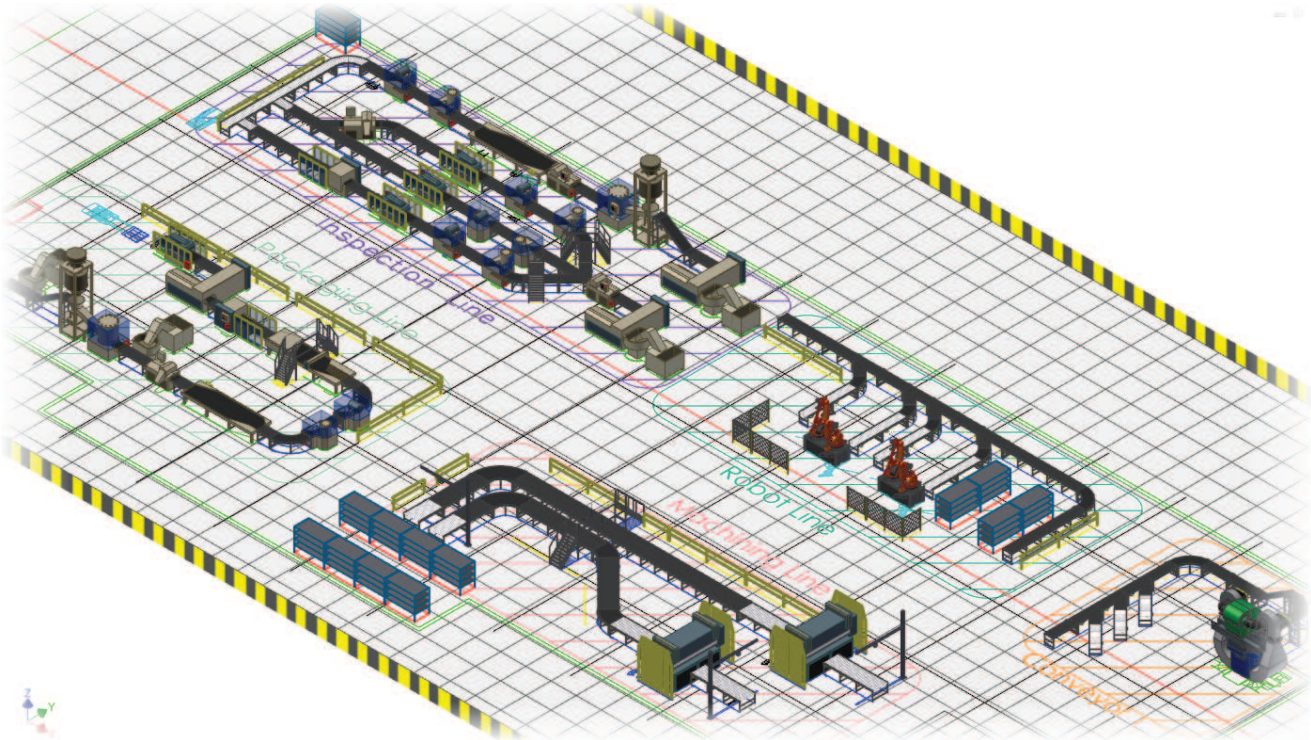

Lesson: Best Practices

The Autodesk Factory Design Suite simplifies the factory layout process using a simple, easy to understand workflow. This section covers several recommendations for maximizing your design productivity while using the Factory Design Suite.

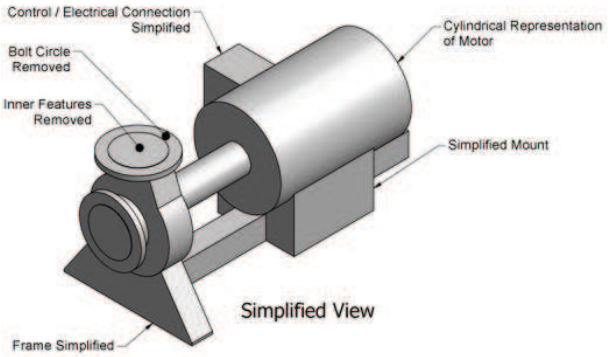

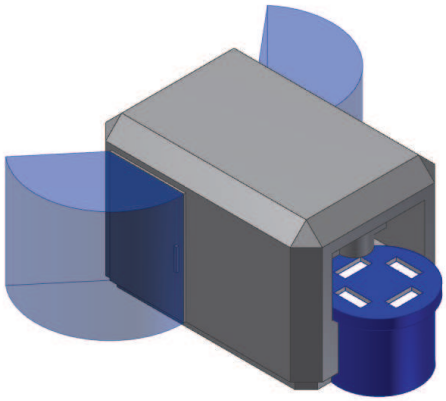

Clearance Zones

Objectives

After completing this lesson, you will be able to:

- Understand the Simplified Model practice.
- Create Access and Maintenance zones with separate solid bodies.
- Use the Shrinkwrap tool to convert an assembly into a single part.
- Understand how to handle multi-level designs.
- Objective 4

Simplified Model Design

The more features your assets contain, the more graphic resources they require. In addition, your factory design could contain hundreds or thousands of assets. For this reason, it is a recommended practice to generate assets in a simplified form with a minimal amount of detail. Assets should represent the design envelope of the actual component and deliver the necessary design information for the layout drawing.

Several general practices should be followed to simplify the design representation and reduce the model file size. Please note these practices are general guidelines and may need to be adjusted or ignored in certain situations. The best practices for modeling simplified representations are as follows.

- Fit, Form, and Function – Asset components must be modeled as accurately as possible. They must also be modeled to the simplest representation possible. The general guideline of Fit, Form, and Function should be followed. This term is sometimes referred to as F3. In manufacturing and design industries the term refers to the description of an item's identifying characteristics. If the specifications and criteria of an item's Fit, Form and Function are met; all other attributes are extraneous.
- Eliminate Fillets, Chamfers, and Tapers whenever possible.
- Eliminate Holes whenever possible. Some holes are necessary for proper attachment and location in the final factory design.
- Eliminate Shells – Remove all inner features that are not necessary.
- All Contact faces and edges should be modeled to the simplest form possible.
- Clearance and Maintenance spaces can be modeled as separate solids bodies using a transparent color.
- Assemblies should be modeled or converted to single components if possible.
- All Adaptive features should be removed from equipment models.
- Do not include fasteners in assembly designs

The following examples illustrate the realistic view of a component or assembly, and the recommended simplified form that should be modeled for the Factory Asset Library.

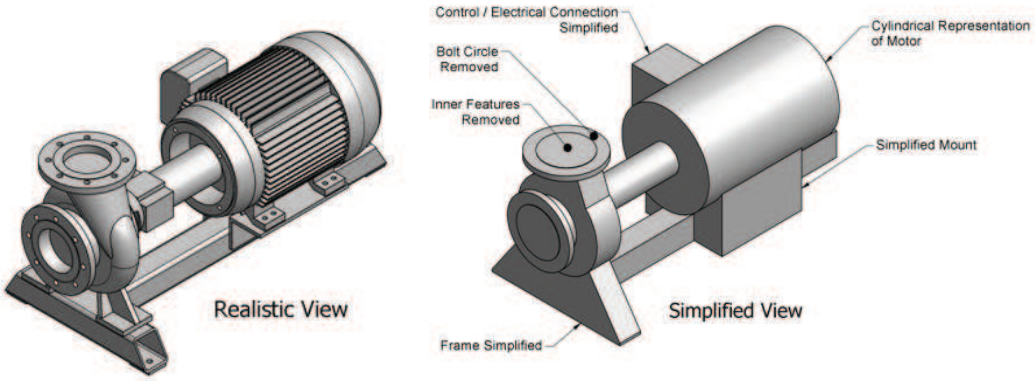

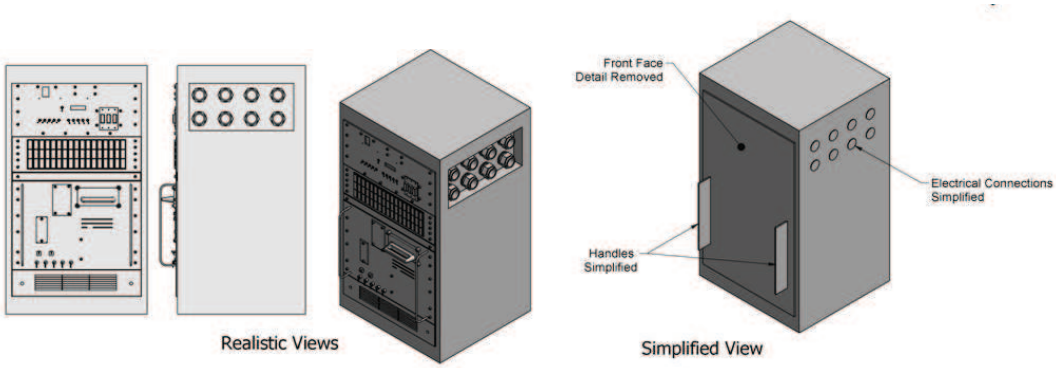

Create Clearance Zones as Separate Solid Bodies

Clearance and maintenance spaces can be modeled as separate solid bodies and displayed with a transparent color. The appearance of the clearance zones can be controlled by establishing a simple on / off parameter.

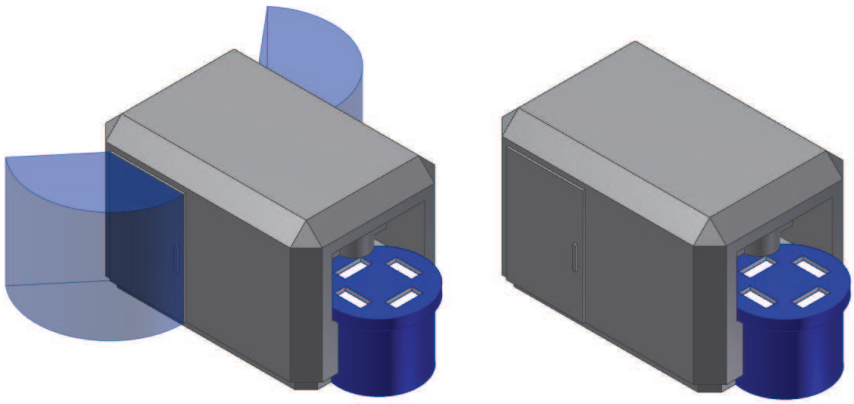

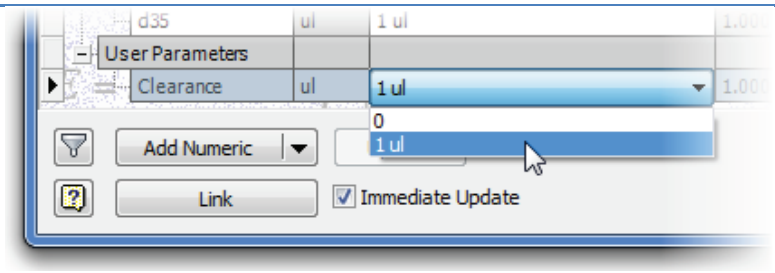	**Creating a simple On / Off Parameter** **Define A User Parameter** ▪ Create a Numeric Parameter setting the unit to unitless and the number to one. ▪ Make the value a Multi-Value and add 0 as an alternative.
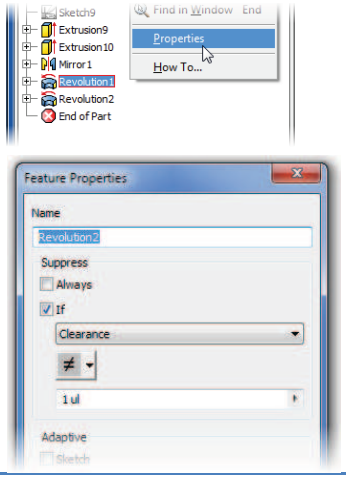	**Set Suppression for a Feature by Parameter.** ▪ In the Browser, Right Click the desired feature and select Properties from the menu. ▪ In the Feature Properties dialog, set the Suppress option to IF. ▪ Select the On / Off Parameter from the drop down list. ▪ Set the argument to Not Equal. ▪ Enter the value of 1. ▪ Click Ok.

Converting an Assembly into a Single Part - Shrinkwrap

One of the primary methods of saving computer resources is to minimize the number of files referenced into the main assembly. Subassemblies can be converted to a single part saving many file references in the overall factory layout. The Shrinkwrap command can be used to convert an assembly into a single component. Holes and interior features can be removed simplifying the form of the component.

Note: The single part representation of multiple bodies is critical to reducing the overall part count in the overall factory assembly. The Pump shown below is a good examples of converting (Shrinkwrap) an assembly into a single component.

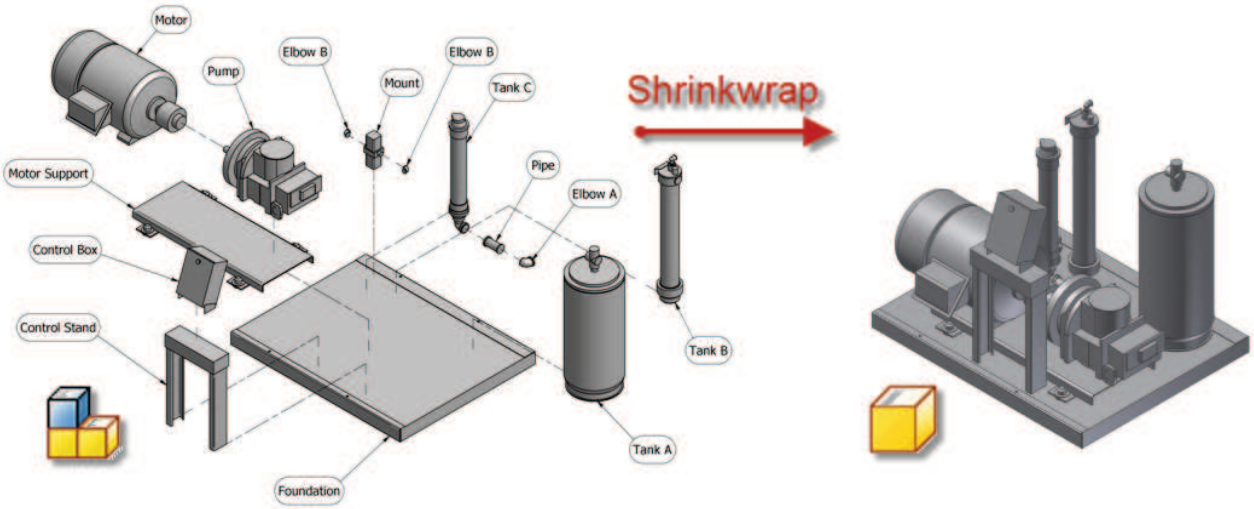

	Shrinkwrap an Assembly to a Single Component.
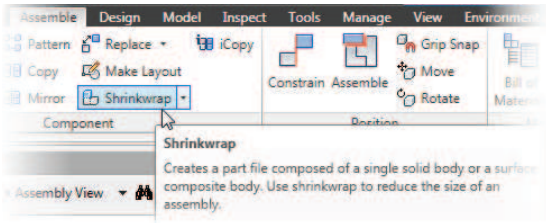	Open the desired Assembly. From the Assembly ribbon, click the Shrinkwrap tool.
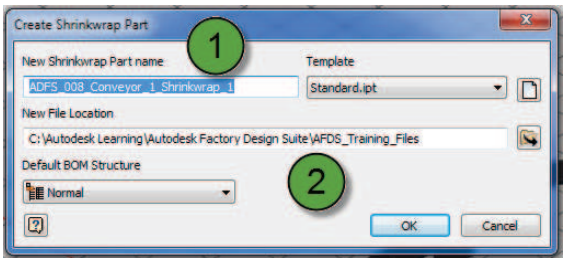	In the Create Shrinkwrap Part dialog… ▪ Enter a name for the new component (1). ▪ Specify the New File Location (2). ▪ Click Ok.

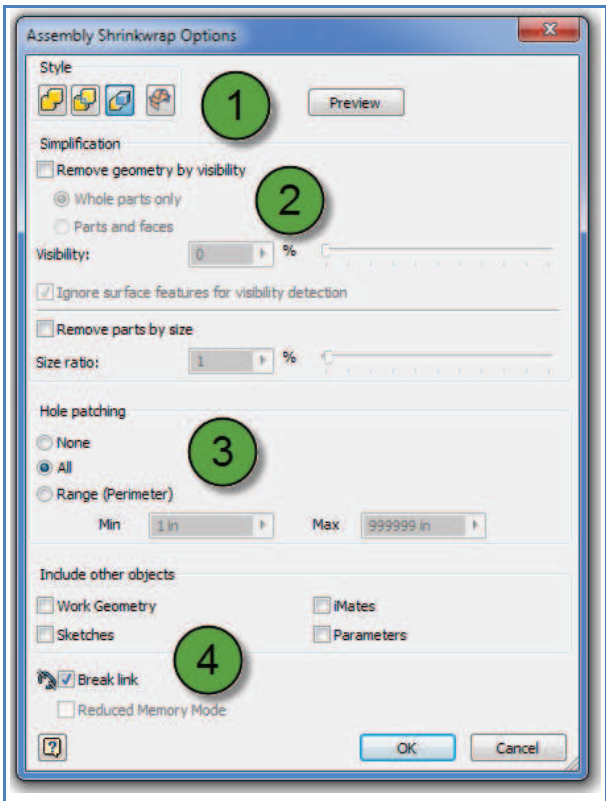

Assembly Shrinkwrap Options

1. **Style** - Specify how multiple bodies are to be handled during the shrinkwrap operation.
   - Single solid body merging out seams between planar faces Select to produce a single solid body without seams between planar faces. When you merge seams between faces, the face assumes a single color.
   - Solid body keep seams between planar faces Select to produce a single solid body with seams between planar faces retained.
   - Maintain each solid as a solid body Select to produce a multi-body part that contains a unique body for each part in the assembly.
   - Single composite feature This is the default selection. Select to produce a single surface composite feature. This selection produces the smallest file. Colors and seams of the original components are retained. The mass properties of the original assembly are cached. and retained.
2. **Remove geometry by visibility** Select the check box to enable the options to remove geometry based on visibility. The check box is selected by default.
3. **Hole Patching** –
   None - Does not remove any holes.
   All - Removes all holes that do not cross surface boundaries. Holes do not need to be round to be included. It is the default setting.
   Range - Specifies the circumference or perimeter of the holes to include or exclude. Holes do not need to be round to be included.
4. **Break Link** - Permanently disables any updates from the source component.

Click OK.

Creating a Multi-Level Factory Design

Multi-Level factory designs require a separate layout assembly for each floor. As described in the Divide and Conquer Workflow section, a separate assembly will be created for each level of the factory design. Unlike the previous examples, the new factory layouts are created in context of the main factory using the Create command located on the Assemble ribbon.

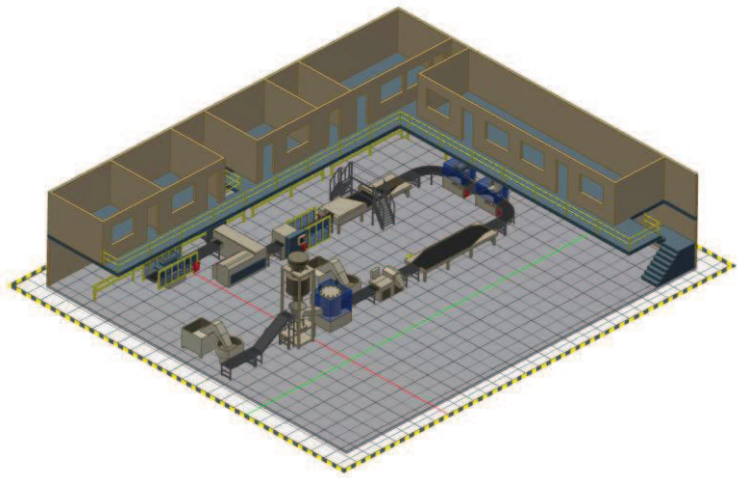

	To Add a Second Level to the Factory Layout…
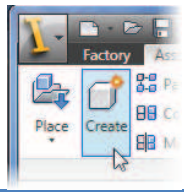	On the Assembly ribbon, Start the Create tool.
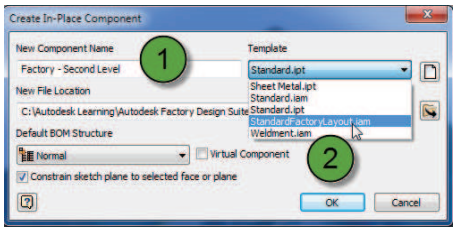	In the Create In-Place Component dialog… 1. Enter a name for the new layout. 2. Select the StandardFactoryLayout.iam template from the template dropdown list. Click OK.
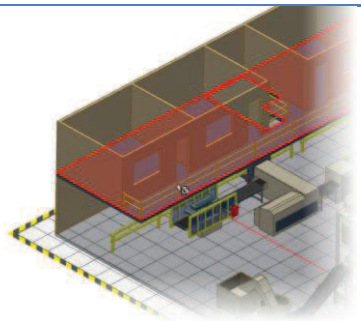	Select the face or work plane that represents the landing surface of the second level.

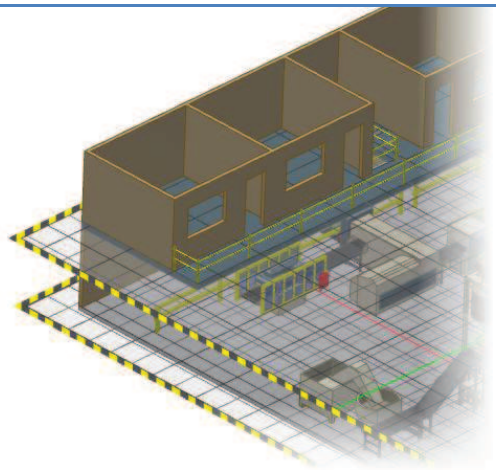	Use the Resize floor command to alter the size of the new floor.

Chapter Summary

This chapter presented the recommended best practices for working with Autodesk Factory Design Suite. The Project settings and supporting directory structure was also discussed. Knowing the supporting directories and following the best practice workflow will allow you to successfully design your factory layout.

Having completed this chapter, you can:

- Create a Project file for a typical factory design.
- Understand the supporting file directories for Autodesk Factory Design Suite.
- Understand the Best Practice for dividing a factory design into subassemblies.
- Understand the Best Practice for modeling a Simplified form for factory assets.

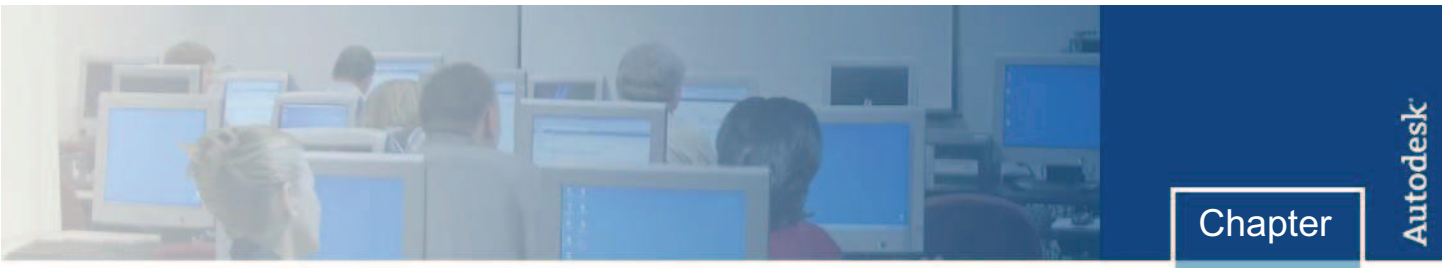

Chapter

12

Basic View Creation

Now that you understand the basics of factory design, you need to learn how to create production-ready drawings of those designs. Basic view creation with Autodesk® Inventor® is quite simple when you understand tools and recommended workflows. Within only a few minutes, you can easily create plan, elevation, section, detail, and even isometric views of your 3D factory Layouts.

Objectives

After completing this chapter, you will be able to:

- Navigate the Autodesk Inventor user interface when creating and editing drawing sheets.
- Create base and projected views of 3D parts and assemblies.
- Create and edit section views.
- Create and edit detail views.
- Create and edit cropped views.
- Add Annotations to Drawings.
- Review the AutoCAD Interoperability with Inventor DWGs.

Lesson: Drawing Creation Environment

This lesson describes the main interface components in the drawing environment related to creating production-ready drawings. When you create, annotate, and edit a drawing sheet, you have the same tools that you have when working on an assembly or part. However, the tools and information that display on the ribbon and browser may vary.

Being able to navigate the user interface when creating and editing drawing sheets has a direct impact on your ability to complete your work efficiently.

The following illustration shows the drawing creation environment.

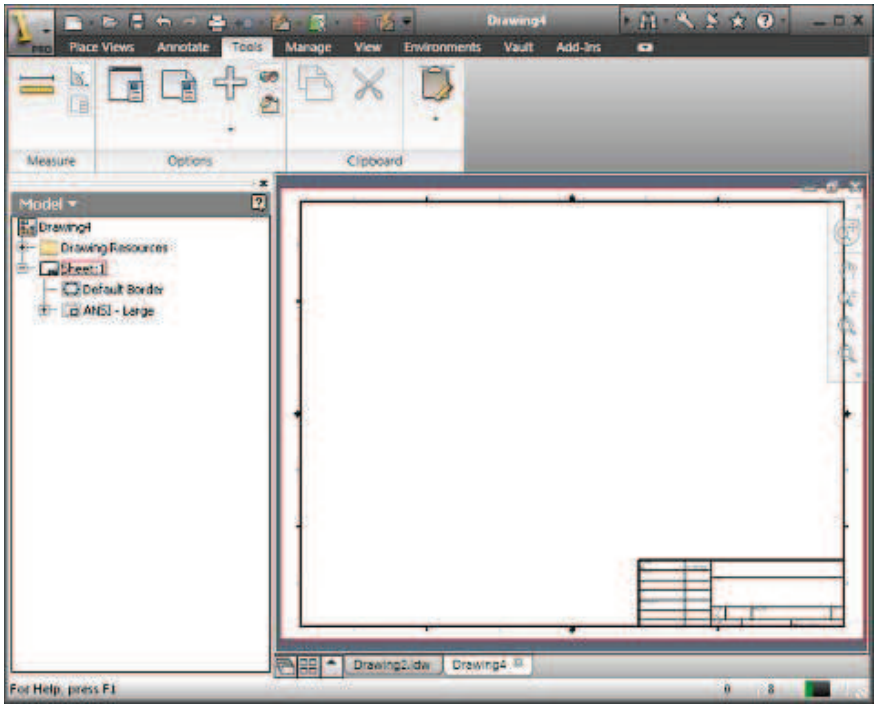

Objectives

After completing this lesson, you will be able to:

- Describe a production-ready drawing and its purpose.
- Describe the process for creating production-ready drawings.
- Recognize the different areas of the drawing creation environment.
- Navigate the drawing creation environment.

About Creating Drawings

A drawing that can be used to produce a factory assembly as specified is referred to as a production-ready drawing. When creating a production-ready drawing, you work in the drawing environment. Within this environment you create the drawing views of the factory assemblies and add annotations to fully communicate your design requirements and intent.

The following illustration shows a production-ready factory drawing.

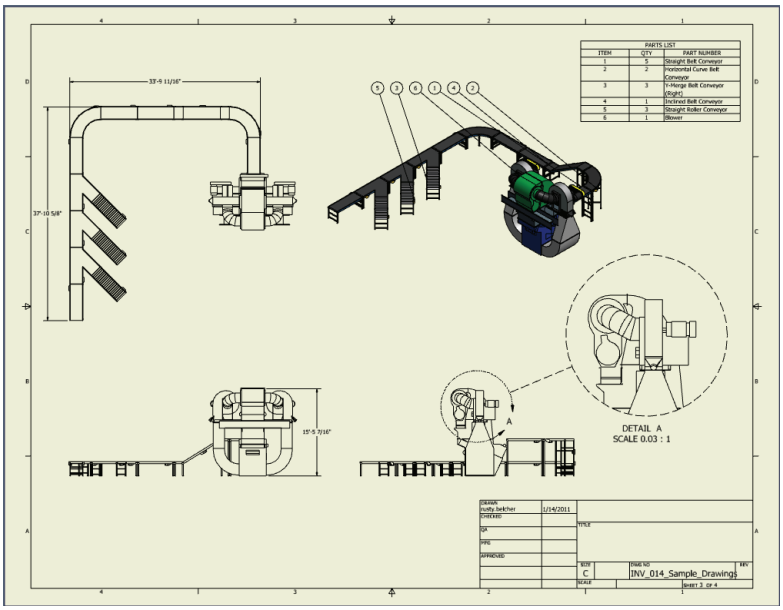

Definition of Production-Ready Drawings

A production-ready drawing contains all the necessary views, annotations, notes, revisions, and title block information, required to manufacture the objects displayed in the drawing.

In the following illustration, the final view, an isometric view, provides additional information for collaborators who cannot read conventional 2D drawings.

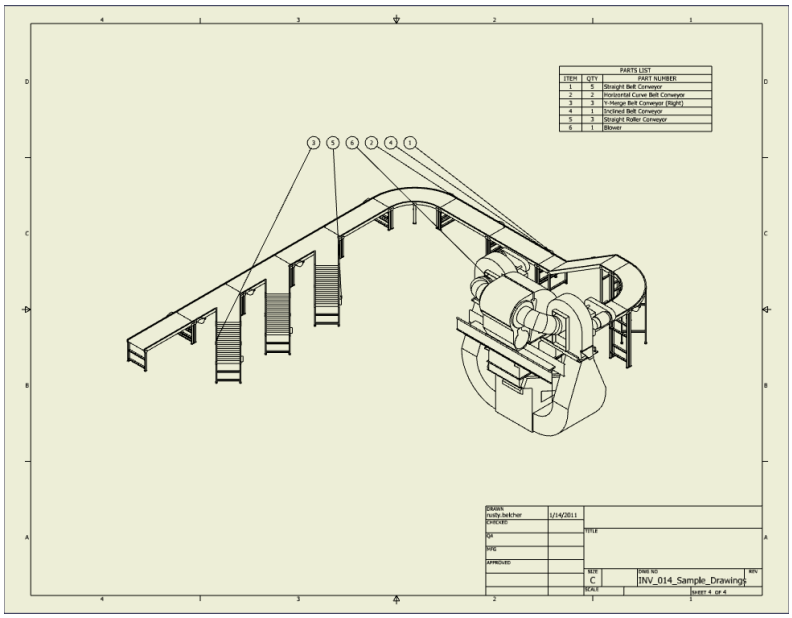

Example of Drawing Views

Production-ready drawings communicate design requirements for manufacturing. To communicate these requirements, a production-ready drawing contains the required combination of views and annotations. A drawing can contain any of the following views:

1. Base views
2. First or third angle projection views
3. Isometric views
4. Section views
5. Detail views
6. Draft views

Example of Annotations

A drawing can also contain the following annotations:

1. Dimensions
2. Hole notes
3. Chamfer notes
4. Centerlines and center marks
5. Notes
6. Parts list
7. Balloons

Creating Drawings

You create drawings to convey information. Depending on the type of parts or assemblies required for production, you create different views and add annotations to define every aspect of the design. A production-ready drawing contains all the necessary views, annotations, and notes to complete the manufacturing or assembly process.

In the following illustration, a detail view is created to simplify the annotation process.

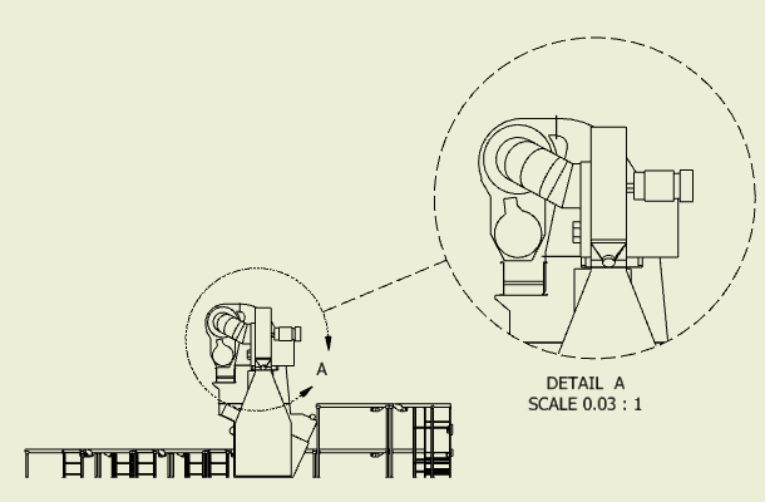

Process: Creating Drawings

The following steps outline the process for creating drawings.

1. Determine the critical aspects of the design.
2. Determine the views required to show the aspects of the design.
3. Create the drawing views.
4. Add drawing annotations.
5. Add any notes or other information needed to manufacture the design.
6. Enter title block data.

About the Drawing Creation Environment

The drawing creation environment enables you to create production-ready drawings by creating the necessary views, annotations, notes, and other information needed to produce a part or assembly. The drawing creation environment has four main areas that you use in the creation of a drawing: drawing sheets, standard tools, panel bars, and the browser.

The following illustration shows the drawing creation environment.

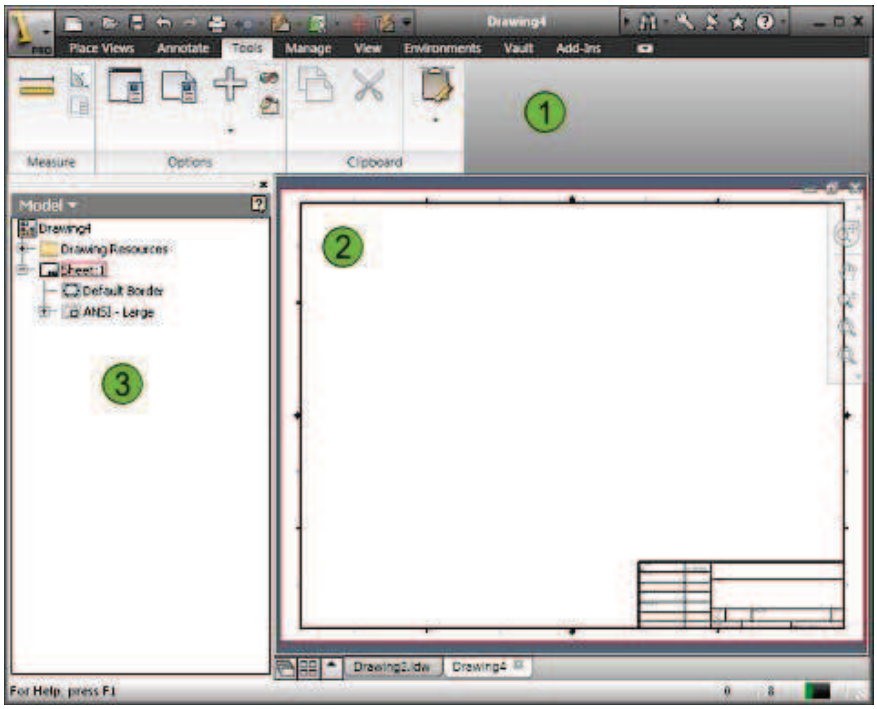

	Option	Description
1	**Ribbon**	The ribbon contain the tools that you use to create views and annotations and the standard tools.
2	**Drawing Sheet**	The primary, and typically largest, area of the drawing environment is the drawing sheet. The drawing sheet represents the paper on which the drawing is created.
3	**Browser**	The browser tracks the history of the drawing file and has access to drawing resources such as title blocks, borders, and sheet sizes.

Project Files

When you create designs, each one consists of multiple files and file types. The design and documentation of a single part file require at least two separate files: (a) a part file and (b) a drawing file. The design and documentation of assembly models require a minimum of three different file types: (a) assembly files, (b) part files, and (c) drawing files.

Using separate files for each file type is critical for performance and is common among most parametric modeling systems. By storing path information for each project, the application can search for the required files when opening an assembly, presentation, or drawing file. The need to search in different path locations for files is the primary purpose of project files.

The following illustration represents file dependencies in a typical assembly design.

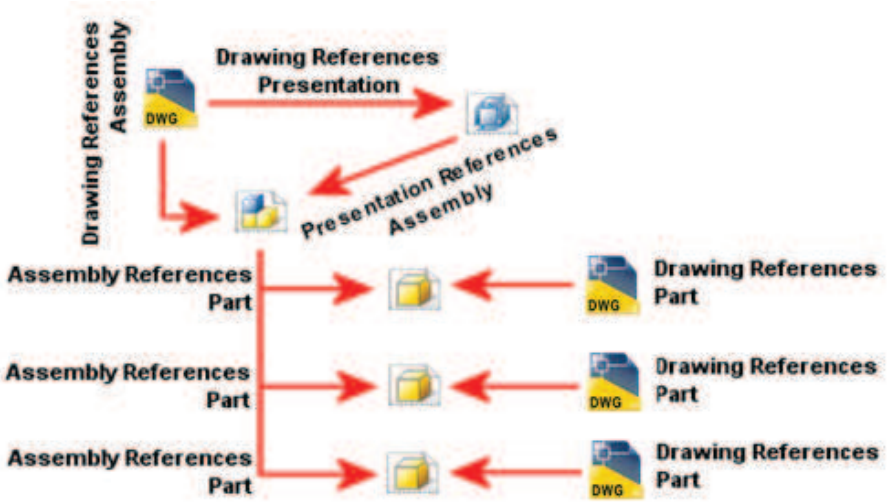

When you open an assembly, drawing, or presentation file, the active project file is used to resolve path locations to the referenced files.

Definition of the Drawing Creation Environment

You use the drawing creation environment to create 2D representations of your 3D models and assemblies.

In the following illustration, the drawing creation environment is used to create the necessary views and annotations for a conveyor line.

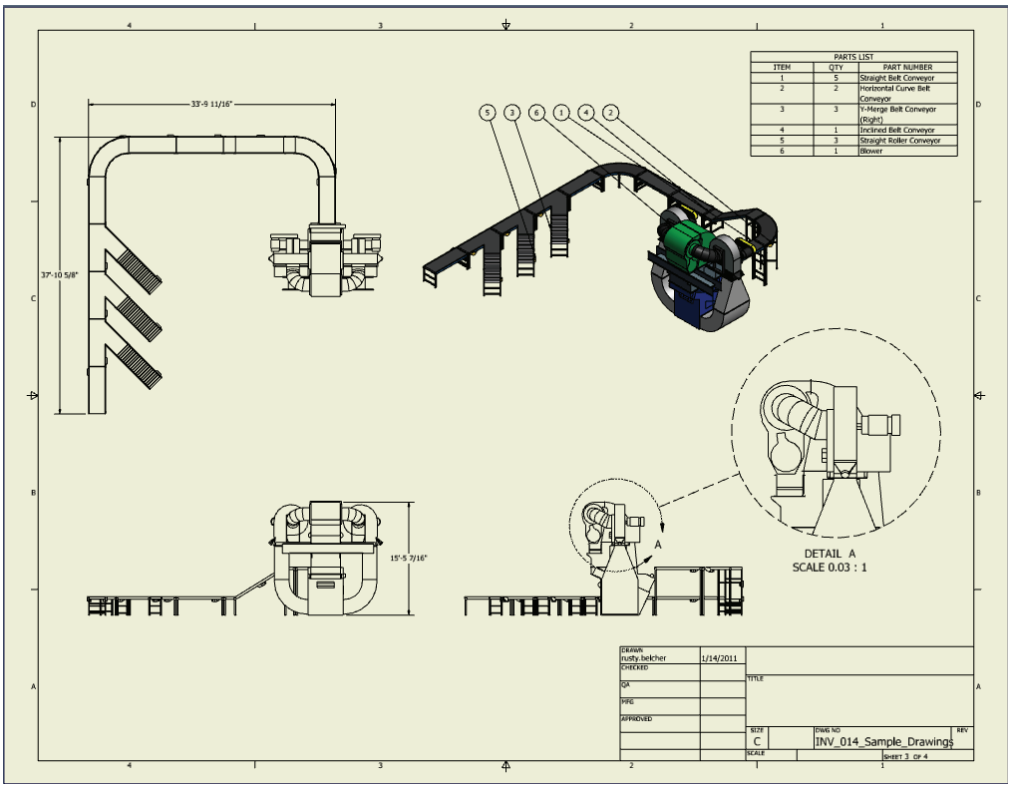

Using the Drawing Environment

The drawing environment contains a number of tools that you can use to create drawing views and add annotations to the view or drawing sheet. The tools on the ribbon are split between the Place Views tab, the Annotate tab, and the browser.

In the following illustration, the ribbon is being switched to the Place Views tab for the addition of drawing views to the sheet.

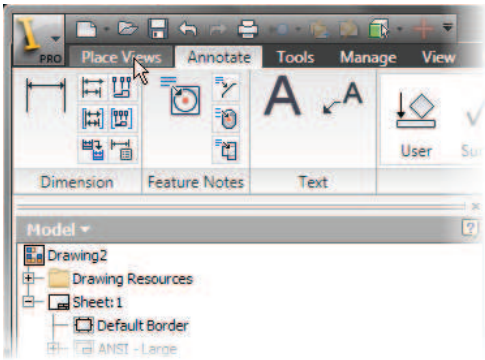

Drawing Tabs

In the drawing environment, on the ribbon, two tabs are available for creating production-ready drawings. You use the Place Views tab to create the various drawing views required to document your parts and assemblies.

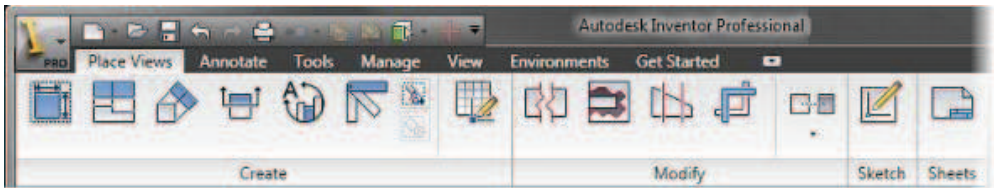

You use the Annotate tab to add dimensions, notes, and symbol annotations to the drawing views. You can switch between the tabs by clicking the tab name on the ribbon.

Drawing Environment Browser

In the drawing environment the browser displays the Drawing Resources folder, which contains sheet formats, borders, title blocks, and sketched symbols. It also displays each sheet in the drawing, along with the views that you create for each.

In the following illustration, the cursor is moved to the browser and a new title block is being inserted.

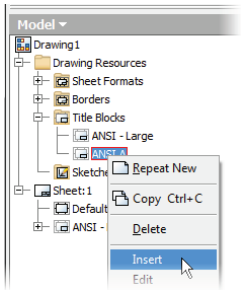

Process: Navigating the Tabs

Navigating the drawing environment is an iterative process. When a drawing has been started, and a base view placed, annotations can be added. Subsequent views can be placed as needed, making additional annotation or even a different sheet size necessary. The following steps outline the general process when navigating the drawing environment.

1. Start or open a drawing file.
2. Select the expected drawing size.
3. Create a base view.
4. Create projected views.
5. Click the Annotate tab.
6. Add drawing annotations.
7. Enter title block data.

Exercise: Use the Drawing Creation Environment

In this exercise you navigate the drawing creation environment to create projected views and change the sheet size.

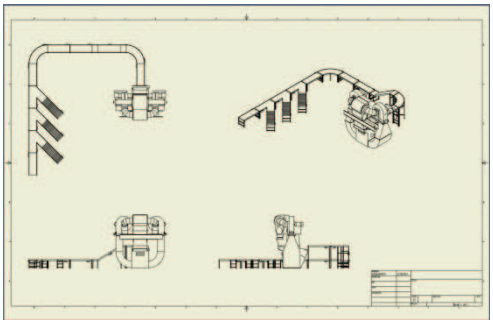

The completed exercise

1. Start a New **ANSI(in).dwg**
   - On the Quick Access toolbar, click File New.
   - Click the English Tab.
   - Select the ANSI (in).dwg drawing template.

2. Place the Base View:
   - On the Place Views ribbon, click the **Base View** tool.

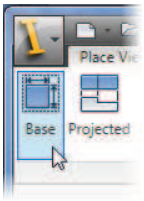

   - On the Drawing View dialog, click the browse button and select: **INV_014_Create_Views.iam**

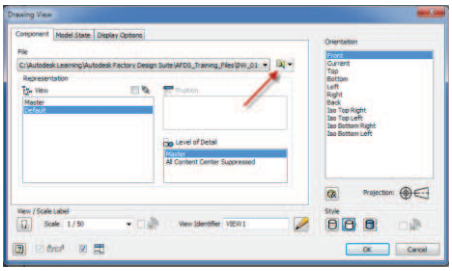

   - Click **OK**

3. Left click on the drawing sheet to place the base view.

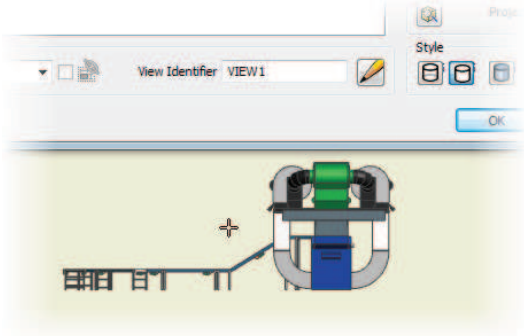

4. Place the Top and Right Side View.
   - Left click directly above, and directly right of the base view to create the Top and Right side views.

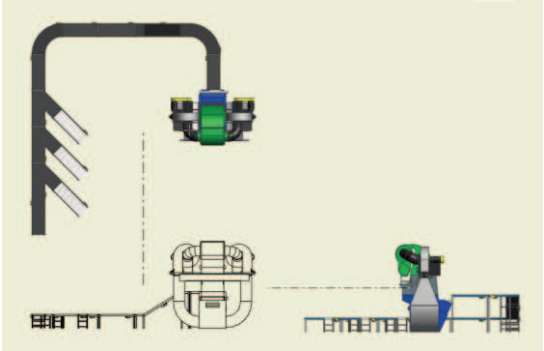

5. To create an isometric view, click above and to the right of the view that you just placed. Click **Create**.

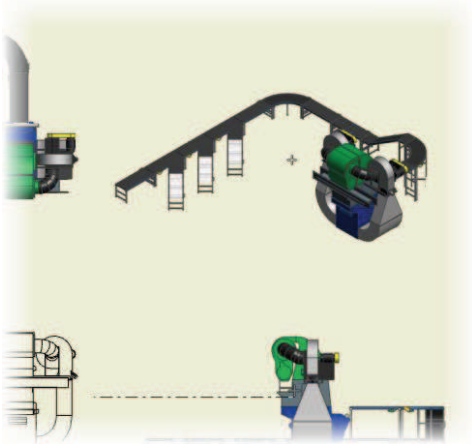

6. Change the size of the Sheet:
   - In the browser, Right Click on the Sheet node and select **Edit Sheet** from the menu.

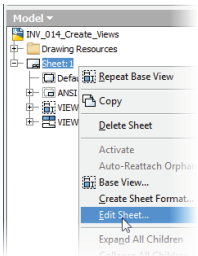

   - In the edit sheet dialog, change the sheet size to **D size**.

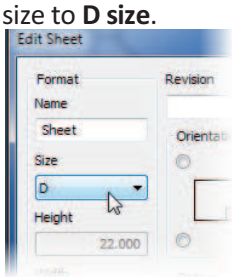

   - Click **OK**

7. Click and drag the border of each drawing view to position them as shown.

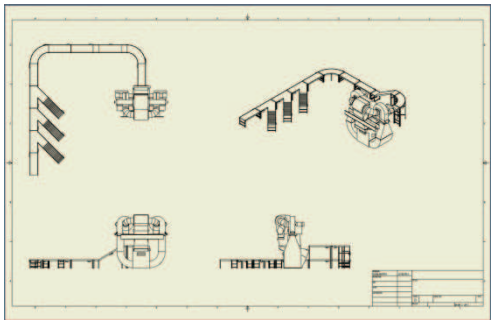

8. To access annotation tools, click the **Annotate tab**.

9. Click Annotate tab > Dimension panel > **Dimension**:
   - Click the largest radius on the main machine.
   - On the right end of the Annotate ribbon select the **Architectural (ANSI)** style form the style drop down list.

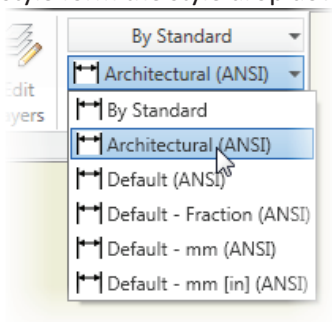

   - Click next to the radius to place the dimension.
   - Right-click above the dimension.
   - Click **Done**.
   - If the Edit Dimension dialog box appears, click **OK**.

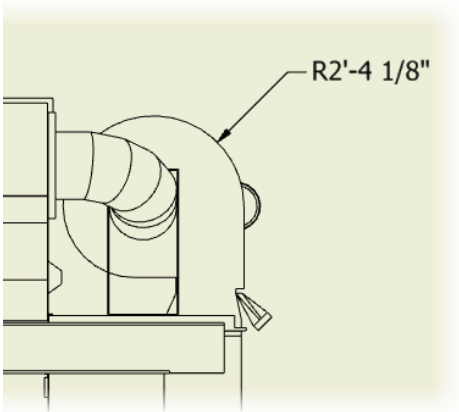

10. Close All Files
    End of Exercise.

Lesson: Base and Projected Views

This lesson describes creating projected views of your part or assembly files.

After you complete the 3D design of your factory layout, manufacturing requires dimensioned drawings in order to build your design. The first step in creating production drawings is to create the required orthographic and isometric views.

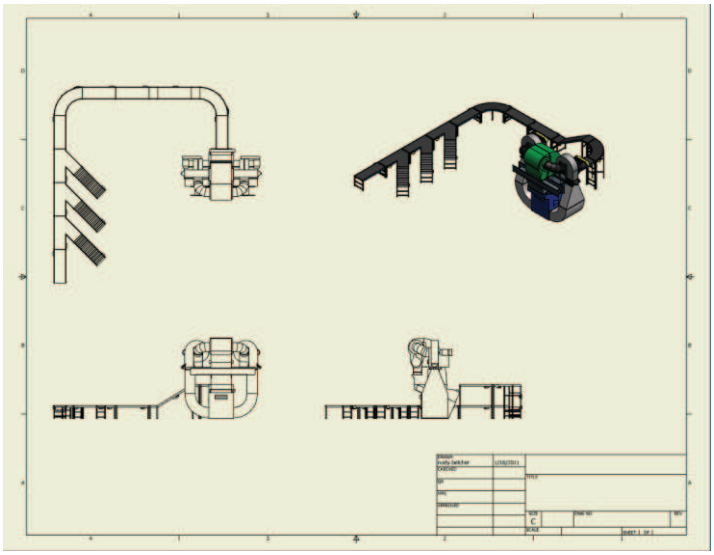

Objectives

After completing this lesson, you will be able to:

- Create base views of 3D factory assemblies.
- Create and edit exploded drawing views.
- Create projected views.
- Edit orthographic views and describe how other projected views may be affected.

Creating Base Views

You create a base view to begin creating orthographic views. The base view establishes the original view orientation and scale upon which projected views are based. When you create the base view, you specify the file to be used for the view, the view orientation, scale, and style. After you specify this information, the view is placed onto the sheet and an associative link between the drawing and the part, assembly, or presentation file is established. If the part geometry changes, those changes are reflected in the drawing.

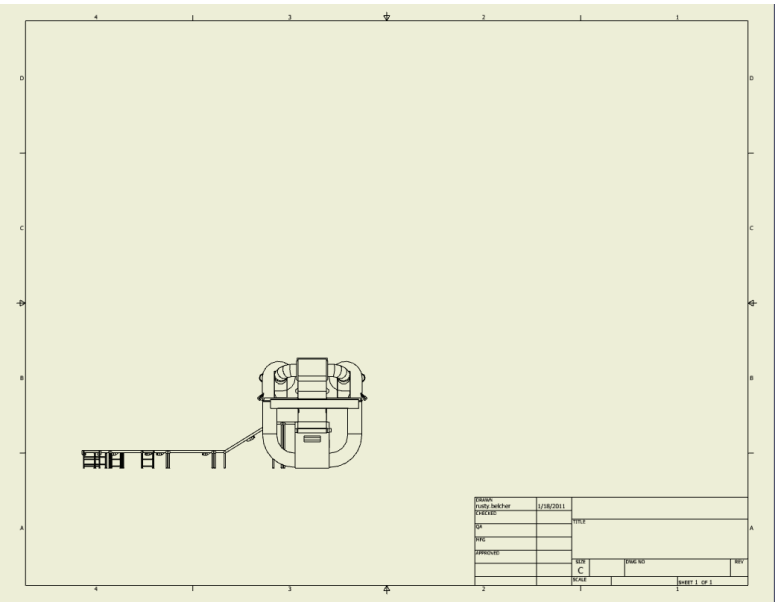

Access

Base Views

Ribbon: **Place Views tab > Create panel > Base**

Toolbar: **Drawing Views Panel**

Shortcut Menu: **Base View**

Drawing View Dialog Box

The following options are available in the Drawing View dialog box.

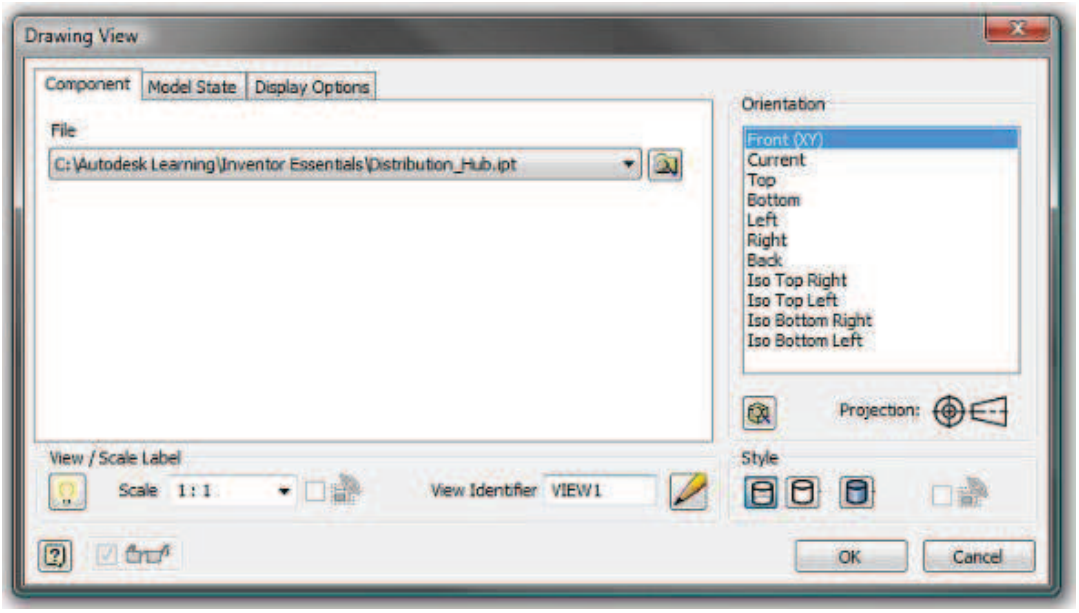

Option	Description
File	Determines the part or assembly file to create its view. If you have a part, assembly, or presentation file open, it is the default file listed. If multiple files are open, you select them from the drop-down list.
Orientation	Determines orientation for the base view. Move your cursor away from the dialog box to see a preview of the view before it is created. The standard view orientations are based upon the origin planes of the file you select.
Change View Orientation	Opens the model's 3D viewing window. You use standard view tools to define a custom view orientation.
View / Scale Label	Enables you toggle the display of the view and scale label, select a preset scale value, or enter a custom value for the view. Additionally, you can enter a label for the view or accept the default view label. ▪ Scale from Base: Not available when you create a base view. You use it when you edit projected views. ▪ Visible: Displays the scale and view label on the sheet under the view. ▪ Edit View Label: Displays the Format Text dialog box.

Option	Description
Style	Rendering style for the view: ▪ Hidden Line: Hidden lines are displayed. ▪ Hidden Line Removed: Hidden lines are removed. ▪ Shaded: View is shaded using the same colors used in the assembly or part file.

Procedure: Creating Base Views

The following steps describe how to create base views.

1. Create a new drawing file.
2. On the ribbon, click the Base View tool.
3. Enter or browse for the Autodesk Inventor file to create the view, and adjust the options as desired for orientation, scale, and style. Click the sheet to place the view.

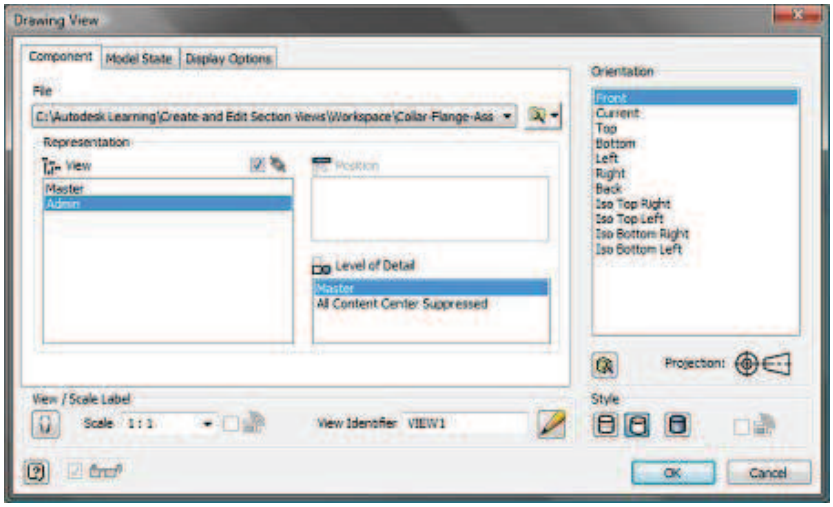

4. The base view is placed on the sheet according to the options specified.

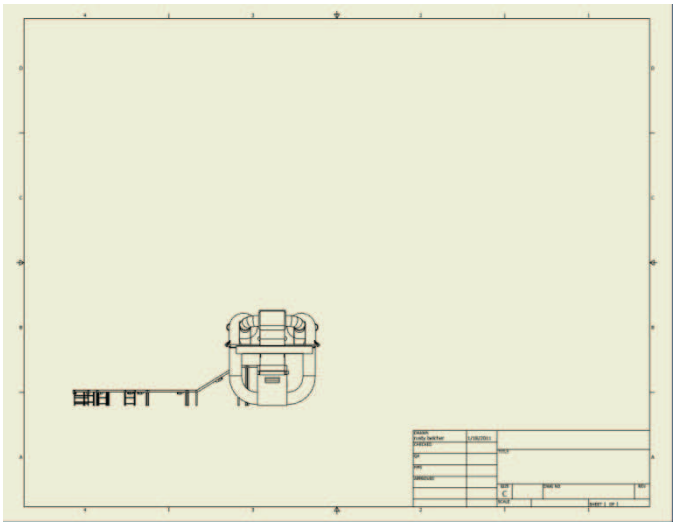

Creating Projected Views

The Projected View tool enables you to create projected views from any existing view on the sheet. If you select the Projected View tool you must select a parent view, then position each projected view. All view positions are previewed by a bounding box prior to the views being created.

When you create projected views, the view orientation is automatically determined based on its position on the sheet relative to the base view. If you place the projected view to the right of the base view, it generates a right-side projection of the parent view. If you place the projected view at an angle to the parent view, it generates an isometric view based on the relative position to the parent view.

By default, the following view properties are carried over from the base view:

- Scale
- Style (Orthographic Only)

In the following illustration, the right, top, and isometric views are projected from the lower left base view.

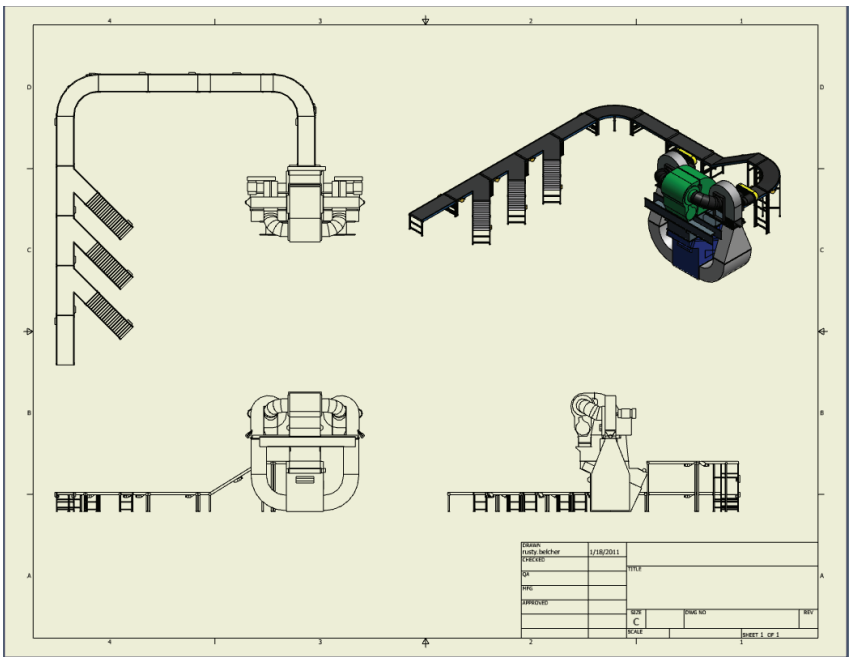

Drafting Standards Projection Setting

The description above is based on a Third Angle projection setting in the Drafting Standards dialog box. The First Angle projection method is also available.

Access

Projected View

Ribbon: **Place Views tab > Create panel > Projected**

Toolbar: **Drawing Views Panel**
Shortcut Menu: **Create View > Projected View**

Procedure: Creating Projected Views

The following steps describe how to create projected views.

1. On the ribbon, click Projected View.
2. Select the parent view.

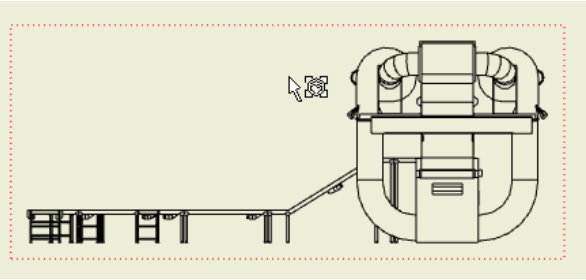

3. Click in the drawing to define the first projected view. Repeat until all views are defined.

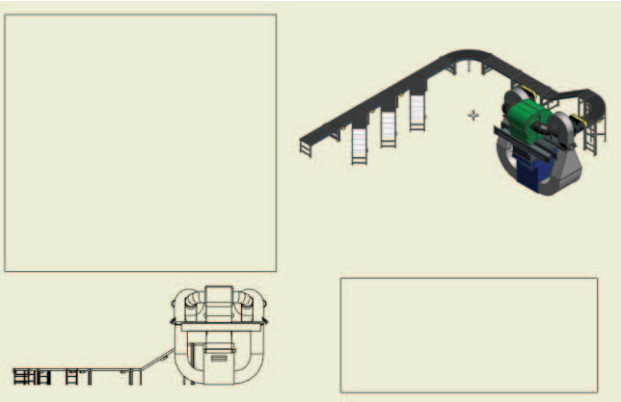

4. Right-click in the drawing. Select Create.

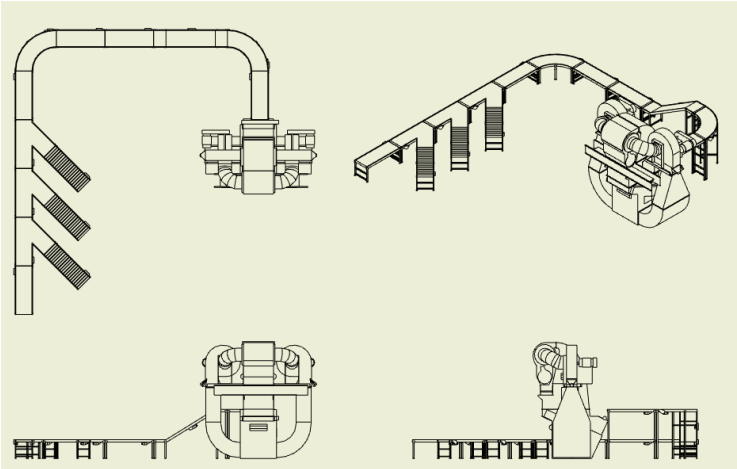

Properties of Editing Base and Projected Views

After you create base and projected views, you can edit the view properties using the Drawing View dialog box. Depending on the type of view, base or projected, different options are available for editing.

When you edit a base view, you can change the scale and style properties. However, while editing a projected view, you can change these properties only if you clear the Scale from Base or Style from Base options. In a projected view, these properties are linked to the base view to ensure the same scale and the same rendering style across views.

Editing a Base View

When you edit a base view, you can edit any option that is not grayed out. If you change the scale factor on the base view, all projected views with the Scale from Base option selected are updated to reflect the new scale factor.

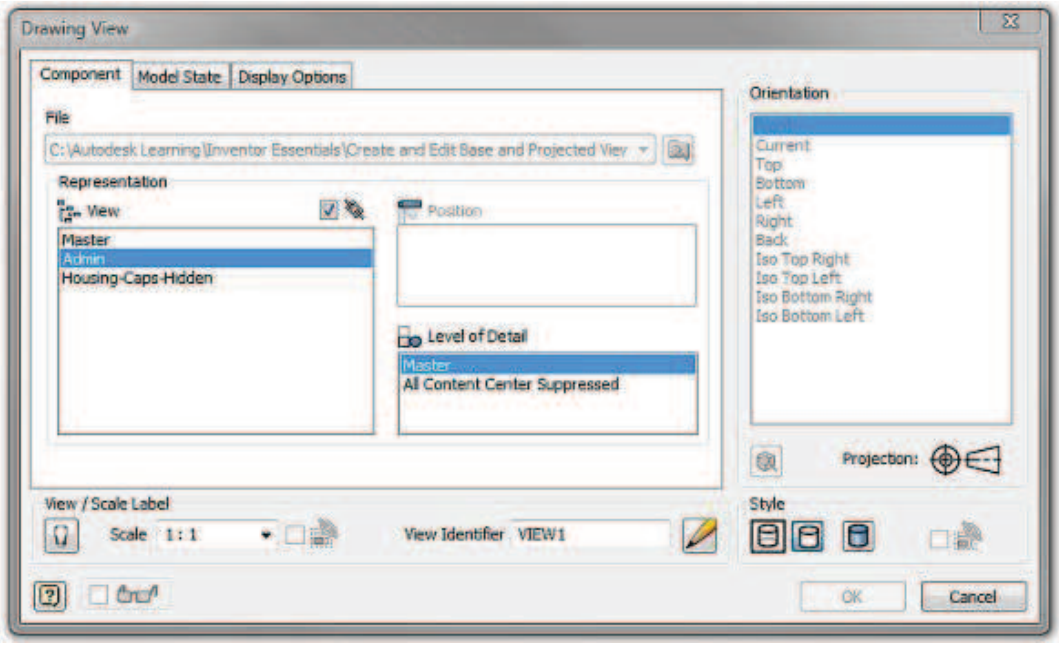

When you edit a projected view, you can edit any option that is not grayed out. Clear the Scale and Style from Base check boxes to change the view scale or rendering style.

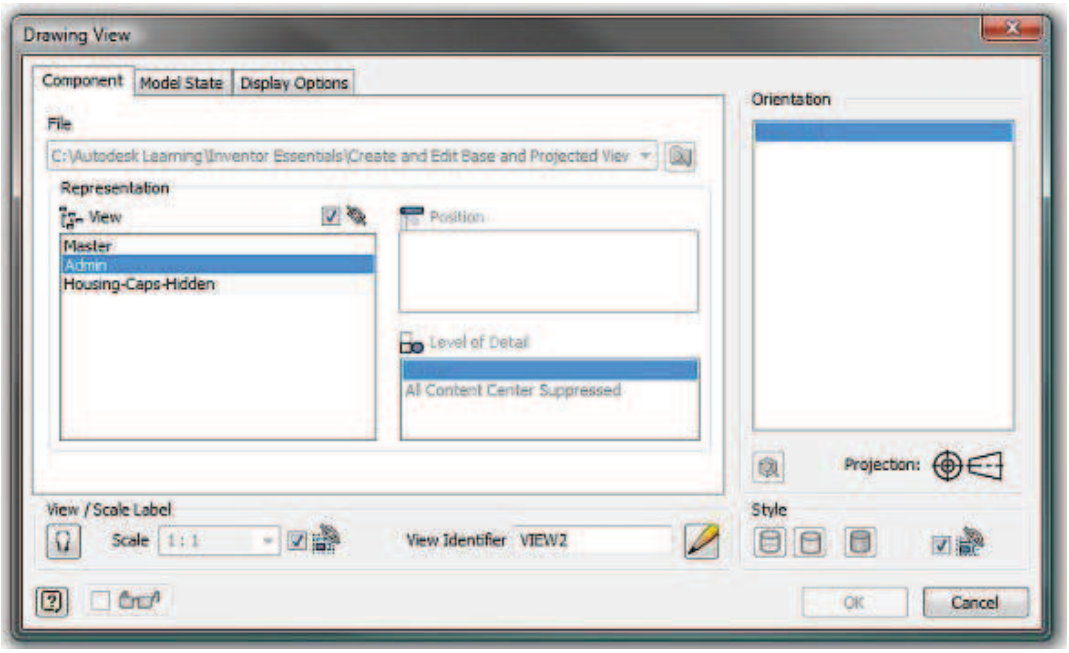

Exercise: Create and Edit Base and Projected Views

In this exercise, you create a new drawing and place a base view and three projected views of a rotor assembly as the base for a production-ready drawing.

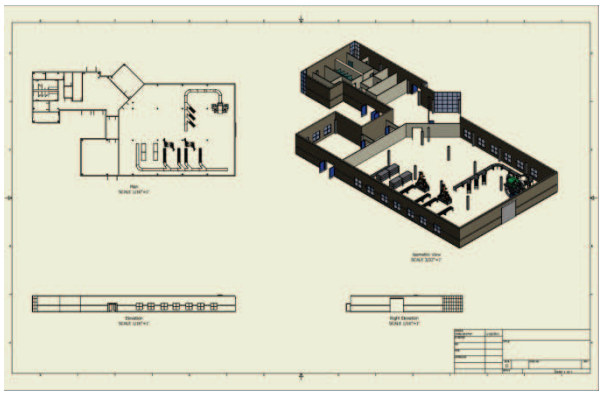

The completed exercise

1. Open **INV_015_Create_Edit_Views.iam**

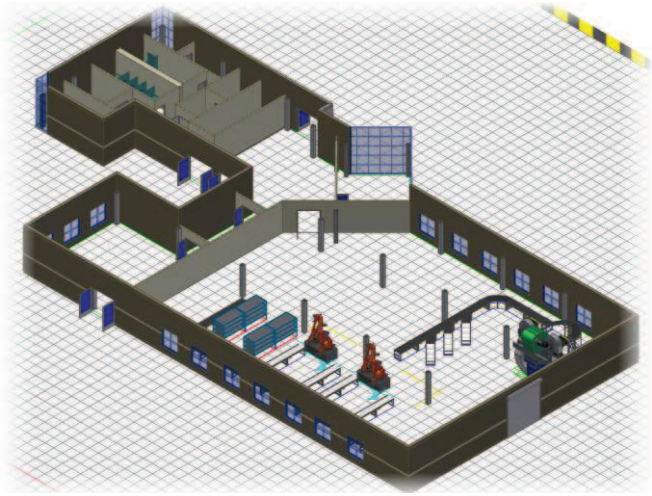

3. On the Quick Access toolbar, click **New**.
4. In the New File dialog box, select the English tab. Double-click the **ANSI (in).dwg** template.
5. In the drawing environment, Click Place Views tab > Create panel Base. Because the assembly is already open, it is automatically selected as the file for the drawing view.
6. In the Drawing View dialog box, adjust the options as shown:
   - Set the Scale value to **1/16”=1”** (1).
   - Turn on the Scale Value (2).
   - Enter **Elevation** in the View Identifier field (3).
   - Click the lower-left area of the sheet to place the view.
   - Right Click and select Done from the menu.

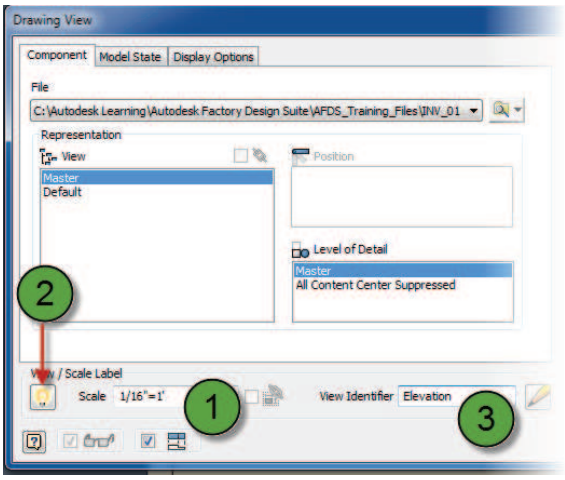

7. On the Place Views ribbon, Click the **Projected** view tool.

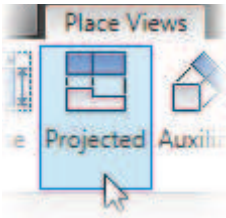

8. Select points on the sheet to position the views as indicated by the bounding box preview and isometric preview in the following illustration.

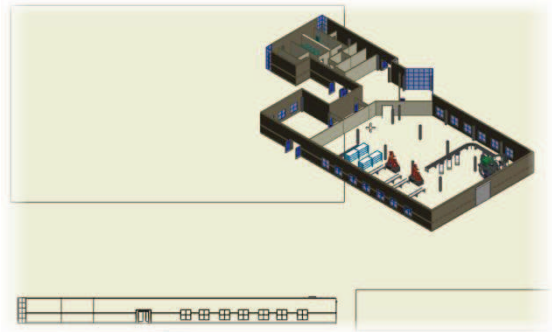

9. Right-click in the graphics window. Click Create to create the projected views.

10. The drawing views are displayed as shown in the following image.

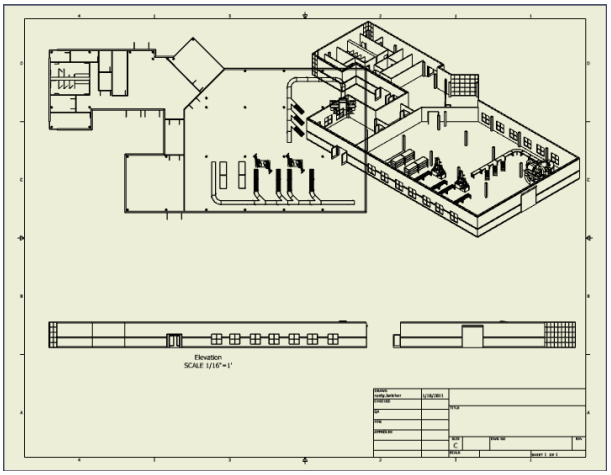

11. Edit the Sheet Size and Arrange the views.
    - In the browser, Right Click on the Sheet node and select edit sheet from the menu.
    - In the Edit Sheet dialog, set the sheet size to D.
    - Arrange the views as shown in the following image.

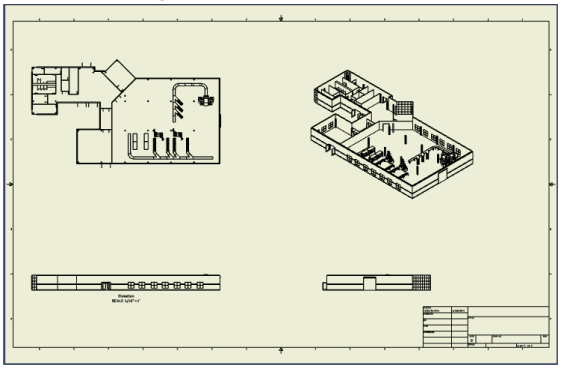

12. Right-click in the isometric view. Click **Edit View**.
    - In the Drawing View dialog box, under Scale, enter **3/32”=1’**
    - Click **OK**.

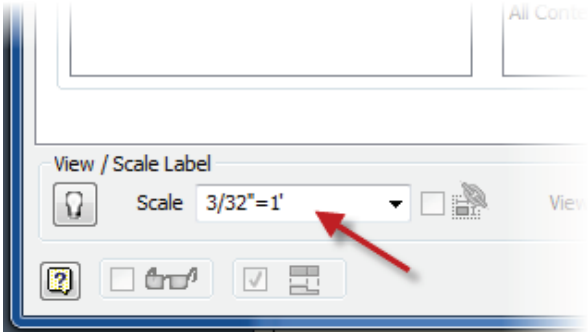

13. The projected isometric view updates to reflect the new scale as shown in the following image

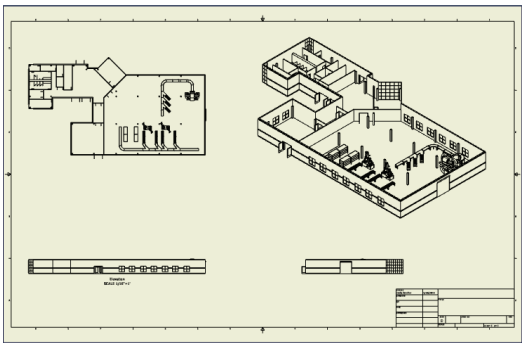

14. Right Click in the Top View and Click **Edit View** from the menu.
   - Turn on the View Label (1) and enter **Plan** in the View Identifier window (2)**.**
   - Repeat this process for the right side view. For this view enter **Right Elevation** for the View Identifier

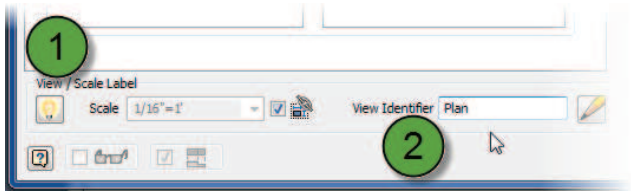

15. Right-click in the isometric view. Click **Edit View**.
   - Turn on the View Label (1) and enter ***Isometric View*** for the View Identifier (2).
   - Under Style, click **Shaded** (3).
   - Click **OK**.

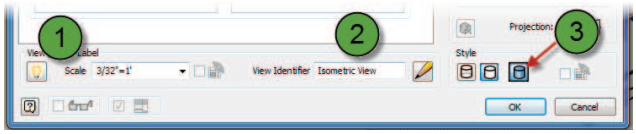

16. The isometric view updates to the shaded representation.

   Note: You may need to reposition the isometric view.

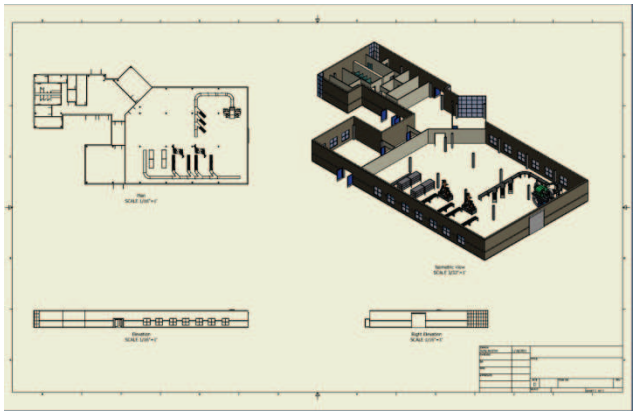

17. Close all files. Do not save.

Lesson: Section Views

This lesson describes creating section views of factory layout drawings. When you create drawings of factory layouts, important internal details are sometimes obscured by other features or assets.

Section views enable you to better visualize these important details by removing the assets or features that are obstructing the view. Features that were obstructed or displayed as hidden lines are drawn with continuous lines with hatch patterns representing the section plane.

In the following illustration, a half section view was created based on the initial view. Then an isometric projection was created from the offset section.

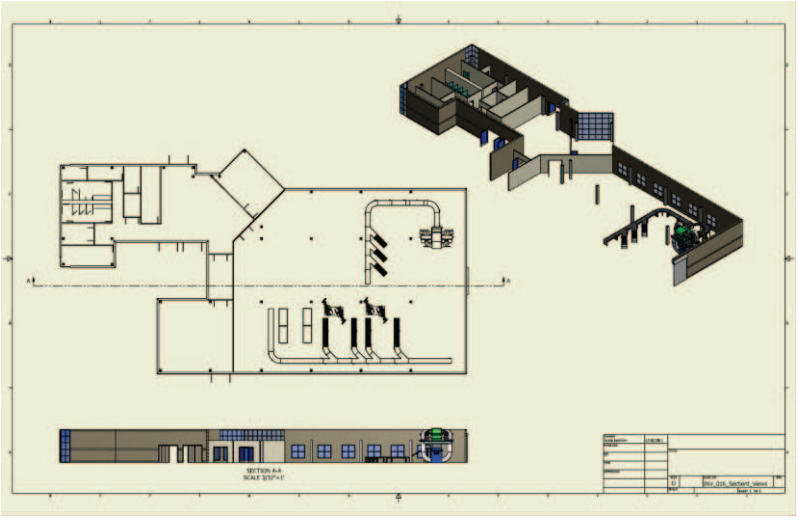

Objectives

After completing this lesson, you will be able to:

- Create section views.
- Edit section views.
- Control hatch and sectioning in section views.

Creating Section Views

In order to create a section view, you must have at least one view on the sheet on which the section line is drawn. After drawing the section line, you choose a side of the current view for the section view. The section view is generated based on the direction of sight relative to the view being sectioned.

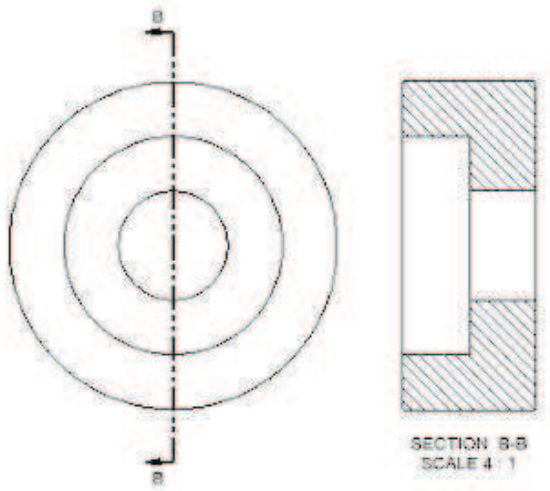

Access

Section View

Ribbon: **Place Views tab > Create panel**

Toolbar: **Drawing Views Panel**

Shortcut Menu: **Create View > Section View**

Section View Dialog Box

The following options are available in the Section View dialog box.

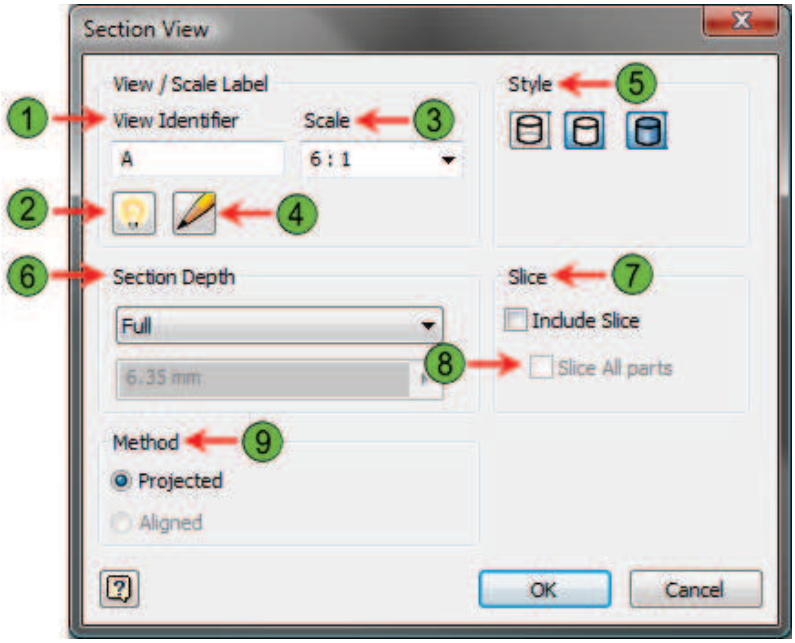

	Option	Description
1	**View Identifier**	Use to specify a view label or accept the default value.
2	**Toggle Label Visibility**	Displays the label and view scale on the sheet.
3	**Scale**	Scale factor for the section view.
4	**Format Text**	Access the Format Text dialog box.
5	**Style**	Rendering style for the view. ▪ Hidden Line ▪ Hidden Line Removed ▪ Shaded

	Option	Description
6	**Section Depth**	Section depth for the view. ▪ Full: Section depth is calculated through the entire part or assembly. ▪ Distance: Measured from the section line to calculate the section view. All geometry outside of the calculated distance is ignored and is not displayed in the view.
7	**Slice**	Depending on browser settings, when checked, some parts are sliced, and some sectioned.
8	**Slice All Parts**	Browser settings are overridden and all parts in the view are sliced according to the section line geometry. Parts not crossed by the section line are not included in the view. Section Depth fields are disabled.
9	**Method**	Use the Projected method to project the lines orthogonally to the section views position. The Aligned method projects section geometry perpendicular to each segment of the section line. This option only appears if the section line contains more than one segment.

Procedure: Creating Section Views

The following steps describe how to create section views.

1. With at least one view on the sheet, on the ribbon, click Section View.

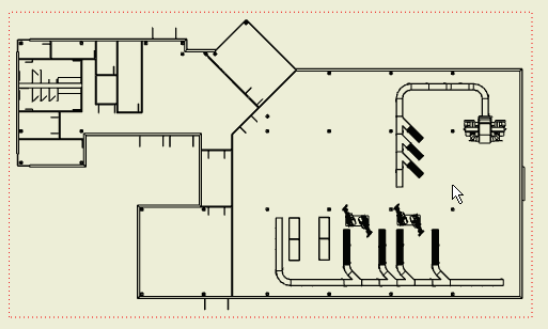

2. Select the parent view.
3. Enter the endpoints of the section line.
   - Select the first point of the section line. If necessary, use tracking to align the section line to a feature in the parent view.
   - Click additional endpoints to define the section line. The number of endpoints defined, and their directions, determine the type of section view created.

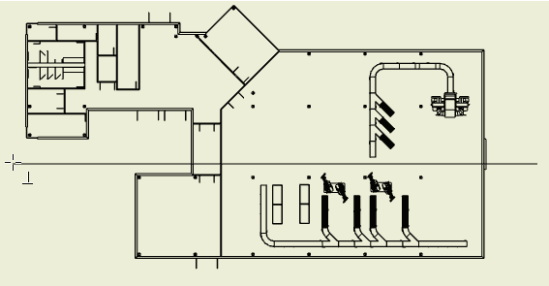

4. Right-click in the graphics window, select Continue.

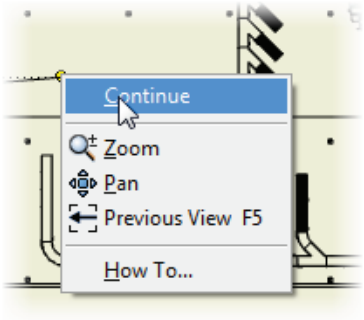

5. In the Section View dialog box, enter the desired values. **Note:** The projected method is used in this step.

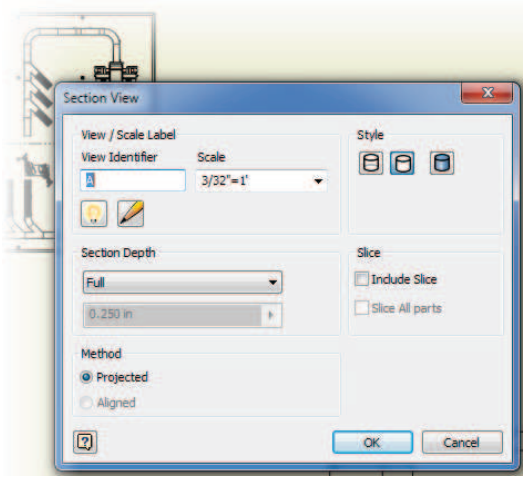

6. Move the preview to the desired location and click to place the section view.

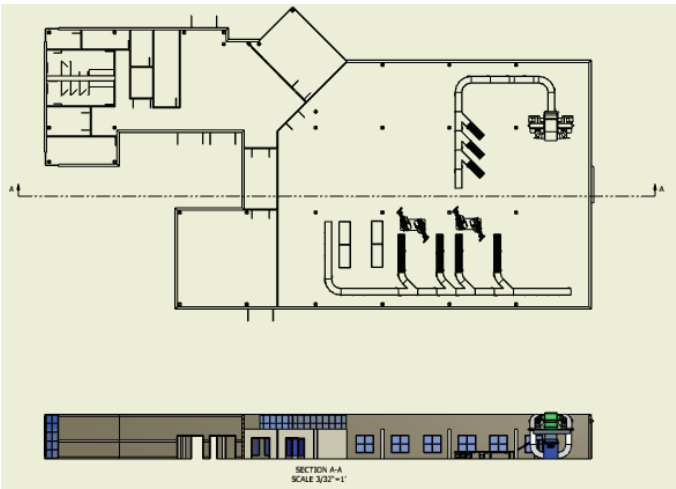

Exercise: Create and Edit Section Views

In this exercise, you create section views of factory layout.

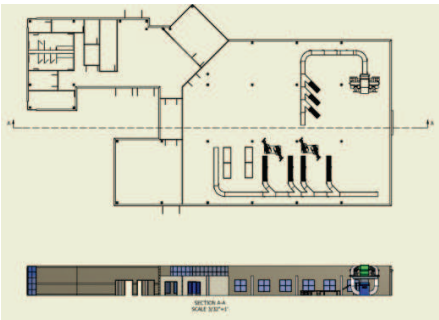

The completed exercise

1. Open **INV_016_Section_View.dwg**

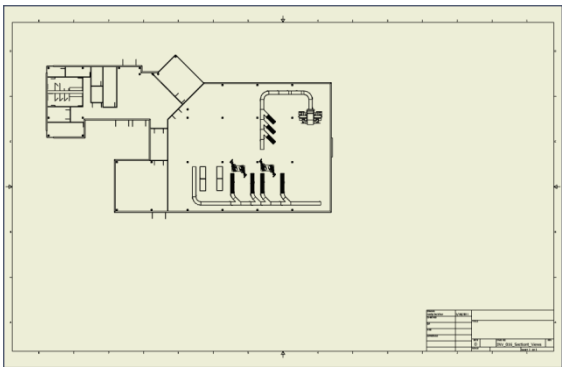

2. Click Place Views tab > Create tab > **Section**.

- Select the view on the sheet as shown.

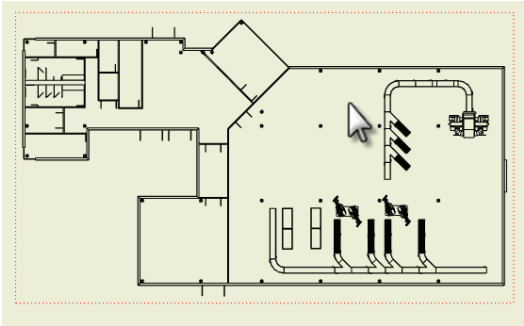

3. Click outside of the building on the left hand side and draw a line thru the building to the right hand side as shown in the image below. Click a second point on the right side of the building.

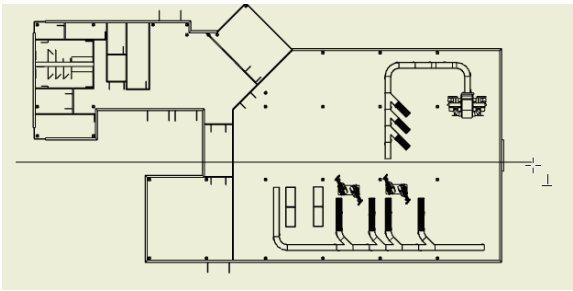

4. Right Click and select **Create** from the menu.

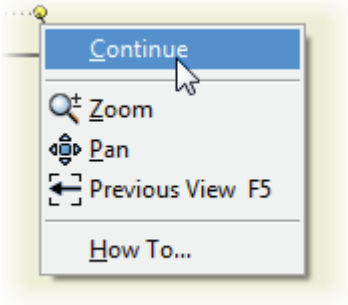

5. In the Section View dialog, select the shaded option for Style.

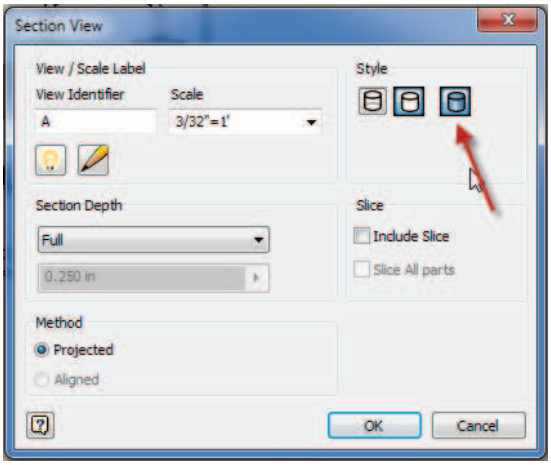

6. Move the section view to the desired location and left click to place the view.

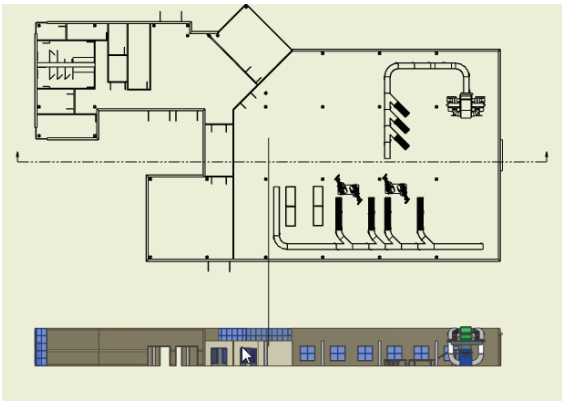

7. The Section View is shown in the following image.

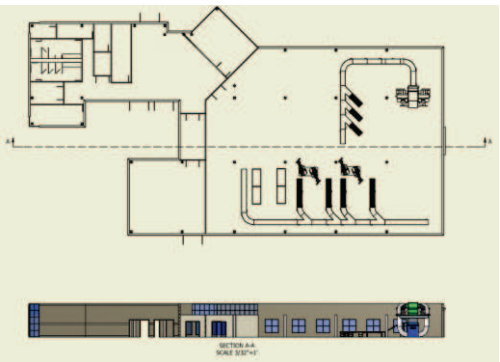

8. Edit the Hatch Pattern
   - Zoom into the section view and review the current hatch pattern.

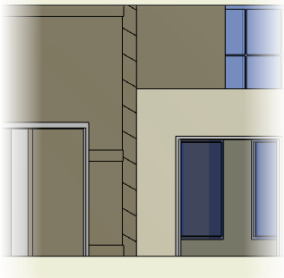

   - Right Click on the Hatch Pattern and select **Edit** from the menu.
     - In the Edit Hatch Pattern dialog, change the scale of the hatch to**.5**.
     - Click **OK**.

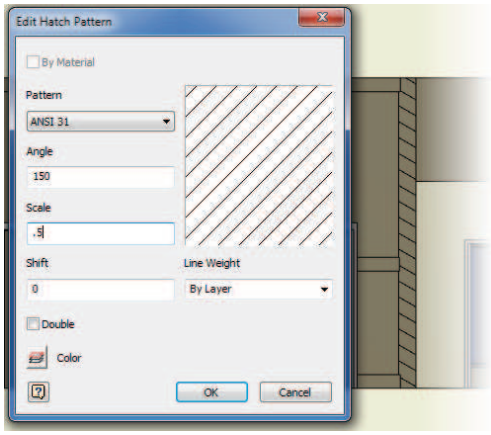

9. Close all Files without saving.
   End of Exercise.

Lesson: Detail Views

This lesson describes creating detail views. As you create 2D drawings for manufacturing, it may be necessary to magnify areas of the drawing. A detail view shows congested areas of a drawing clearly.

In the following illustration, detail views have been created to magnify congested areas of the main view.

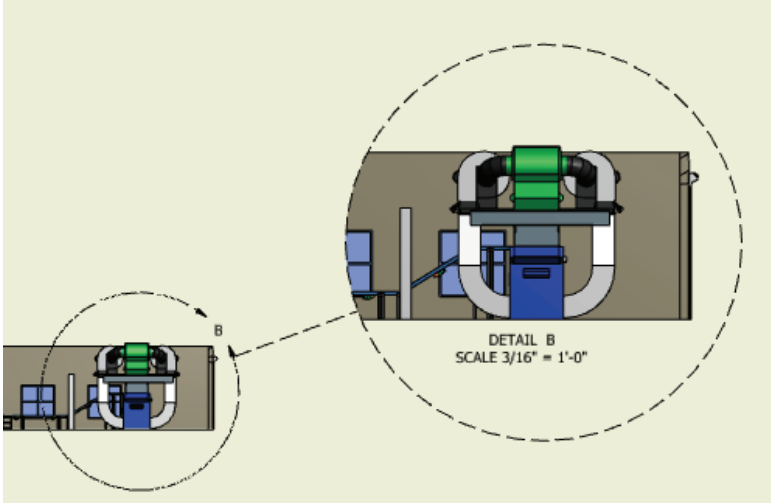

Objectives

After completing this lesson, you will be able to:

- Describe the purpose of detail views.
- Create detail views in drawings.
- Edit the size and location of detail views.

Creating Detail Views

You use the Detail View tool to create detail views of an existing view in the drawing. When you use Detail Views, you define the detailed area by specifying a center point and a rectangular or circular fence. All geometry contained within the detail view rectangle or circle is included in the detail view.

When you create a detail view, you magnify an area of the drawing while creating an associative link between the original view and the detail view. If the geometry being magnified changes in the original view, those changes are reflected in the detail view. Also, the placement and readability of dimensions in these areas of the drawing are simplified.

A detailed view is associated with the main view, and any changes that affect geometry within the main view are reflected in the detail view automatically. Although the view is scaled, as is true of other scaled views, when you place dimensions on geometry within the view, the dimensions reflect the actual geometry size.

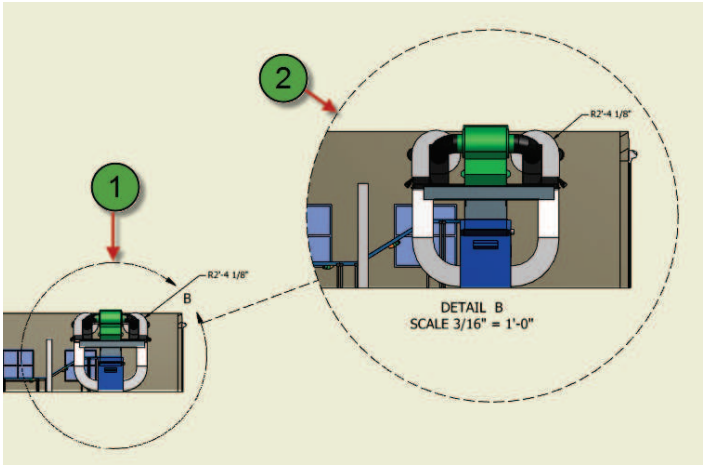

1 Detail view circle

2 Scale detail view with dimensions

Access

Detail View

Ribbon: **Place Views tab > Create panel**

Toolbar: **Drawing Views Panel**
Shortcut Menu: **Create View > Detail View**

Detail View Dialog Box

The following illustration shows the Detail View dialog box.

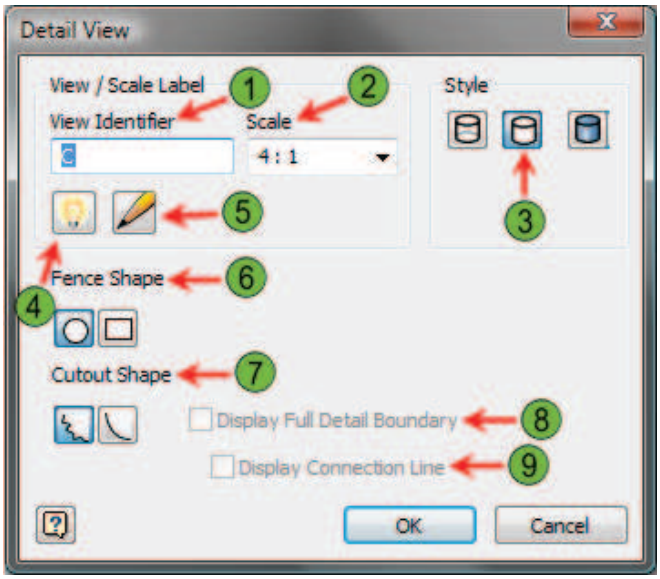

The following options are available in the Detail View dialog box.

	Option	Description
1	**View Identifier**	Use to specify a view label or accept the default value.
2	**Scale**	Use to specify the scale factor for the detail view. Select from the list or manually enter a custom value.
3	**Style**	Determines a rendering style for the view. ▪ Hidden Line ▪ Hidden Line Removed ▪ Shaded
4	**Toggle Label Visibility**	When selected, the view scale label is visible on the sheet.
5	**Edit View Label**	Use to access the Format Text dialog box.
6	**Fence Shape**	Determines a fence shape for the view. ▪ Circular ▪ Rectangular
7	**Cutout Shape**	Specify the cut line as Jagged or Smooth.
8	**Display Full Detail Boundary**	If Smooth cutout shape is selected, select this option to have a boundary drawn around the detail view.
9	**Display Connection Line**	If the Display Full Detail Boundary option is selected, select this option to have a line drawn between the detail view boundary in the parent view and the boundary around the detail view.

Exercise: Create and Edit Detail Views

In this exercise, you create and edit detail views to magnify critical features of the factory layout.

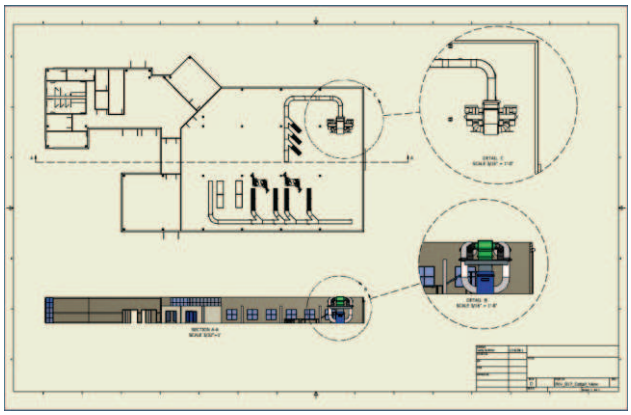

The completed exercise

1. Open **INV_017_Detail_View.dwg**.

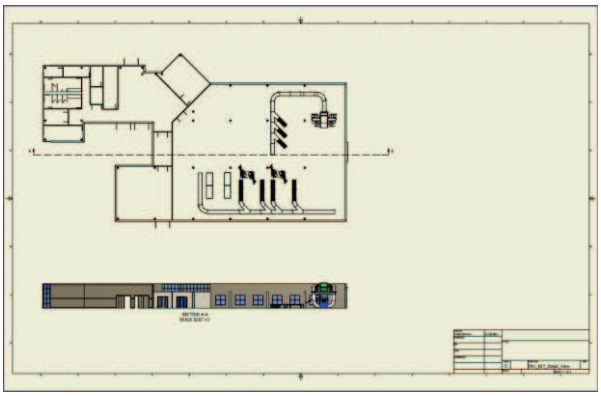

2. Zoom in on the section view.

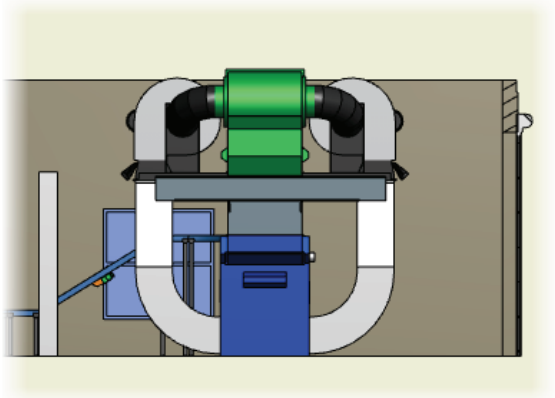

3. To begin to create a detail view from the parent view.
   - Click Place Views tab > Create panel > **Detail View**.
   - Select the section view.
4. In the Detail View dialog box, verify the following values:
   - For Label, Enter **B** (1).
   - For Scale, Enter **3/16”=1’** (2).
   - For Style, Click **Hidden Line Removed** (3).
   - For the Fence Shape select **Circular** (4).
   - For the Cutout Shape select **Smooth** (5).
   - Check the option to **Display Full Detail Boundary** (6)
   - Check the option to **Display Connection Line** (7)

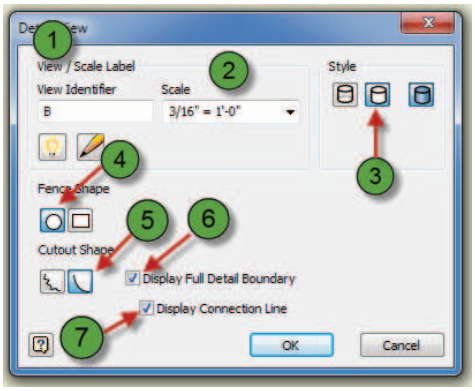

5. For the center point of the fence, select a point near (1). For the endpoint of the fence, select a point near (2).

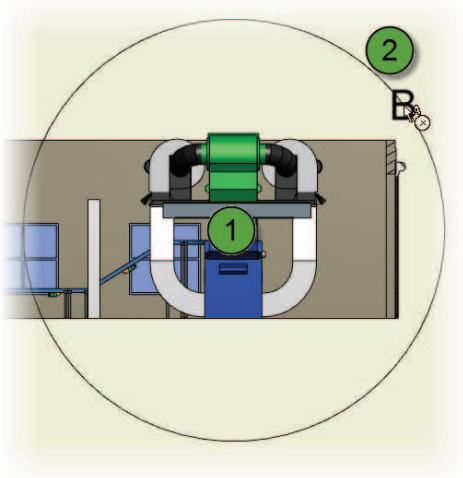

6. When prompted to select a location for the view, select a point as shown in the following illustration.

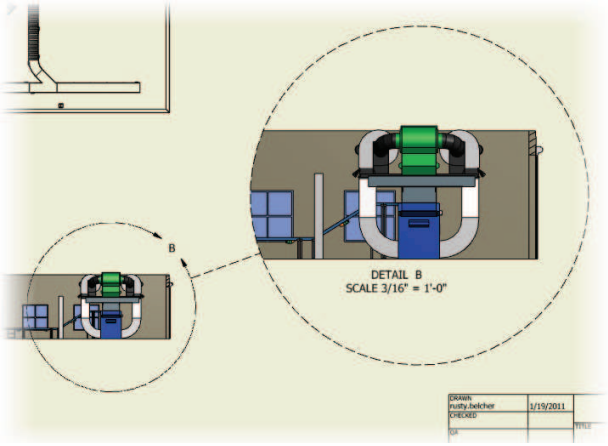

7. Activate the Detail View tool again. Create another detail view (shown in the following image) using the process demonstrated in the previous steps.

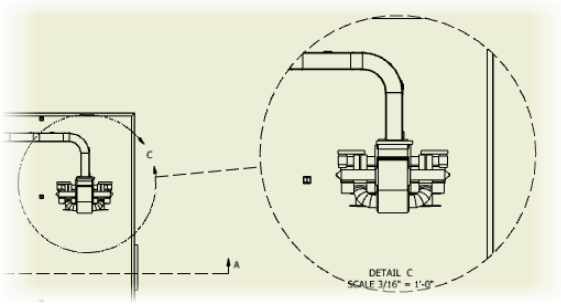

8. Close all files. Do not Save.
End of Exercise.

Lesson: Crop Views

As you create complex drawings, the need to crop view geometry to show only certain areas arises. To display only an area of a drawing view, you need to understand the process for using different boundary shapes to crop drawing views.

The Crop tool provides a straightforward method to show only the area of information that you require.

In the following illustration, the initial view before cropping is shown on the left. The middle image shows the view cropped using a circular default boundary, while the right image shows the view cropped using a closed loop sketch.

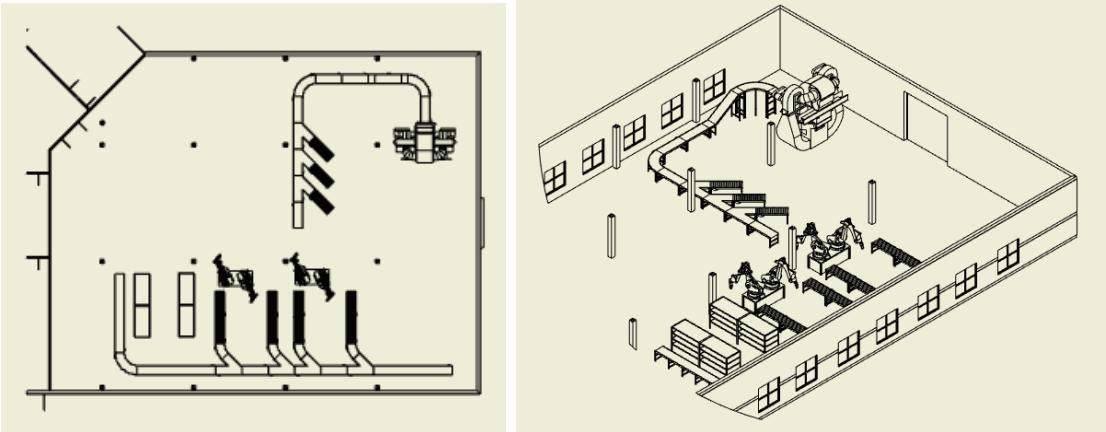

Objectives

After completing this lesson, you will be able to:

- Describe the types of views that can be cropped and the supported display options.
- Crop a drawing view using a circular or rectangular boundary shape.
- Crop a drawing view using a sketched boundary shape.

Creating Quick Cropped Views

To create a quick cropped view, you must first have a view on the drawing sheet that supports cropped views. After starting the Crop tool, you select the view to crop and choose a rectangular or circular boundary. You then define the location and size of the boundary.

In the following illustration, the isometric section view is in the process of being cropped on the left. The results of cropping this view with a rectangular boundary is shown on the right.

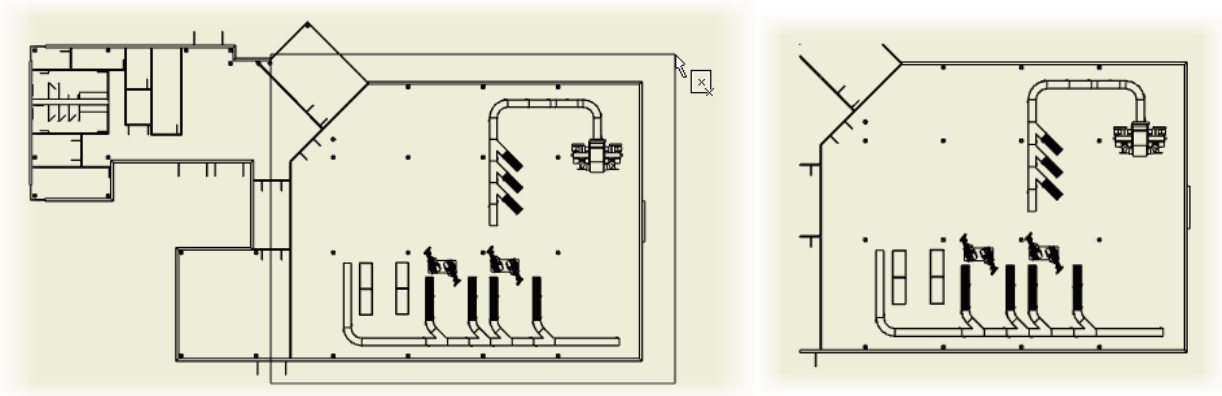

Access

Crop

Ribbon: **Place Views tab > Modify panel**

Toolbar: **Drawing Views Panel > Crop**
Shortcut Menu: **Create View > Crop**

Process: Cropping a View Using a Default Boundary Shape

The following steps give an overview and example of cropping a drawing view using a default boundary shape of circular or rectangular.

1. Start the Crop tool.

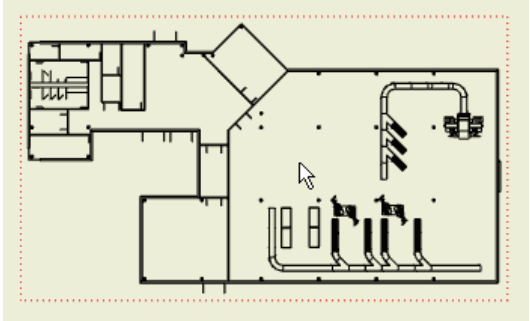

2. Select the view to crop.

3. If the default boundary type (circular or rectangular) is not what you want, select another crop boundary type.

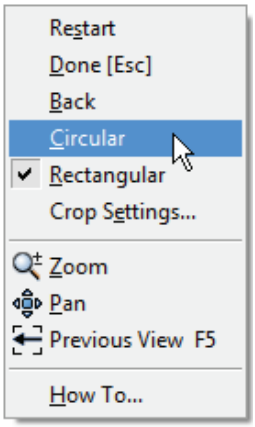

4. Draw the cropping boundary at the location and size that you require. Use opposite corners for a rectangular boundary or the center and radius for a circular boundary.

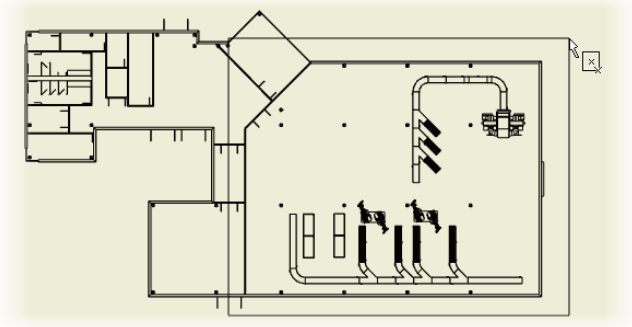

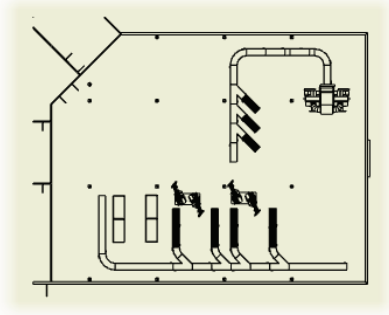

Creating Cropped Views with Sketches

To create a cropped view using a sketch, you must first have a view on the drawing sheet that supports cropped views. You then create a closed loop sketch associated to the drawing view to be cropped. After starting the Crop tool, you select the sketch and the view is cropped.

In the following illustration, a sketch is created in an isometric view. That sketch is then selected using the Crop tool to create the resulting view on the right.

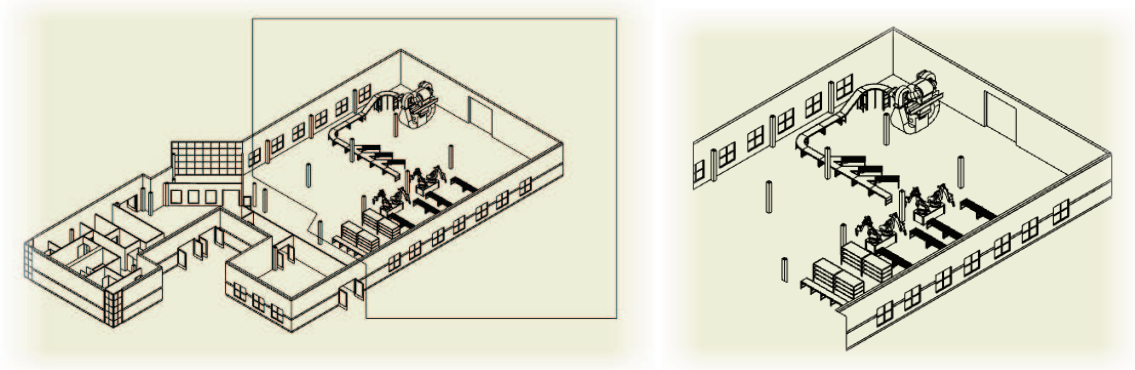

Process: Cropping a View Using a Sketch

The following steps give an overview and example of cropping a drawing view using a closed loop sketch.

1. Click inside the drawing view that you want to crop. Click > Place Views tab > Sketch panel > Sketch to create a sketch associated to the drawing view.

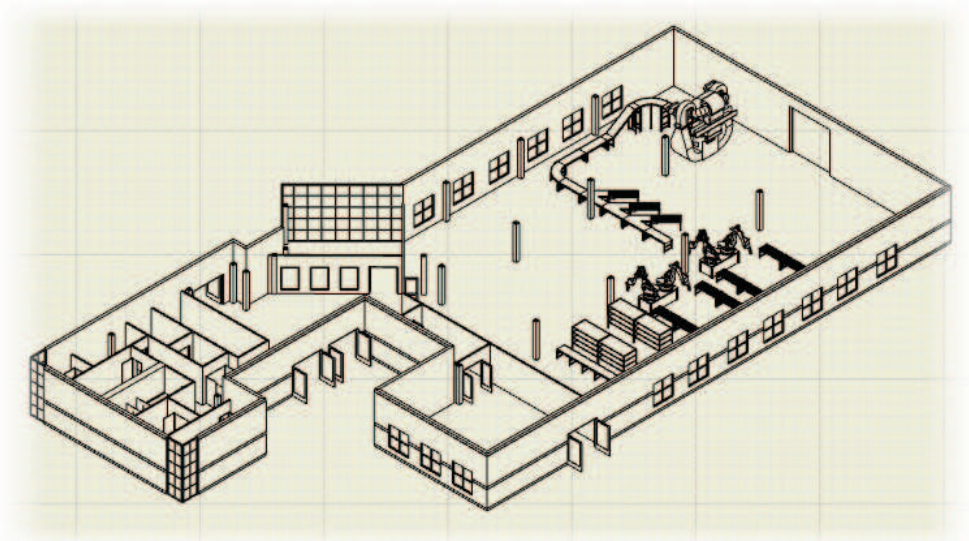

2. In the sketch, create a single closed loop shape using line, arc, or spline segments.

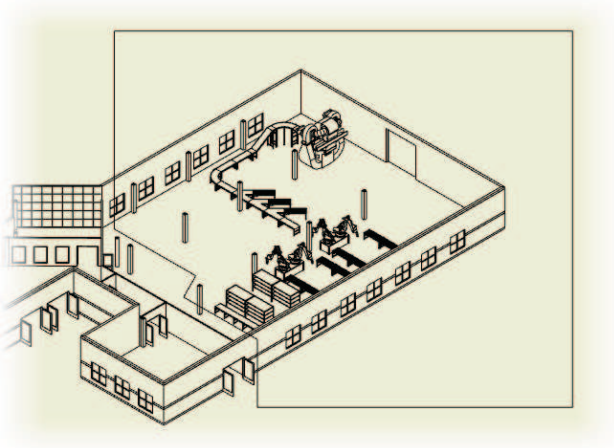

3. Click Place Views tab > Modify panel > Crop. 

4. Select the associated sketch.

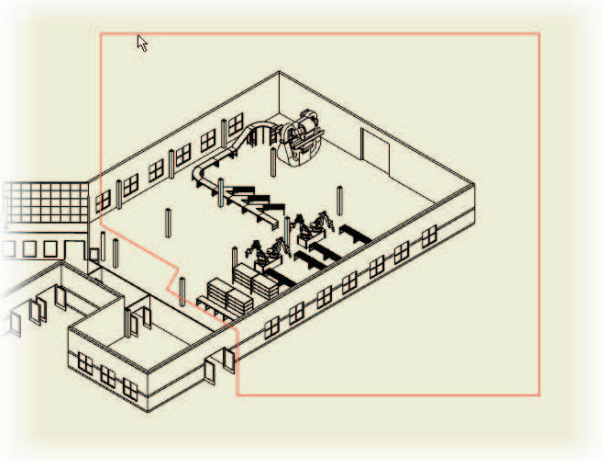

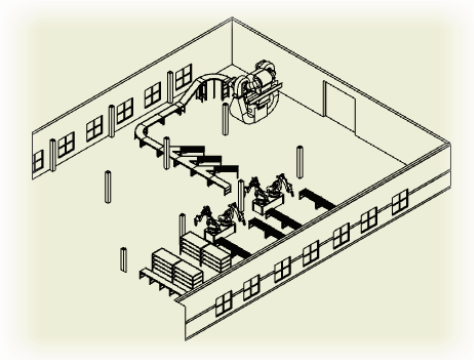

Exercise: Create and Edit Cropped Views

In this exercise, you create cropped views using default and sketch boundaries.

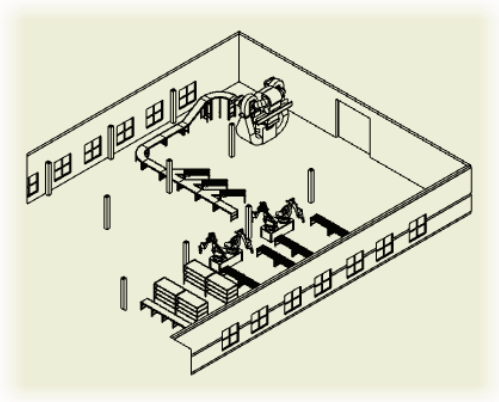

The completed exercise

1. Open **INV_018_Cropped View.dwg**

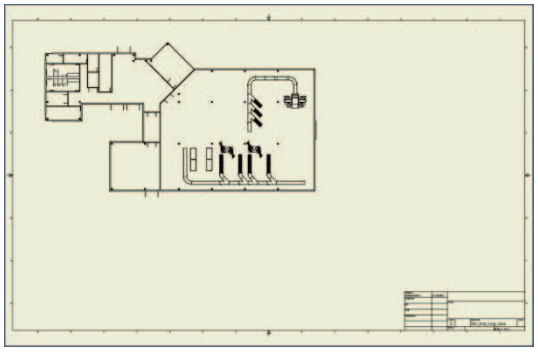

2. To create a rectangular cropped view:
   - Click Place Views tab > Modify panel > **Crop**.
   - Click the Top view.
   - Click and drag a rectangle over the right section of the drawing, as shown.

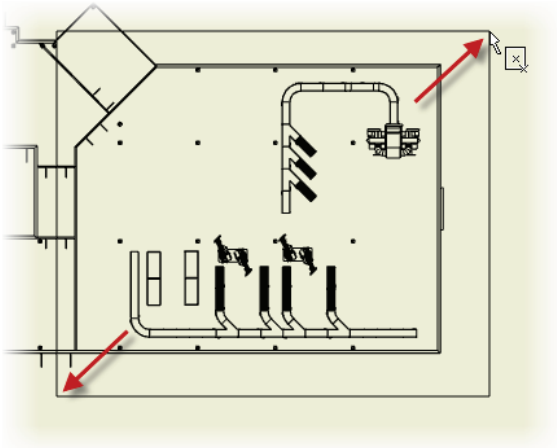

3. The view is cropped to show only the objects inside the defined boundary.

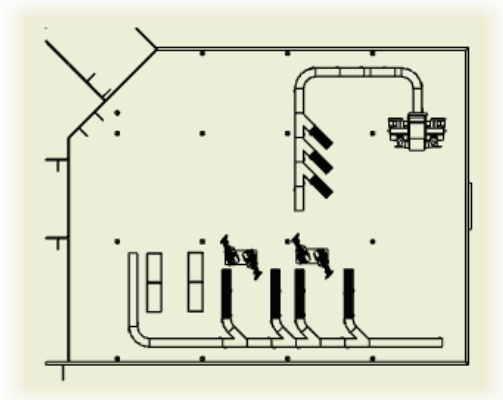

4. Activate the second sheet in the drawing.
   - In the browser, double click the sheet 2 to activate it.

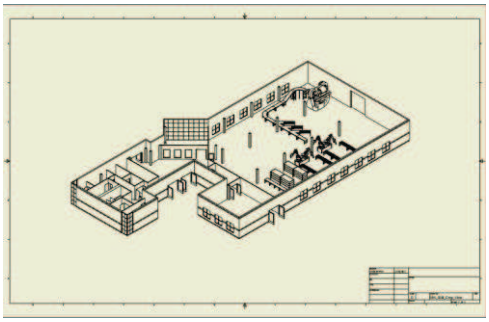

5. To create a sketch based on the view:
   - Select the isometric view.
   - On the Place Views ribbon, click the **Create Sketch** tool
   - Using the line command, draw a the simple sketch shown in the following image.
     Note: Make sure the sketch creates a closed loop.

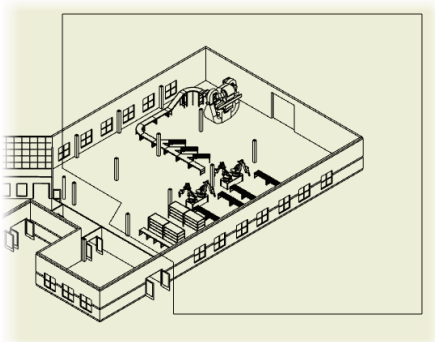

   - On the Sketch ribbon, click **Finish**.

5. On the Place Views ribbon, click the Crop tool.
   - Select the sketch drawn in the previous step.

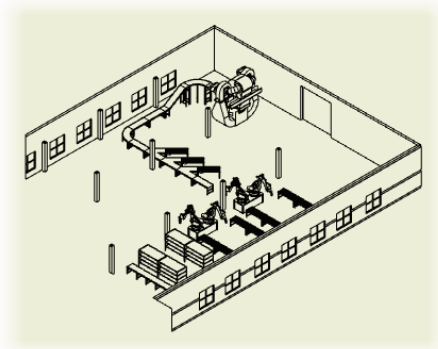

6. Close all files. Do not save.

End of Exercise.

Lesson: Dimensions, Annotations, and Parts Lists

After creating drawing views, you can annotate those views with dimensions, centerlines, and symbols. Production-ready drawings also typically include parts lists and balloons. While traditional annotation methods can be quite tedious, you can quickly and easily include these elements in your drawings using the annotation tools available in Autodesk® Inventor®.

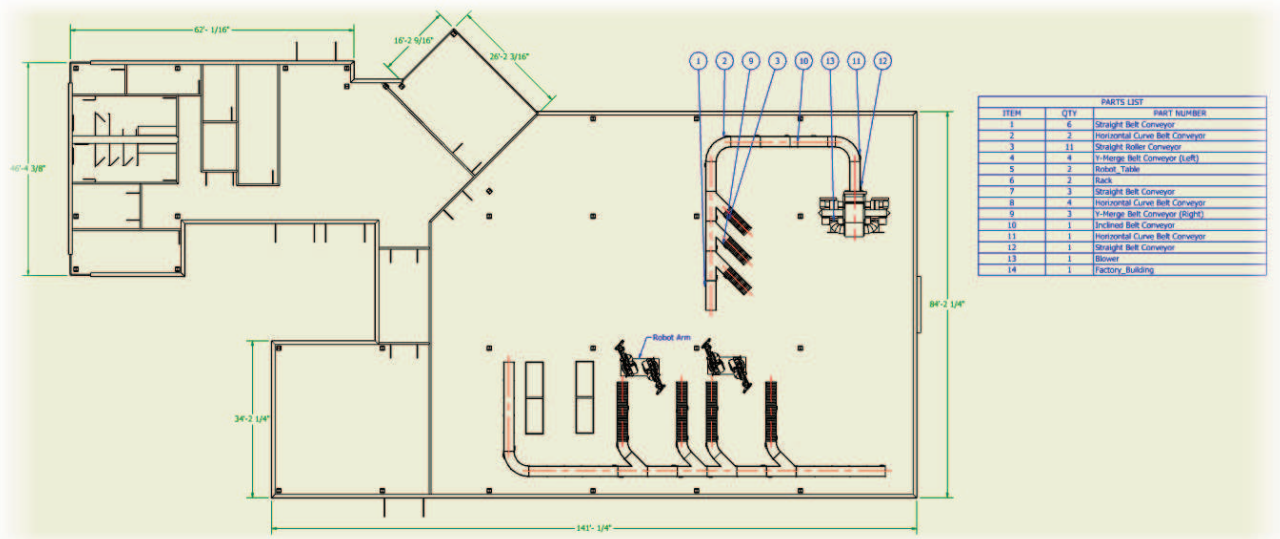

Objectives

After completing this lesson, you will be able to:

- Dimension drawings with manual techniques.
- Add centerlines, center marks and symbols to your drawings.
- Add a Parts List and Balloons to the drawing.

Adding Dimensions

This lesson describes the manual application of dimensions. Dimensions define the size and location of the objects being designed. They are the most important annotation applied to a drawing. Therefore, the application of dimensions is critical to the success of the project.

Dimensions manually applied to drawing views are associated with the object that defines them. Manually placed dimensions provide documentation of the model in the drawing environment. The application of manual dimensions uses general, baseline, and ordinate dimensions.

In the following illustration, the dimensions have been added manually to define the size of the factory facility.

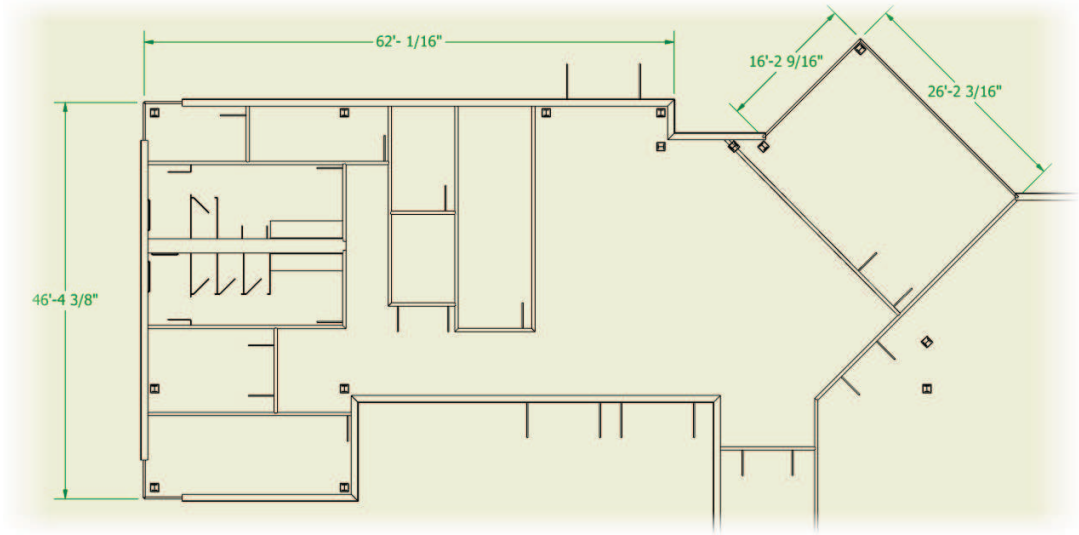

Creating General Dimensions

The General Dimension tool can place many different types of dimensions, depending on the geometry selected. Selecting two parallel lines results in horizontal, vertical, or aligned dimensions; selecting two nonparallel lines results in angle dimensions; and selecting an arc or circle results in radial or diameter dimensions. To obtain a horizontal or vertical dimension between two nonparallel lines, you select one line and the endpoint of the other line, or select two endpoints.

In the following illustration, general dimensions are placed on the drawing to define the location of a factory asset.

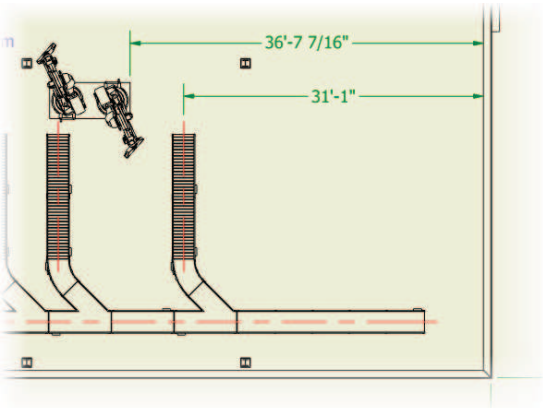

Access

General Dimension

Ribbon: **Annotate tab > Dimension panel**

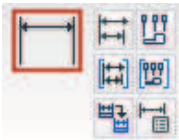

Toolbar: **Drawing Annotation Panel**
Keyboard: **D**

Term	Definition
Horizontal	Creates a horizontal dimension based on the points or segments selected.
Vertical	Creates a vertical dimension based on the points or segments selected.
Aligned	Creates a linear dimension perpendicular to the points or segments selected.

Procedure: Placing General Dimensions

The following steps describe how to place general dimensions on a drawing.

1. Start the General Dimension tool.
2. Select two points or line segments in the drawing view.

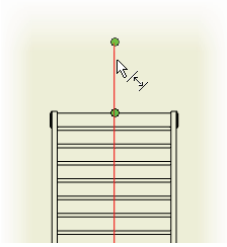

3. Place the dimension.

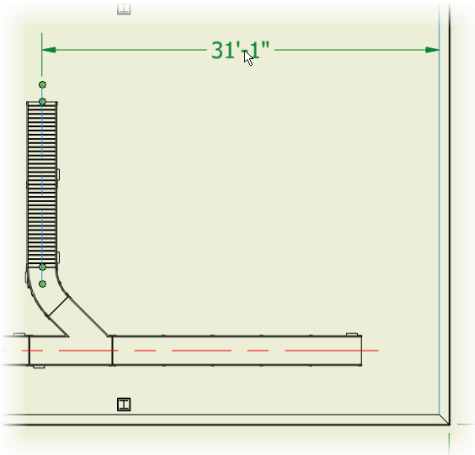

Adding Centerlines

This lesson describes how to add centerlines and leaders to your drawings. These tools help define asset locations on production-ready factory drawings.

The use of centerlines and center marks is critical in the interpretation of symmetrical and cylindrical features in drawings. Symbols aid in defining the manufacturing processes used in creating parts and assemblies. Leaders provide information about the text, symbol, or dimension attached to specific areas on a feature or object.

In the following illustration, centerlines define the location of factory assets.

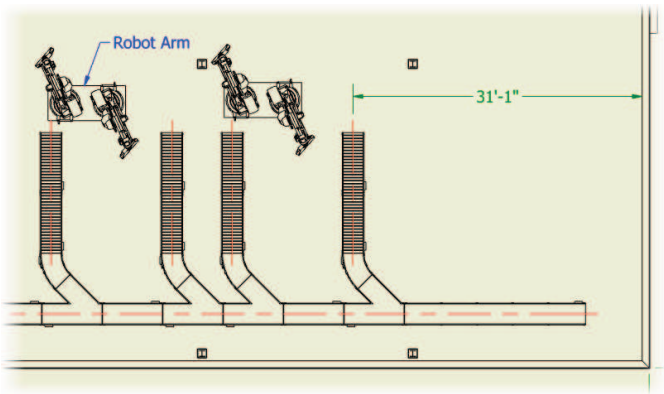

Procedure: Adding Centerlines Manually

The following steps describe how to manually add centerlines to drawings.

1. Start the Centerline tool. In the graphics window, click to place the start point of the centerline.

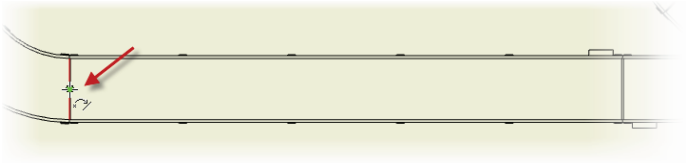

2. Click to place the end point of the centerline.

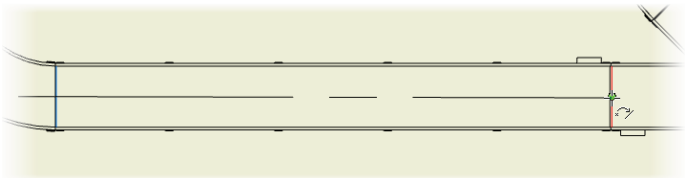

3. Right-click on the centerline and click Create.

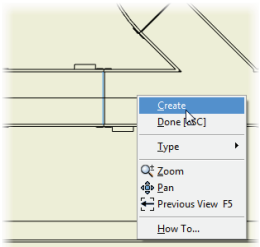

4. Right-click in the graphics window. Click Done.

Adding Parts List and Balloons

This lesson describes how to create and customize parts lists to document the assets in your Factory assembly. The parts list is generated from the assembly bill of materials (BOM) and shows all or only certain parts and subassemblies in the BOM database.

Parts lists play a vital role in the factory documentation process by displaying the assets that make up the lines, and their quantities, parameters, and any other properties that you wish to convey.

In the following illustration, a factory drawing is shown with the associated parts list.

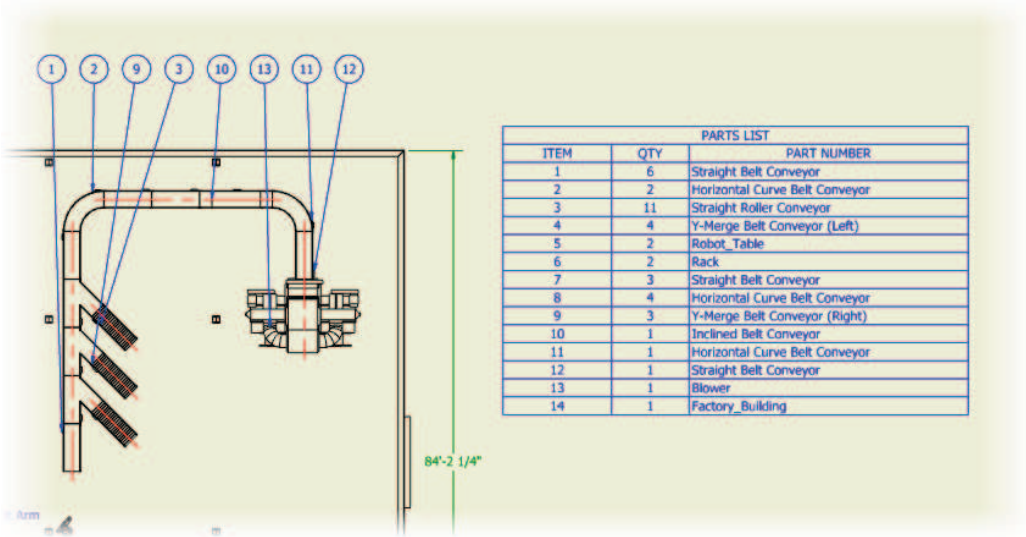

PARTS LIST

ITEM	QTY	PART NUMBER
1	6	Straight Belt Conveyor
2	2	Horizontal Curve Belt Conveyor
3	11	Straight Roller Conveyor
4	4	Y-Merge Belt Conveyor (Left)
5	2	Robot_Table
6	2	Rack
7	3	Straight Belt Conveyor
8	4	Horizontal Curve Belt Conveyor
9	3	Y-Merge Belt Conveyor (Right)
10	1	Inclined Belt Conveyor
11	1	Horizontal Curve Belt Conveyor
12	1	Straight Belt Conveyor
13	1	Blower
14	1	Factory_Building

About Parts Lists

The parts list is generated from the bill of materials database and can be customized to show the columns and information needed to complete the assembly. Formatting such as table layout, column width, and heading names can be customized to give the parts list the exact look that you want.

Parts lists can display four types of information:

- Structured
- Parts only

The following illustration provides a comparison between the parts list and bill of materials database for an assembly.

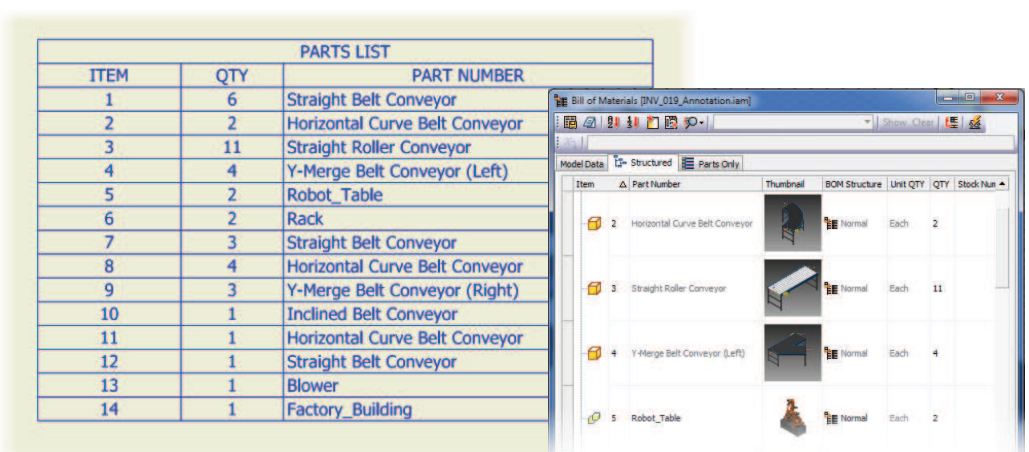

PARTS LIST

ITEM	QTY	PART NUMBER
1	6	Straight Belt Conveyor
2	2	Horizontal Curve Belt Conveyor
3	11	Straight Roller Conveyor
4	4	Y-Merge Belt Conveyor (Left)
5	2	Robot_Table
6	2	Rack
7	3	Straight Belt Conveyor
8	4	Horizontal Curve Belt Conveyor
9	3	Y-Merge Belt Conveyor (Right)
10	1	Inclined Belt Conveyor
11	1	Horizontal Curve Belt Conveyor
12	1	Straight Belt Conveyor
13	1	Blower
14	1	Factory_Building

Creating Parts Lists

You create parts lists by clicking the Annotate tab > Table panel > Parts List. The Parts List dialog box is displayed to reveal the following controls for creating your parts list.

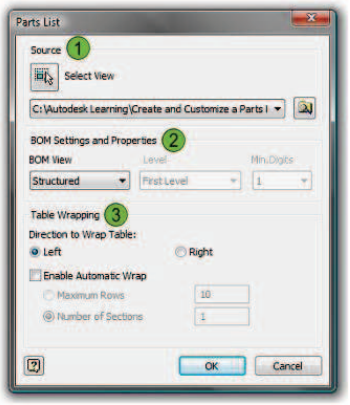

	Option	Description
1	**Source**	This area specifies where to pull the parts list data from, an existing view or a file (IPT, IPN, IAM).
2	**BOM Settings and Properties**	The options in this area dictate how to represent subassemblies and their parts. When the selected view is Structured, the subassemblies show as line items. When the selected view is Parts Only, the parts within the subassemblies show as line items with their Item value containing the delimiter character specified.
3	**Table Wrapping**	In Table Wrapping, set the wrap direction. If you select Enable Automatic Wrap, you can set the maximum number of parts list rows, or number of parts list sections.

Access

Parts List

Ribbon: **Annotate tab > Table panel**

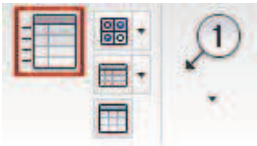

Toolbar: **Drawing Annotation Panel**

Procedure: Creating a Parts List

The following steps describe how to create a parts list in a drawing file.

1. In a drawing file, click Annotate tab > Table panel > Parts List.
2. Select a drawing view and make the appropriate settings in the Parts List dialog box.
3. Position the parts list on the sheet. The parts list is displayed.

Exercise: Adding Annotations

In this exercise, you add centerlines, dimensions, leaders and a parts list to a factory drawing.

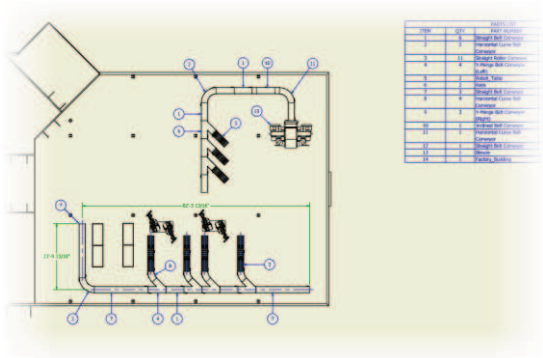

The Completed Exercise

1. Open **INV_019_Annotations.dwg**.

2. Zoom into the Plane view as shown in the following image.

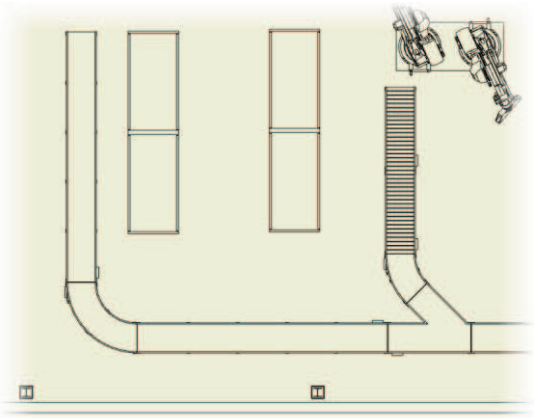

3. Add Centerlines to the Conveyor Lines.
   - On the Annotation ribbon, click the **Centerline** tool

   - Click the two midpoints shown in the following image.

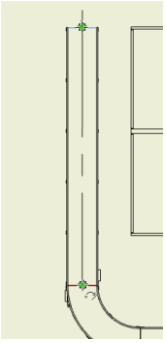

   - Right Click and select **Create** from the menu.
   - Repeat the process adding centerlines to all straight conveyors in the line.

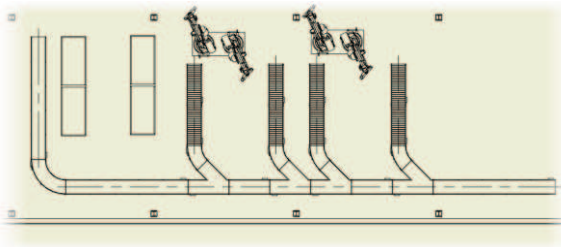

4. Change the color of the Centerline layer.
   - On the Annotate ribbon, click **Edit Layers**.

   - In the Style and Standards Editor dialog, click the color swatch for **Centerline (ANSI)** and set the color to blue.
   - Click **OK**

   - Click **Done**
   - Click **Yes**

5. Add Dimensions documenting the length and width of the Robot Line.
   - On the Annotate ribbon, click the **Dimension** tool.

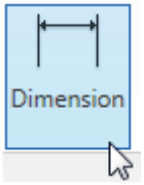

   - In the Style window, at the right end of the ribbon, select **Architecture (ANSI).**

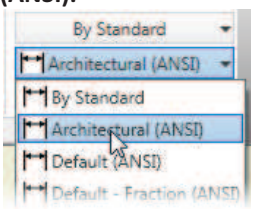

   - Add Dimensions documenting the length and width of the Robot Line.
     Note: You can select centerlines while adding dimensions
     Note: The Dimension command, for drawings, works the same way it does in model sketches.

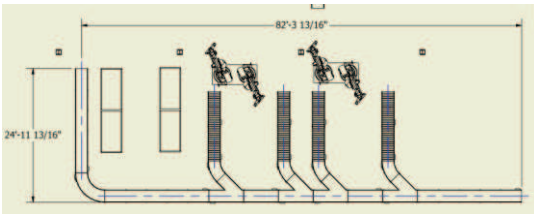

6. Change the Color of the Dimension Layer.
   - Click **Edit Layers.**
   - Click the color swatch for **Dimension (ANSI)** and set the color to dark green.

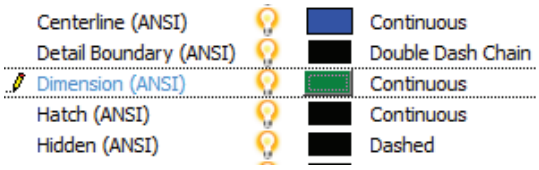

   - Click **OK**
   - Click **Done**
   - Click **Yes**

7. Add a Parts List to the Drawing.
   - On the Annotate ribbon, click the **Parts List** command.

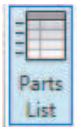

   - Select the Plan View.

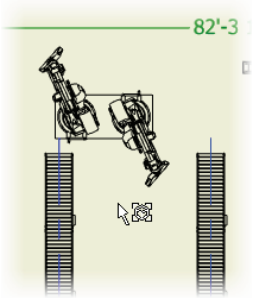

   - Click **OK** and place the parts list as shown below.

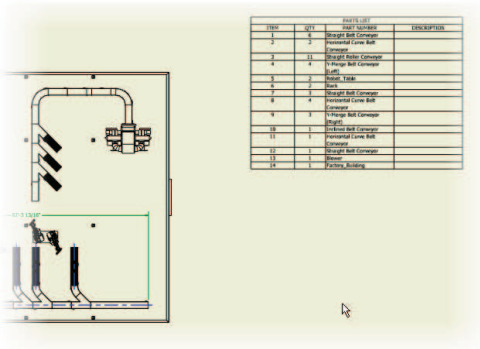

Note: If you Right Click on the Pars list, you can choose the Edit Parts List… The Edit Parts List Dialog offers many options for modifying the parts list. This functionality is not covered in this course.

8. Change the Color of the Symbol Layer.
   - Click **Edit Layers**.
   - Set the color of the **Symbol (ANSI)** layer to blue.

   - Click **OK**
   - Click **Done**
   - Click **Yes**

9. Add a Balloon to the Drawing View.
   - Click the **Balloon** tool.

   - Click the curved conveyor as shown in the following image. This places the arrow head of the Balloon.

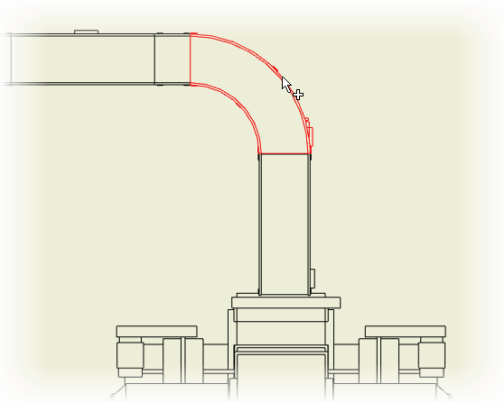

   - Move the cursor away and click to place the balloon as shown.

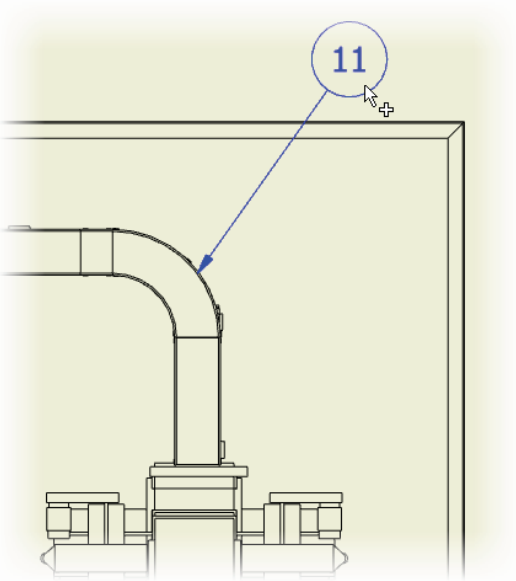

   - Press **ENTER** to finish the Balloon Command.

10. Add Additional Balloons to the Drawing View.
    - Using the previous process, add the additional balloons as shown in the following image.

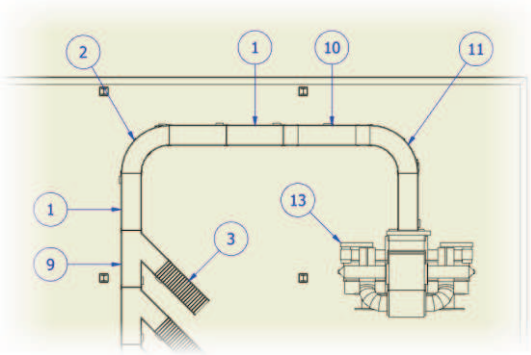

    - Close the drawing without saving
    - End of Exercise.

Lesson: 2D Drawings and AutoCAD Interoperability

The common practice for factory designers currently centers on the use of AutoCAD. Currently most factory layout drawings are created as simple 2D drawings using the AutoCAD application. Many factory designers will incorporate the Factory Design Suite into current design practices and still maintain an AutoCAD centric approach to factory layout.

This lesson will outline the process of creating a factory layout in AutoCAD, bringing it into Inventor (Autodesk Factory Design Suite), building the 3D layout, creating the Inventor drawings, and referencing them back into the original AutoCAD design. This process creates a "round trip" maintaining reference links so drawings can update if changes occur.

The following flow chart depicts the "Round Trip" process, starting in AutoCAD, moving to Inventor Factory Design, and linking back to the original AutoCAD drawing.

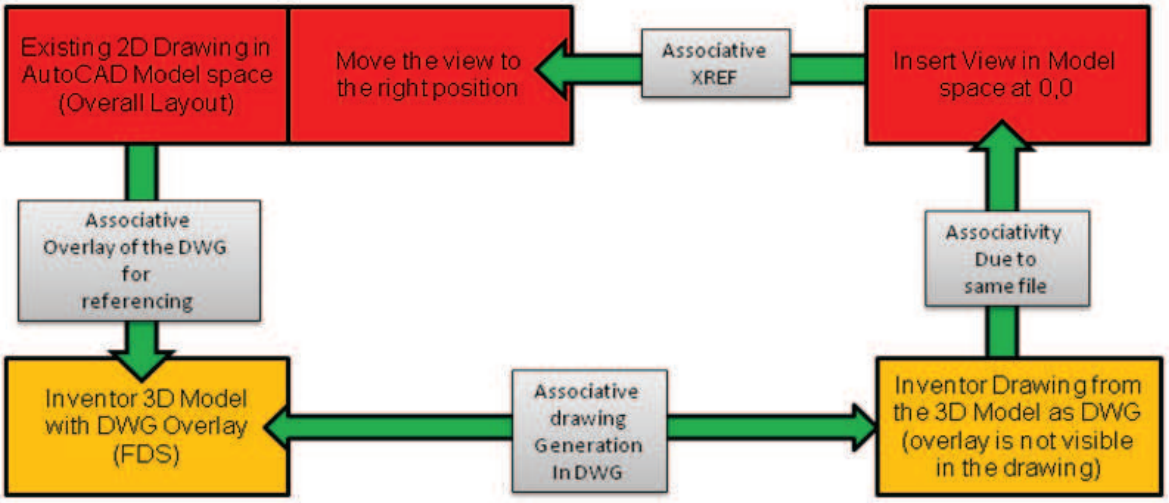

Round Tripping Settings

In order to have a seamless roundtrip without user interaction, we need to set up Inventor in a certain way. Open the Applications Options, on the Manage ribbon, and adjust the options as shown for:

- View justification = Fixed
- View Block insert point = Model Origin

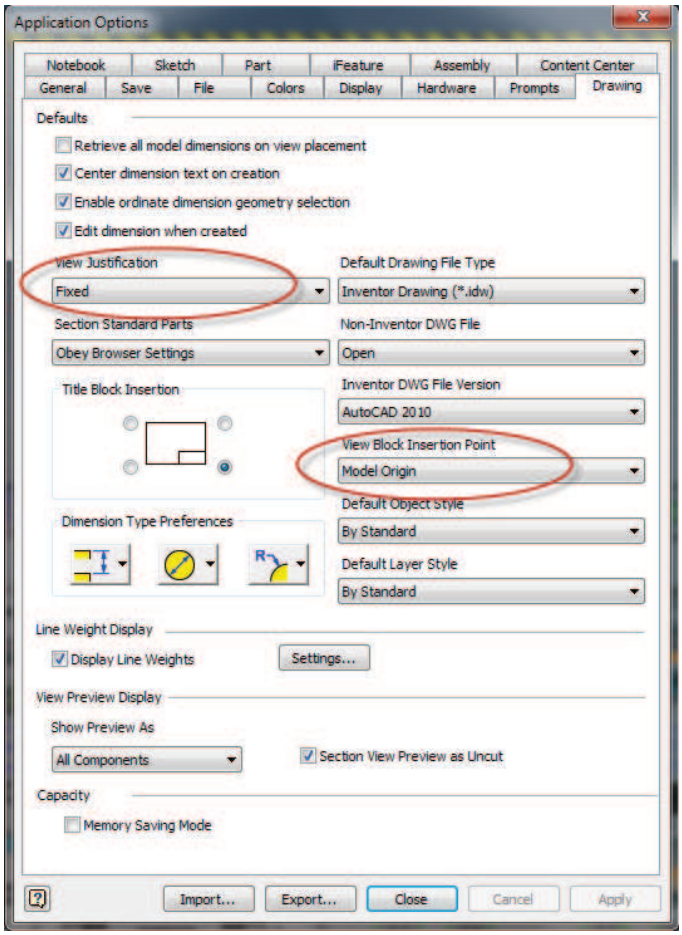

Process for Round Tripping

The process starts in AutoCAD with the original 2D layout of the facility.	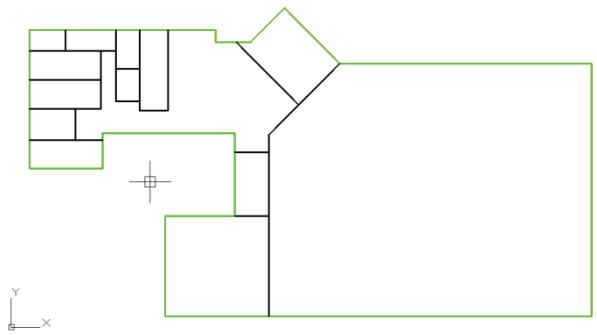
This drawing is used as the DWG Overlay in the Inventor Factory Layout.	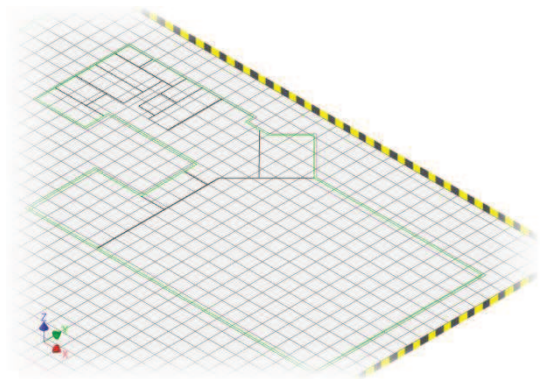
The 3D Factory Layout is Created, based on the DWG Overlay.	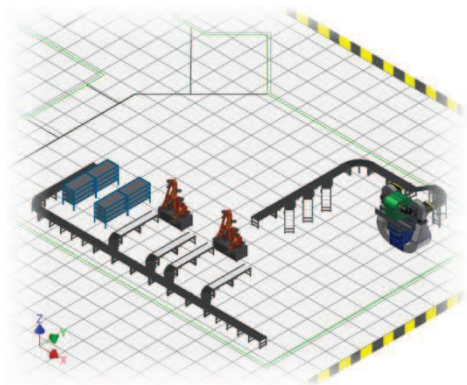
An Inventor Drawing is created from the 3D Factory Layout.	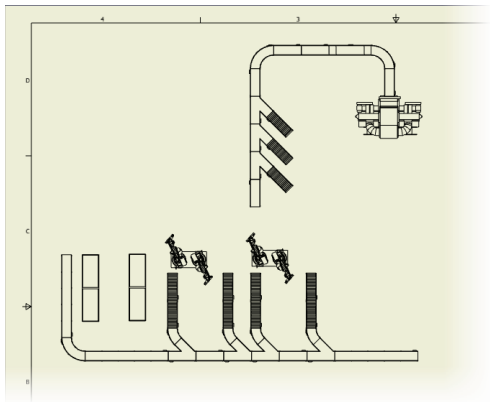

The Inventor Drawing is opened in AutoCAD and the Block created for the drawing view is placed in Model space at 0,0.	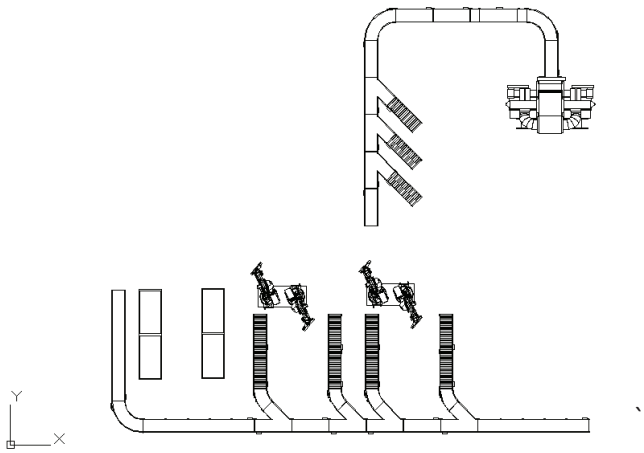
The Inventor Drawing is then inserted into the Original AutoCAD drawing as an External Reference, completing the Round Trip.	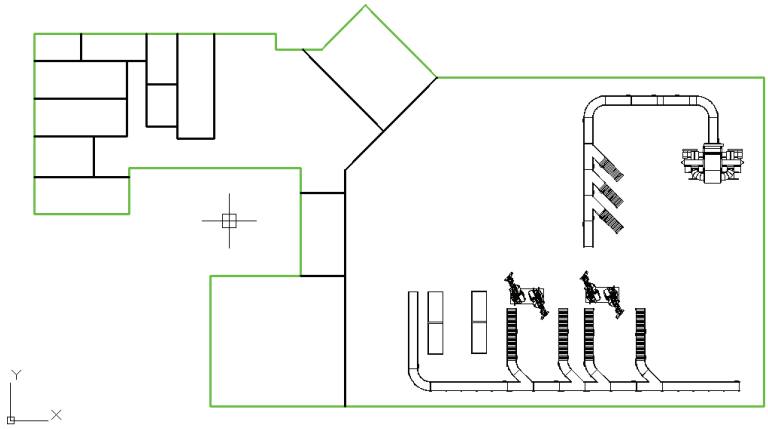

Chapter Summary

In this chapter, you learned how to quickly and easily create drawing views of your 3D factory designs. Learning how to create and edit drawing views is the first step in creating production-ready drawings. In the next chapter, you learn how to annotate your drawing views with dimensions, , centerlines and symbols, and even add bill of material tables to your drawings.

Having completed this chapter, you can:

- Navigate the Autodesk Inventor user interface when creating and editing drawing sheets.
- Create base and projected views of 3D parts and assemblies.
- Create and edit section views.
- Create and edit detail views.
- Create and edit cropped views.
- Add Annotations to Drawings.
- Review the AutoCAD Interoperability with Inventor DWGs.

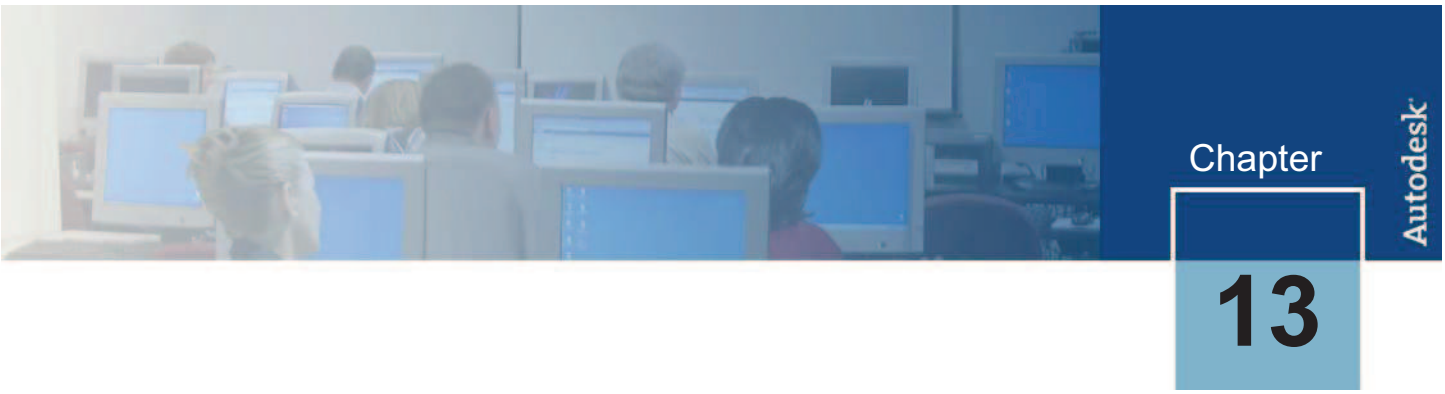

Navisworks – Getting Started

Validating your Factory Layout requires the comparison and analysis of multiple designs from various stakeholders. Your Factory Layout must interface with the Architectural Facility and the Manufacturing designs supplied by the System Integrators or Factory Owners. Putting all this information into a single environment is often beyond the capabilities of most software programs.

Navisworks enables Factory Layout Designers to visualize large complex Layouts with thousands of components such as complete manufacturing facilities, factory floor layouts, production lines & industrial machinery, all in a single digital model by means of real time flythrough and walk through. Customers can combine together CAD data from various design systems regardless of file format or size, for complete Factory visualization and analysis.

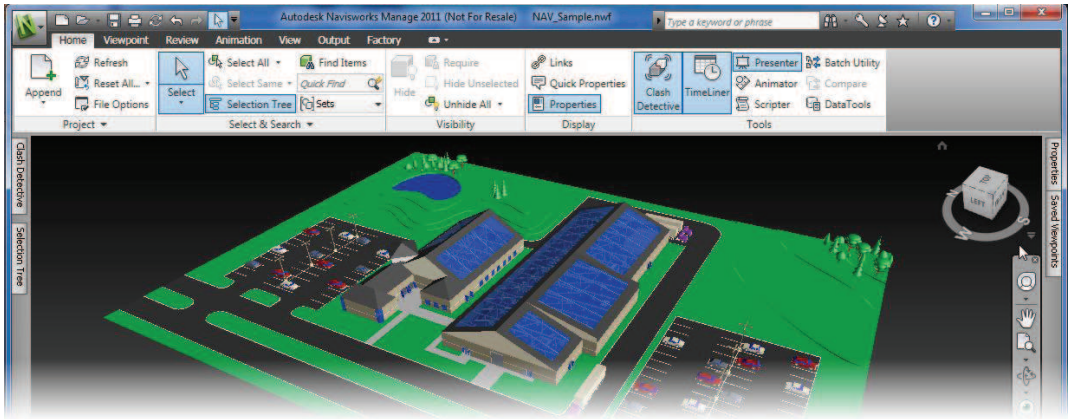

Objectives

After completing this chapter you will:

- Focus on the Navisworks product overview.
- Review the Navisworks user Interface and Workflow.
- Aggregate an entire Factory design from various CAD files.
- Review the file types used by Navisworks.
- Publish an NWD file.

Product Overview

Navisworks revolutionizes design review. Navisworks provides interactive visualization and real-time walkthrough of even the largest and most complex 3D models. Navigating and exploring the design to improve quality and compress the review process is effortless with Navisworks. The post-production value of 3D models is significantly increased by the wide-ranging access that Navisworks offers for investigating and examining a design.

Publisher

The Navisworks Publisher tool provides a way of communicating design intent.
Publisher creates NWD files in which everyone can view and walk through the 3D models in real time, without specialist skills and free from the limitation of pre-programmed animation.
Compressed and secure for distribution, Navisworks review files are faithful to the original native 3D data from which they are created.

TimeLiner

Embracing a fourth dimension of time, the Navisworks TimeLiner tool available in the Autodesk® Navisworks® Simulate and Manage products is aimed at satisfying the growing interest in affordable 4D construction simulation for building and site planning, as well as presentation of time-based modeling. TimeLiner makes it easy to produce time simulations and "what-if" scenarios. While these can be set up solely in Navisworks, you can also link to some major project software, such as Microsoft Project, Primavera (Sure Track/Power Project), Excel (CSV files), and Asta Power Project. TimeLiner also supports any project scheduling software that can export the common MPX format.

Animator and Scripter

With the Navisworks Animator and Scripter tools available in the Autodesk Navisworks Simulate and Manage products, you can animate your model and interact with it. For example, you could animate how a crane moves around a site, or how a car is assembled or dismantled. You can also create interactive scripts, which link your animations to specific events, such as On Key Press or On Collision. For example, the doors will open as you approach them in your model.
You can also link Clash Detective, TimeLiner, and Object Animation together to enable clash testing of fully animated TimeLiner schedules. So, instead of visually inspecting a TimeLiner sequence to make sure, for example, that the moving crane did not collide with a work group, you can run a Clash Detective test.

Presenter

The Navisworks Presenter tool available in the Autodesk Navisworks Simulate and Manage products, is an original visualization solution dedicated to enhancing the real-time experience and the creation of compelling rendered output to communicate design intent.
With Presenter, you can apply textures, materials, and lights quickly to 3D models, and is ideal for fast-moving collaborative review at every stage of the creative process.
With Presenter, everyone can enhance the realism of the interactive environment, and create both still and animated photorealistic rendered output to share a vision of a project and improve understanding and design quality.

Clash Detective

The Navisworks Clash Detective tool available in the Autodesk Navisworks Manage product enables the effective identification, inspection, comment tracking, and reporting of interference in a 3D project model. Clash Detective can eliminate a tedious manual task, with the accompanying risk of human error, to significantly reduce the expensive consequences of incomplete, inaccurate, and poorly coordinated production information.
Project Coordination is simplified with the use of Clash Detective by easily coordinating with the responsible parties to track the clash through the project lifecycle.
For those who seek to complete design projects on time and within budget, the business case for Clash Detective is clear and unequivocal.

Freedom Viewer

Freedom is a separate Navisworks software that provides users with a free 3D viewer to look at Navisworks NWD files. It is the answer for those without design software or specialist skills who want to explore a 3D project model.
Easily open, view, and walk through NWD files, even those streamed across the Internet.

Lesson: User Interface

This lesson describes the Navisworks workspace layout. It also introduces you to basic workflow of aggregating 3D data from various sources into a single digital environment.

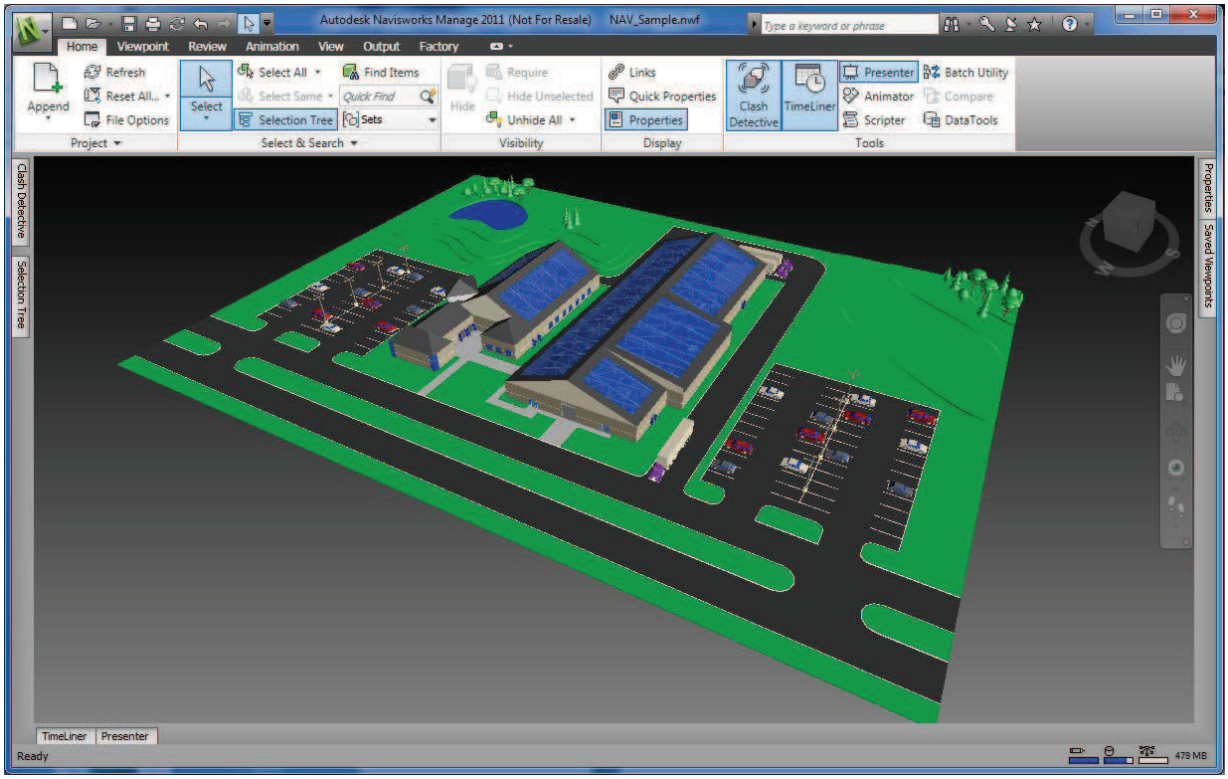

Objectives

After completing this lesson, you will be able to:

- Review the Navisworks User Interface

Workspace

The Navisworks interface is intuitive and easy to learn and use. It contains a number of traditional Windows ribbon elements, such as the Application Menu, ribbon, Quick Access toolbars, and so on.

1. Application Menu	The Application Menu provides access to commonly accessed tools.
2. Ribbon	The ribbon is a palette at the top of the application window that displays task-based tools and controls.
3. Quick Access Toolbar	The Quick Access toolbar displays frequently used commands.
4. Scene View	The Scene View window is used to interact with 3D models.
5. View Cube	ViewCube is used to reorient the current view of a model.
6. Navigation Bar	The Navigation bar is a user interface element where you can access both unified and product-specific navigation tools.
7. Dockable Windows - Open	Dockable Window allow access to model and system information. Window can be pinned open as shown here.
8. Dockable Windows - Closed	Dockable Windows automatically collapse to maximize the scene window size.
9. Status Bar	The Status bar displays command instructions, model status, and system performance.
10. InfoCenter	The InfoCenter is located in the top right-hand corner of Navisworks and provides a number of useful tools for getting to know and searching for help in Navisworks.

Application Menu (1)

The Application Menu provides access to commonly accessed tools. To access its commands, click in the top left-hand corner of Navisworks. The commands available in this menu include: file actions (Open, Save, and Save As), Import and Export commands, the Publish command, and the option to the print or distribute it to other users by email. Within this menu, the Options button provides access to the Options Editor dialog box to customize your global settings.

Ribbon (2)

The ribbon is a palette at the top of the application window that displays task-based tools and controls. The ribbon is divided into tabs, with each tab supporting a specific activity. Within each tab, tools are grouped together into a task-based series of panels.

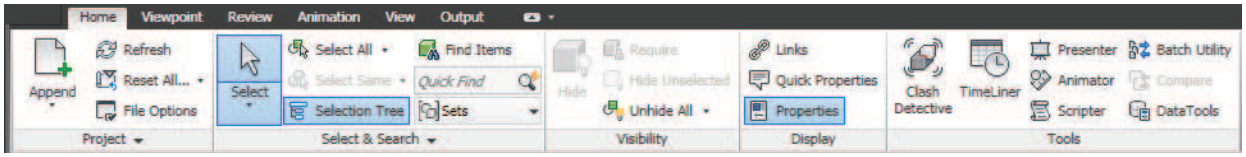

To activate a command on the ribbon, simply navigate to the tab and panel and select the command. Every command on a toolbar includes a tooltip, which describes the function the button activates. Placing the mouse over a button displays a brief instruction on how to use this feature in the Status bar. When some commands are activated, context-sensitive tabs may be added to the ribbon. When active, the context-sensitive tab is highlighted in green to show tools that will only be applied to the selected items. Once the objects are deselected, the context-sensitive tab is removed.

You can customize the ribbon depending on your needs in the following ways:

- To specify which ribbon tabs and panels are displayed, right-click the ribbon and on the shortcut menu, click or clear the names of the tabs or panels.
- You can change the order of ribbon tabs. Click the tab you want to move, drag it to the desired position, and release.
- You can change the order of ribbon panels in a tab. Click the panel you want to move, drag it to the desired position, and release.
- You can control the amount of space the ribbon takes in the application window. There are two buttons to the right of the ribbon tabs, that allow you to choose the ribbon toggle and ribbon minimize states.

Select to cycle between the minimized ribbon states. Once fully compressed, select to resume the full ribbon display state. The minimize ribbon states enable you to minimize to tabs only, minimize to Panel titles only, and minimize to Panel buttons only. The pull-down enables you to control which of the states can be accessed as you are cycling.

Quick Access Toolbar (3)

At the top of the application window, the Quick Access toolbar displays frequently used commands.

- A default set of commands have been included on the ribbon, to enable/disable these defaults select at the end of the Quick Access toolbar, and select the commands that are to be included.
- You can add an unlimited number of buttons to the Quick Access toolbar by selecting the command on its tab, right-clicking, and selecting Add to Quick Access Toolbar. New buttons are added to the right of the default commands.
- You can add separators between the buttons to subdivide the commands. To add a separator, right-click on the Quick Access toolbar in the location where the separator is required, and select Add Separator. Separators can be removed by right-clicking on the separator and selecting Remove from Quick Access Toolbar.
- You can position the Quick Access toolbar either above or below the ribbon. To move its position, select at the end of the Quick Access toolbar and select either Show Below the Ribbon or Show Above the Ribbon.

> Only ribbon commands can be added to the Quick Access toolbar. Commands that extend past the maximum length of the toolbar are displayed as flyouts.

Scene View (4)

The Scene View window is used to interact with 3D models. You can control how much space the Scene View window uses compared to the dockable windows by dragging the edges of the windows as required. Alternatively, you could auto hide the dockable windows, or switch on full screen mode (F11).

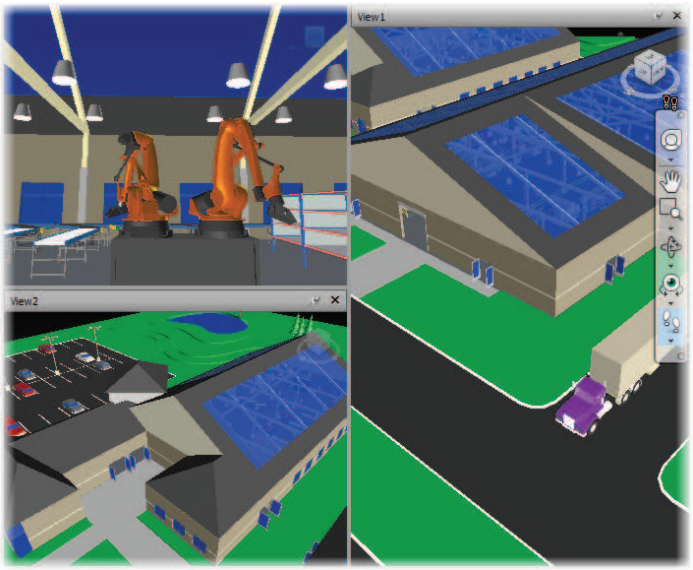

- To split your current view horizontally, expand the Split View command in the Scene View panel on the View tab and click Split Horizontal.
- To split your current view vertically, expand the Split View command in the Scene View panel on the View tab and click Split Vertical.
- Resize a view by dragging the view borders or select Window Size in the View tab and enter the required values.
- Views can be subdivided so that there are horizontal and vertical Scene View windows. This is done by selecting within a Scene View window to activate it and then splitting it again.
- Any of the sub-divided Scene Views have title bar headings. To float a Scene View, select its title bar heading and drag it away from its current location. To redock a floating Scene View, double-click on the title bar heading.
- Split Scene View windows can be set to Auto Hide by selecting the Auto Hide icon on the Scene View's title bar heading. Once auto hidden, it is listed above the Status bar.

ViewCube (5)

ViewCube is used to reorient the current view of a model. You can reorient the view of a model with the ViewCube tool by clicking pre-defined areas on the ViewCube to assign preset views, click and drag on the ViewCube to freely change the view angle of the model, and define and restore the Home view.

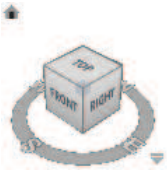

- The ViewCube tool provides twenty-six defined parts to click and change the current view of a model. The twenty-six defined parts are categorized into three groups: corner, edge, and face. Of the twenty-six defined parts, six of the parts represent standard orthogonal views of a model: top, bottom, front, back, left, and right. Orthogonal views are set by clicking one of the faces on the ViewCube tool. You use the other twenty defined parts to access angled views of a model. Clicking one of the corners on the ViewCube tool reorients the current view of the model to a three-quarter view, based on a viewpoint defined by three sides of the model. Clicking one of the edges reorients the view of the model to a half view based on two sides of the model.

When the cursor is over one of the clickable areas of the ViewCube tool, the clickable face, corner, or edge highlights and the cursor changes to an arrow with a small cube to indicate that it is over the ViewCube tool. A tooltip is also displayed. The tooltip describes the action that you can perform based on the location of the cursor over the ViewCube tool.

- You can also click and drag the ViewCube tool to reorient the view of a model to a custom view other than one of the twenty-six predefined parts. As you drag, the cursor changes to indicate that you are reorienting the current view of the model. If you drag the ViewCube tool close to one of the preset orientations, and it is set to snap to the closest view, the ViewCube tool rotates to the closest preset orientation.

> The outline of the ViewCube tool helps you to identify the form of orientation it is in: standard or fixed. When the ViewCube tool is in standard orientation (i.e., not orientated to one of the twenty-six predefined parts) its outline is displayed as dashed. The ViewCube tool is outlined in a solid continuous line when it is constrained to one of the predefined views.

- When you view a model from one of the face views, two roll arrow buttons are displayed near the ViewCube tool. Use the roll arrows to rotate the current view 90 degrees clockwise or counterclockwise around the center of the view.
- When the ViewCube tool is active while viewing a model from one of the face views, four orthogonal triangles are displayed near the ViewCube tool. You use these triangles to switch to one of the adjacent face views.
- Selecting in the top right-hand corner of the ViewCube reorients the Scene View to its default orientation and zoom level.

Additional ViewCube options can be accessed by selecting in the bottom left-hand corner of the ViewCube. These options enable you to define the view setting, define the Home and Front orientations, and access its settings in the Options Editor.

The display of the ViewCube can be set in the Navigation Aids panel on the View tab by enabling/disabling the View Cube command in the Navigation Aids panel.

Navigation Bar (6)

The Navigation bar is a user interface element where you can access both unified and product-specific navigation tools. Unified navigation tools (such as Autodesk® ViewCube® and SteeringWheels®) are those that can be found across many Autodesk products. Product-specific navigation tools are unique to a product. The navigation bar floats over and along one of the sides of the Scene View.

You start navigation tools by clicking one of the buttons on the navigation bar. Many of the tools have varying commands that are compressed. To expand a command, press and hold its icon and select an alternate command.

The top-level Navigation bar commands are as follows. The full suite of commands that are available on the Navigation Bar are discussed in Chapter 2.

Full Navigation Wheel	Collection of wheels that offer rapid switching between specialized navigation tools.
Pan	Activates the pan tool and moves the view parallel to the screen.
Zoom Tools	Set of navigation tools for increasing or decreasing the magnification of the current view of the model.
Orbit Tools	Set of navigation tools for rotating the model around a pivot point while the view remains fixed.
Look Tools	Set of navigation tools for rotating the current view vertically and horizontally.

Walk / **Fly**	Set of navigation tools for moving around the model and controlling realism settings.

The Navigation bar can be customized by selecting at the bottom of the bar. You can enable/disable which commands are displayed, define where the Navigation bar is located in the Scene View window, and access its settings in the Options Editor.

The display of the Navigation bar can be set in the View tab by enabling/disabling the Navigation Bar command in the Navigation Aids panel.

Dockable Windows (7)

Most features are accessible from the dockable windows. To display a dockable window, expand the Windows command in the View tab and choose from the list of available dockable windows. Alternatively, some of the windows can be enabled/disabled directly on tabs. For example, the Selection Tree and Properties windows are available on the Home tab.

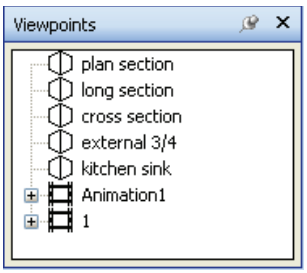

All windows are dockable and resizable, and will automatically lock to specific locations near to where they are moved.

> Holding down the CTRL key when moving a window prevents it from auto docking.

Using the Docking Tool

When you drag a window from its current location towards a new destination on the interface, a docking tool is displayed. The docking icons point towards the four edges of the interface. The options that are available are dependent on the permittable locations for docking.

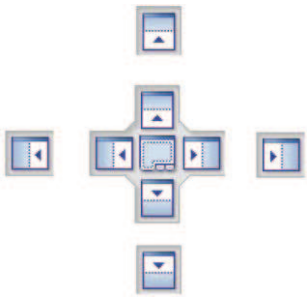

NOTE: These inner docking locations do not allow for pinning/unpinning workspaces. Only the outside docking locations allow pinning.

When the window you are dragging is close to the place where you want it to dock, move the mouse over the corresponding area of the docking tool. You will see an outline of the window appear on the interface. To dock the window, release the mouse button.

Tiling Windows

You can tile windows on the interface. To do this, drag the window you want to tile over the window where you want it to be placed. When a rectangular outline appears, release the mouse button.

Auto Hiding Windows

You can auto hide windows; this keeps them active while maximizing the amount of available screen space. If auto-hide is active, the body of the window disappears when you move the cursor out of it, leaving only the title bar visible. Move the cursor over the title bar to display the entire window again.

To turn auto-hide on, click on the title bar. To turn auto-hide off, click on the title bar.

Status Bar (8)

The Status bar is displayed at the bottom of the Navisworks screen.

The left-hand corner of the Status bar displays short instructions for using the Navisworks features.

The right-hand corner of the Status bar contains four performance indicators that provide constant feedback as to how Navisworks is performing on your computer.

Performance Indicators

The four performance indicators are Scene Drawing, Disk to Memory, Web Server Download, and Memory Usage. 

Scene Drawing Indicator Bar

The Pencil  progress bar indicates how much of the current view is drawn (for example, how much drop-out there is in the current viewpoint). When the progress bar is at 100%, the view is completely drawn, with no drop-out.

While the view is being drawn, the pencil icon will change to yellow. If there is too much data to handle and the computer cannot process this quickly enough for Navisworks, then the pencil icon will change to red, indicating a bottleneck.

Disk to Memory Indicator Bar

The Disk  progress bar indicates how much of the current model is loaded from disk (for example, how much is loaded into memory). When the progress bar is at 100%, the entire model, including geometry and property information, is loaded into memory.

While data is being read, the disk icon will change to yellow. If there is too much data to handle and the computer cannot process this quickly enough for Navisworks, then the disk icon will change to red, indicating a bottleneck.

Web Server Download Indicator Bar

The Web Server progress bar indicates how much of the current model is downloaded when opening a file via a URL (for example, how much has been downloaded from a Web server). When the progress bar is at 100%, the entire model has been downloaded.

While data is being downloaded, the Web Server icon will change to yellow. If there is too much data to handle and your computer cannot process this quickly enough for Navisworks, then the Web Server icon will change to red, indicating a bottleneck.

Memory Usage Indicator

The field to the right of the icons 178 MB displays the amount of memory currently being used by Navisworks.

InfoCenter (9)

The InfoCenter is located in the top right-hand corner of Navisworks and provides a number of useful tools for getting to know and searching for help in Navisworks.

The InfoCenter can be used to search for keywords by typing directly in the entry field. The additional tools enable you to access subscription services, product updates and announcements, and to access the Navisworks Help tool. The Favorites command also provides a convenient way of saving searched topics for future review.

Lesson: Workflow

Navisworks enables Factory Layout Designers to visualize large complex Layouts with thousands of components such as complete manufacturing facilities, factory floor layouts, production lines & industrial machinery, all in a single digital model by means of real time flythrough and walk through. Customers can combine together CAD data from various design systems regardless of file format or size, for complete Factory visualization and analysis.

Navisworks is compatible with all major native design and laser scan file formats. This means that 3D design data from various CAD systems can be combined together to create a single digital model.

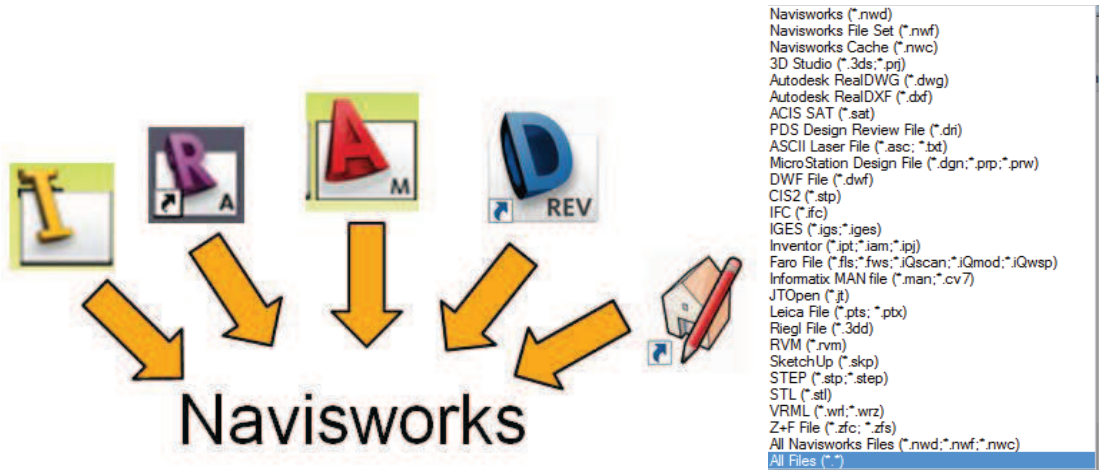

Objectives

After completing this lesson, you will be able to:

- Understand the Navisworks Multi-CAD Data Aggregation Workflow.
- Assemble a Navisworks environment by aggregating 3D designs from various sources.

About File Types

When you open a model file or files in Navisworks, you can save the file as either an NWF file or an NWD file.

NWC File

By default, when Autodesk Navisworks opens a native CAD file (for example, AutoCAD or MicroStation), it first checks in the same directory whether there is a cache file present with the same name as the CAD file but with an .NWC extension. If there is, and this cache file is newer than the native CAD file, then Autodesk Navisworks opens this file instead as it has already been converted to Autodesk Navisworks format and, therefore, opens much quicker.

NWF File

An NWF file contains the review markups, but no geometry. Instead, it includes links (acts as a pointer) to the original native CAD drawing files (as listed in the Selection Tree). This means an NWF is considerably smaller in file size than an NWD.

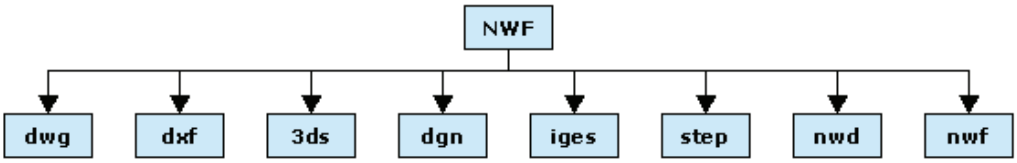

Generally, you should use NWF files whenever multiple files are brought together to create the scene, such as xrefs in AutoCAD®. This way, whenever one file changes, the whole model does not have to be re-published, only the file that has changed needs to be re-read.
NWF files can also be used as the design review “buffer” for NWD files. Comments, views, redlining, animations, material overrides, and clash tests can all be saved and added to an NWF file. The NWD files may need to be re-published due to changes throughout the design process.

NWD File

An NWD file is a fully published Navisworks file containing all geometry and review markups. An NWD file can be thought of as a “snapshot” of the current state of the model and can be viewed in both Navisworks and Freedom (the Navisworks free viewer). An NWD file is created with the Publish command, which is accessed by clicking Application Menu  > Publish, or by selecting the Output tab and clicking NWD  on the Publish panel. The file can also include features such as password access and file expiration dates.

Procedure: To Save as an NWF or NWD File

An NWD file can be saved using the normal Save As procedure. However, there are additional features available if you use the Publish command. For more information, see Publish.

1.	Click Application Menu > Save As.
2.	In the Save As dialog box, in the Save as type drop-down list, select NWD or NWF.
3.	Browse to the required directory then add an appropriate file name and click Save. **Tip:** If a file will need to be read using an earlier version (2009 or 2010) of Navisworks, it should be saved as that version type.

Merging NWF Files

An NWD file may be sent by a project coordinator to multiple parties for review. Each party will add review markups and data to the model, which may include any combination of viewpoints, comments, redlines, Clash Detective results, TimeLiner schedules, Presenter materials, and so on.
Each party can save their review session as an NWF file that references the original NWD file. The project coordinator can then merge all of the NWF files into a single file, duplicating neither the NWD file (referenced by all NWFs) nor any other review markup that is common to all NWFs.

Typical Navisworks Data Workflow

The following illustration maps the typical Navisworks Data Workflow.

- Original data is created in various CAD applications.
- Navisworks is used to open the designs creating a NWC cache file. The cache files are automatically created and stored alongside the original work. As long as the NWC file is newer than the original data, it is used for upstream design. If the original data is modified, a new NWC file will be created during the next reference operation.
- Once the original data is translated into Navisworks, it can be saved as an NWF file. The NWF file simply references the original data (NWC). The NWF file only contains unique information like user viewpoints, redline markups, animations, and simulations.
- If necessary, a standalone NWD file can be created embedding all necessary geometry, viewpoint, and markup information into a single highly compressed file.

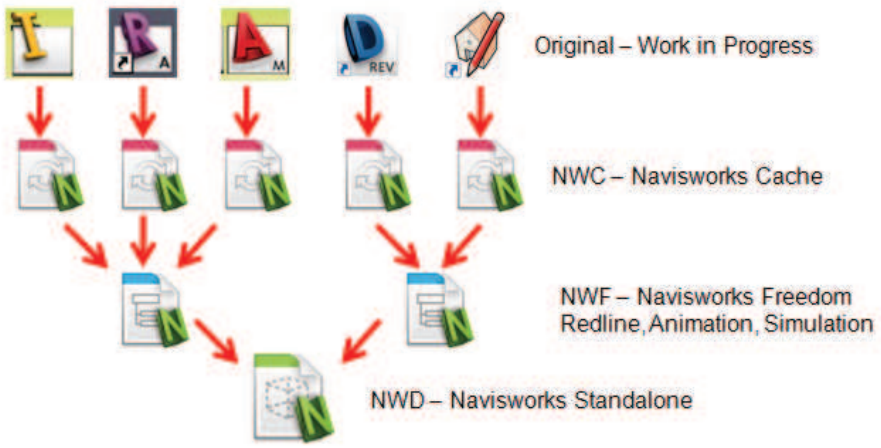

Exercise: Data Aggregation

In this exercise, you create a Navisworks model by combining original data from various CAD files or sources.

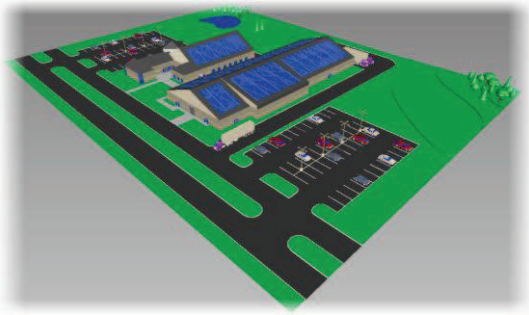

The Completed Exercise

1. Open a file with Navisworks.
   - On the Navisworks application menu, click **Open**.

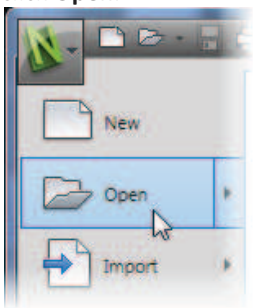

   - ***Select NAV_001_Factory_Lines.iam*** and click open.
   - When the model appears, Left-Click in the background to deselect.

2. View the entire model using Zoom All, and the View Cube.
   - On the View Cube, click the Upper Left corner on the Front face.

   - On the Navigation Bar, expand the zoom tool and select **Zoom All**.

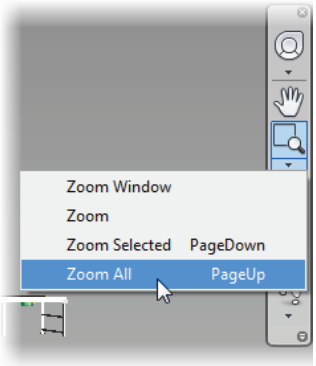

   - The Scene should appear as shown in the following image.

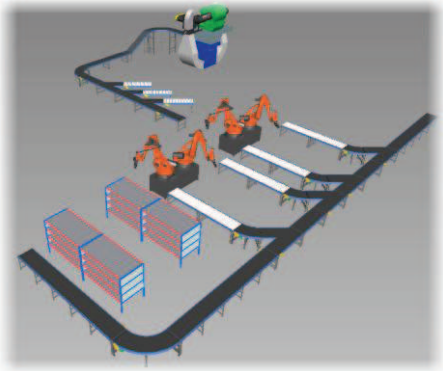

3. Append another file to the Navisworks environment.
   - On the Home ribbon, click the Append tool.

   - Select **NAV_001_Conveyor_1.iam** and click Open.
   - Once the new model is displayed, Click the **Zoom All** tool again.
   - Click in the background to deselect.

4. Repeat the previous step appending the following files.
   Note: Multiple files may be appended at the same time.
   - **NAV_001_Robot_Line.iam**
   - **NAV_001_Packaging_Line.iam**
   - **NAV_001_Machining_Line.iam**
   - **NAV_001_Inspection_Line.iam**
   - **NAV_001_Factory_Out_Building.iam**
   - **NAV_001_Factory_Building.iam**
   - **NAV_001_Robot_Line.iam**
   - **NAV_001_Civil_Design**
   - Click in the background to deselect.
   - Click **Zoom All**
   - The Scene should appear as shown in the following image.

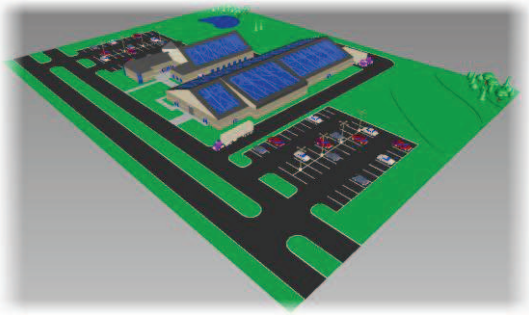

5. Save the entire design as an NWF file.
   - On the Application menu, click the **Save** tool.

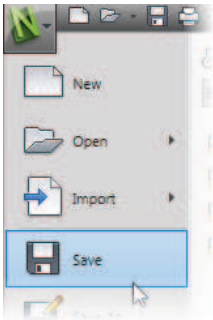

   - In the Save As dialog, save the file as **NAV_001_Factory.nwf**.
     Note: NWF is the default file format for work in progress designs.
   - Start a New Navisworks file by clicking the **New** tool on the application menu.

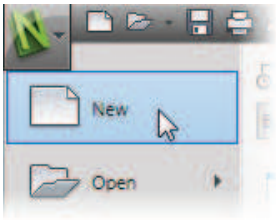

6. Open the previous file.
   - On the application menu, click the **Open** tool.

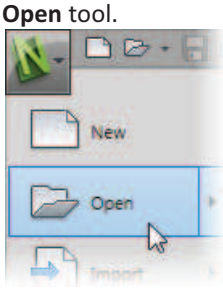

   - Note the existence of .nwc files just below each of the original cad files used in the previous step. These files contain the translation information created during the initial import.

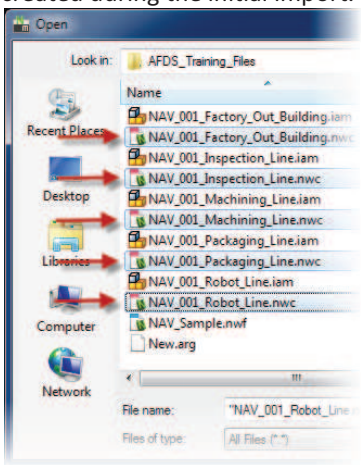

   - Select **NAV_001_Factory.nwf** and click open.
   - Notice how fast the file opens. At this point, the NWC cache files (automatically generated in the previous steps) are newer than the original CAD files. If the NWC files are newer than the supporting CAD files they are used during file open to speed up performance.
   - If necessary, click in the background to deselect.

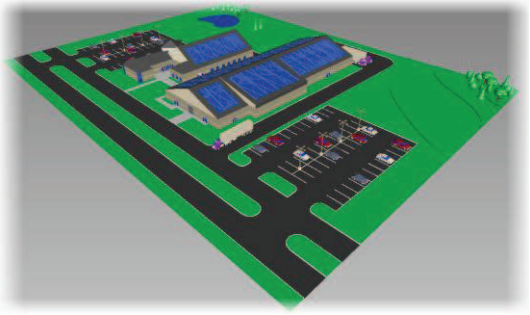

   - Click File New and do not save.
   - End of Exercise.

Lesson: Publishing an NWD File

With Navisworks Publisher, you can take a “snapshot” of the model at any time. This can then be issued to other members of the design team, who may not be CAD users, but who need to view the 3D model. NWD files can be viewed in Navisworks for full design review, or with the Navisworks Freedom free viewer for a simple real-time walkthrough. There is also the option for entering publication information that is saved with the file. This includes password protection and file expiration options.

Procedure: To Publish an NWD File

1.	In Navisworks, open the file that is to be published.
2.	Click Application Menu > Publish or select the Output tab and click NWD on the Publish panel.
3.	In the Publish dialog box (shown below), enter information in the Title, Subject, Author, Publisher, Published For, Copyright, Keywords, and Comments fields, as needed. The additional commands described below can also be set, as needed.
4.	Click OK.
5.	In the Save As window, browse to the required location, and enter a file name. (The name must be different if saved in the same folder as the original.) Click Save. The published file can be viewed in Navisworks or Freedom.

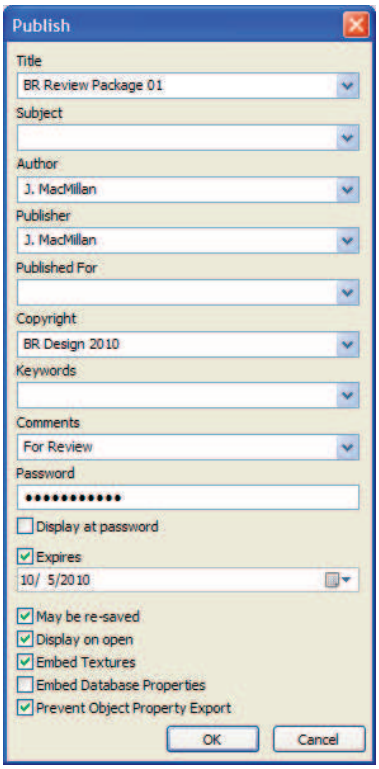

Publish Dialog Box Options

Option	Description
Password	Sets up a password if the file is to be protected and only accessed by certain personnel. (The password will need to be passed to those people.) By default, this dialog box, including the entered information, will not be displayed until after the password has been entered and accepted. (See also Display on open option.)
Display at password	Specifies that the Publish dialog box, including the entered information, is to be displayed with the Password field.
Expires	Specifies an expiration date for the file. This can prevent the old files being used. After the expiration date is passed, the file cannot be opened.
May be re-saved	Allows further changes to be made to a file. By default, a published file cannot be re-saved. This prevents changes being added to this publication.
Display on open	Specifies that the Publish dialog box is displayed when the file is opened. By default, the Publish dialog box, with entered information, is not displayed unless the Display at Password box or the Display on open box is checked.
Embed Textures	Enables textures to be embedded in the one project file. If textures have been added to the model, these can be embedded in the file or it will be saved as a separate file (in the same folder). The benefits of using the Embed Textures option is that there is only one published project file and the textures, including any custom or imported textures, will benefit from the security features of Publisher.
Embed Database Properties	Enables all the linked database properties to be embedded in the project file. This feature enables any object properties accessed via an external database to be embedded in the NWD as normal properties. This adds value to database linkage as well as NWD publishing, giving a quick and easy way of getting a large amount of database data into the model, which is then viewable by all.
Prevent Object Property Export	Prevents inclusion of the object properties from any native CAD package in the published file. This is intended primarily for protection of intellectual property.

Exercise: Publishing an NWD File.

In this exercise, you publish a stand-alone NWD file containing all referenced geometry. The NWD file may be e-mailed to other members of your collaborative design team.
Note: The NWD file does not maintain a relationship to the original CAD files and must be treated as a "Snap Shot" of the design at a specific time.

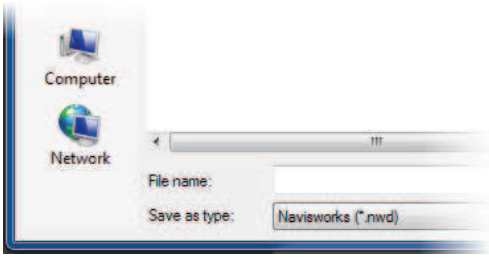

The Completed Exercise

1. First Objective
   - Open **NAV_002_Factory.nwf**.

2. Start the Publish Command.
   - On the application menu, click the **Publish** Command.

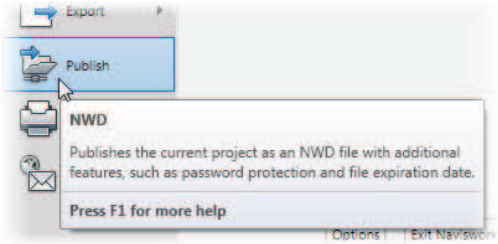

3. In the Publish Dialog, do the following...
   - For Title, enter **Factory Site**.
   - For Subject, enter **Sample Factory**.
   - For Author, enter your name.
   - For Publisher, enter your company.
   - For Published For, enter your customer name.
   - Review all other fields, but leave them blank.
   - Click **OK**.

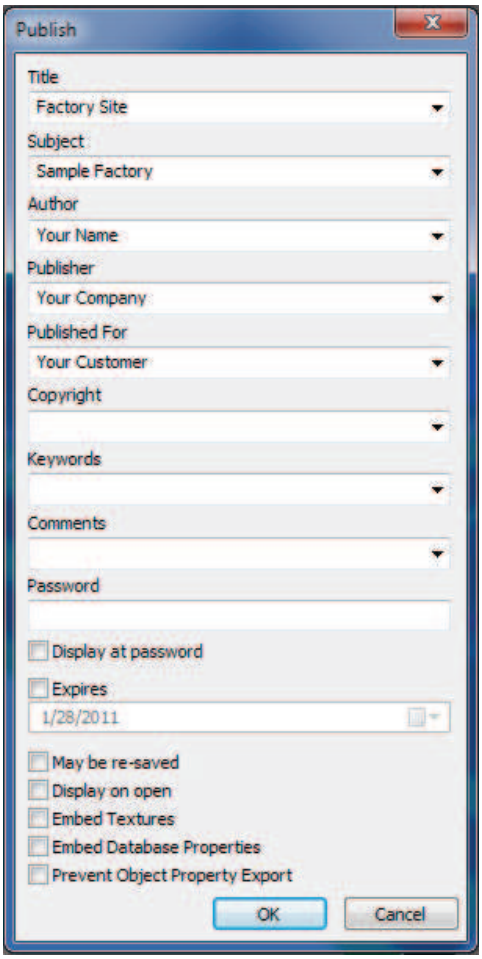

4. In the Save As dialog, save the NWD file in the Training Files directory as **NAV_002_Factory.nwd**.
   - **Optional**: check the file size of the NWD file created in this exercise.
   - Start a New file without saving.
   - End of Exercise.

Chapter Summary

This chapter presented the Navisworks user interface and demonstrated basic workflows for loading CAD models from various sources into the Navisworks environment. The supporting file types used by Navisworks were also discussed.

Having completed this chapter, you can:

- Focus on the Navisworks product overview.
- Review the Navisworks user Interface and Workflow.
- Aggregate an entire Factory design from various CAD files.
- Review the file types used by Navisworks.
- Publish an NWD file.

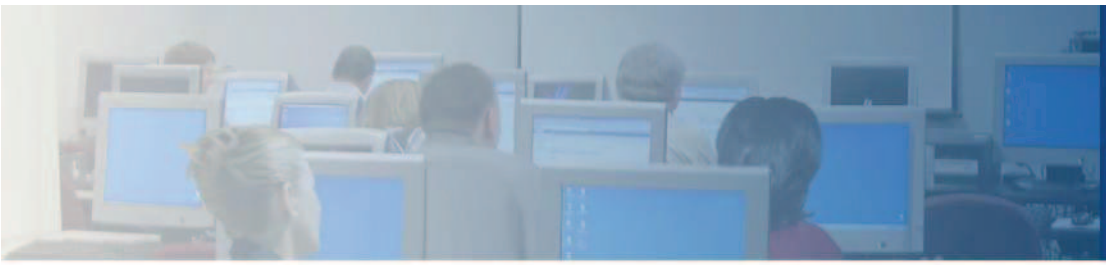

Chapter

14

Visualization / Digital Mockup

Navisworks enables Factory Layout Designers to visualize large complex Layouts with thousands of components such as complete manufacturing facilities, factory floor layouts, production lines & industrial machinery, all in a single digital model. The ability to navigate the entire digital model is extremely important for quality assurance and the design review process. We can visualize complete 3D layouts of manufacturing plants and factories consisting of the products, tooling, fixtures, machines, and plant layouts.
The ability to walk through an extensive digital design is just the beginning of the Navisworks interactive experience. The Measuring tools enable detailed measurement of distance, area, and angles. User defined Cross Sections and section planes, enable close inspection of all details.

The construction process is a constant challenge for designers. The Factory design will change every day during the construction cycle. Navisworks allow Factory designers to display the construction process in the context of time, with the Timeliner. Designers can simulate the real-life experience and appearance of manufacturing plants and factory layouts at any time in the installation process, so things go according to schedule.

Objectives

After completing this chapter, you will be able to:

- Use the various Navigation tools available in Navisworks.
- Establish Viewpoints and Animations
- Use the Measuring tools to add dimensions to a Viewpoint.
- Create user defined Cross Sections.
- Create, locate, and utilize work features to perform modeling tasks.
- Review a Timeliner example.

Lesson: Navigation

This lesson describes how the Navisworks navigation tools work. It also introduces you to additional key actions and other tools to aid and enhance model navigation.

Objectives

After completing this lesson, you will be able to:

- Use the various navigation tools available in the Navisworks environment.

Using Navigation Tools

The Navigation bar and various tabs on the Ribbon include tools that help you navigate a model in a variety of ways. When using a navigation tool, additional navigation functions may be available by using the CTRL or SHIFT keys.

Navigation Bar

The Navigation bar is located on the right-hand side of the Scene view. You can control the display of the Navigation bar on the View tab, in the Navigation Aids panel, by selecting/deselecting the Navigation Bar option.

Icon	Name	Description
	Pan	Drag in any direction to move the camera correspondingly. Press SHIFT or CTRL to temporarily switch to Zoom.

	Zoom	Drag up or down to move the camera in and out along the axis of the focal point.
	Zoom Window	Click and drag a box over an area on the scene to zoom into the bounding area.
	Zoom Selected	Zoom in to selected items in the scene window.
	Zoom All	Fit the complete model into the scene window. **TIP:** This can be useful if lost, in or outside the model.
	Orbit	Orbit the camera around the focal point; drag in any direction to orbit correspondingly. Orbit mode resets the world up vector. Press SHIFT to temporarily change to Zoom and press CTRL to temporarily change to Pan.
	Free Orbit	Rotate the model around the focal point (similar to having the model in the palm of the hand). Drag in any direction to move the model correspondingly. Press and hold CTRL and select a new pivot location with the left mouse button. To temporarily change to Pan, press and hold the middle mouse button.
	Constrained Orbit	Spin the model on a turntable. Turntable mode resets the world up vector. Once started, the model continues to rotate; click again in the scene to stop rotation. Press SHIFT to temporarily switch to Zoom, or press CTRL to temporarily switch to Pan to adjust the camera height.
	Look Around	Turn the camera about the viewpoint (similar to moving your head around). Press CTRL to rotate the model.
	Look At	Looks at a particular face in the scene. The camera orients so that the selected face is centered and parallel with the screen.
	Focus	Focus an item to the center of the scene window. Select, then click on an item to center it.
	Fly	Fly the camera through the scene. Move up or down to ascend or descend and left or right to move correspondingly. If you find yourself flying too quickly, adjust linear and angular speeds by clicking Viewpoint menu > Edit Current Viewpoints. **TIP:** The Fly tool can be set to a speed that is suitable for the model size, and so on. Select a viewpoint to navigate from, then click Tools menu > Global Options > Interface > Viewpoint Defaults. Add a check mark to Override Linear Speed and then set the speed as required.
	Walk	Walk around and through the model scene. Walk mode resets the model to an upright position. Press SHIFT to increase walking speed or press CTRL to temporarily switch to Pan to adjust the camera height. Press SPACEBAR to temporarily crouch under an obstacle. **TIP:** The Walk tool can be set to a speed that is most suitable for the model size, and so on. Select a viewpoint to navigate from, then click Tools menu > Global Options > Interface > Viewpoint Defaults. Click Override Linear Speed, then set the speed as required.

The Viewpoint Tab

Additional viewing tools are available in Viewpoint tab on the ribbon, as described below.

Icon	Name	Description
	Perspective (camera panel)	View the model with a perspective camera (selected by default).
	Orthographic (camera panel)	View the model with an orthographic camera.
	Collision (Motion Settings panel> Realism)	Prevent navigation through objects. You can walk or climb over objects in the scene up to half the height of the collision volume (viewer). This way, you can climb stairs. **NOTE:** Collision detection is only available in Walk or Fly modes. **TIP:** The collision volume (viewer) can be adjusted in height and radius. Click Application Menu > Options > Interface > Viewpoint Defaults > Settings (Default Collision Detection), and set the viewer radius and height as required.
	Gravity (Motion Settings panel> Realism)	Enable gravitational effect when walking (for example, being pulled downwards). You can ascend and descend stairs and slopes. Enabling the gravity tool automatically enables collision. This ensures that gravity stops moving downward once the viewpoint collides with the ground.
	Crouch (Motion Settings panel> Realism)	Enable automatic crouching while walking. (This function only works with Collision Detection switched on.)
	Third Person (Motion Settings panel>Realism) **Tip**: The Third Person, Collision, Gravity, and Crouch commands are also available on the Walk/Fly pull-down menu on the Navigation bar.	View from a third person's perspective. When activated, an avatar (which is a representation of yourself) is visible in front of the camera within the 3D model. Navigating tools control the avatar's interaction with the current scene. **NOTE:** With Auto Zoom enabled, the camera temporarily zooms closer to the third person, if separated by an object during navigation. To disable, go to Tools > Global Options > Interface > Viewpoint Defaults > Settings > and remove the check mark from Auto Zoom. **TIP:** ▪ Collision Detection and Crouch, Gravity, and Third Person can all be switched on and off by pressing the shortcut keys, CTRL+C, CTRL+G, and CTRL+T, respectively. ▪ Using Third Person in connection with Collision Detection and Gravity makes this a very powerful function, giving an exact visualization of how a person would interact with the intended design. ▪ The Third Person settings can be adjusted. To change the settings for the current session, select the Viewpoint tab, and on the Save, Load & Playback panel, click (Edit Current Viewpoint) and click Settings in the Collision area. Under Third Person, select Enable, then select Avatar (type), and the Angle and Distance if required.

	Align X (Camera panel>Align Camera)	Aligns the camera along the X-axis.
	Align Y (Camera panel>Align Camera)	Aligns the camera along the Y-axis.
	Align Z (Camera panel>Align Camera)	Aligns the camera along the Z-axis.
	Straighten (Camera panel> Align Camera)	You can straighten the camera to align it with the viewpoint up vector. When the camera position is close to the viewpoint up vector (within 13 degrees), you can use this function to snap the camera to an axis. **Tip:** As an alternative, type 0 at the base of the Tilt window.
N/A	**Tilt Camera**	Use the scroll bar to tilt the camera up and down. To display the scroll bar in the Scene view, click Show Tilt Bar on the Viewpoint tab.

Navisworks global settings for the default use of the Realism commands are set in the Application Menu > Options > Viewpoint Default > Settings. When the user assigns settings from this location they become the default for every model that is opened from this point on. To set and store the use of the Realism commands at the model level, click Edit Current Viewpoint on the Viewpoint tab and click Settings.

Exercise: Using the Navigation Tools

In this exercise, you explore the Factory Layout using various navigation commands available on the Navigation Bar.

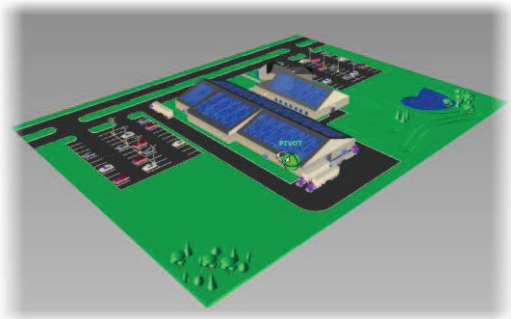

The Completed Exercise

1. Open **NAV_003_Navigation.nwf**
   - Click in the background to deselect.

2. Use the Zoom Commands.
   - On the Navigation bar, select the associated with the zoom command.
   - Click **Zoom All** to obtain an overall view of the model.

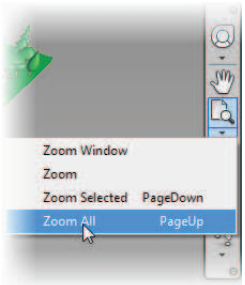

Note: The button on the Navigation bar changes to Zoom All and stays active until another tool is selected.

3. Use Zoom Window.
   - Activate the Zoom Window tool.

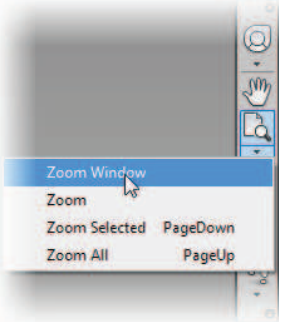

   - In the Scene View, draw a box around the area of the model shown below.

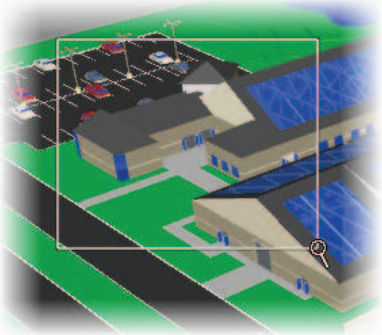

4. Walk Thru the Model.
   - On the Navigation Bar, click the **Walk** Tool.

   - On the Viewpoint ribbon, set the realism settings as shown in the following image, then set the Lighting option to use Scene Lights.

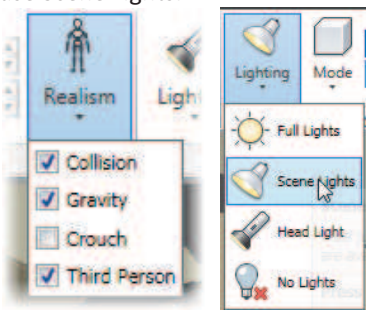

   - Left Click and drag the mouse fwd to walk in that direction. After you land on the ground proceed into the main factory building entrance.

5. Explore the factory building using the walk tool.
   - Drag the mouse Left and Right to look side to side.
   - Use the scroll wheel to look up and down.
   - Use the Walk Tool to explore the factory buildings.
     Note: The collision setting in the realism panel allows you to walk up stairs.

6. Explore the Factory grounds using the Fly tool
   - Exit the building and stand in front of the factory building.
   - Clear all options on the Realism tool as shown in the following image.

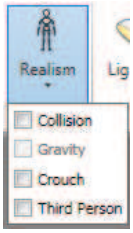

   - In the Navigation bar select the associated with the Walk command and click the **Fly** fool.

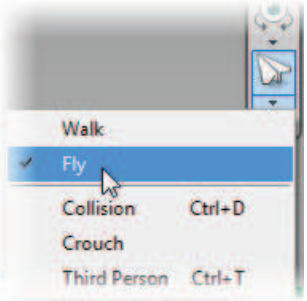

   - Hold the Left button down to start flying thru the grounds.
   - Move the mouse fwd and back to change elevation.
   - Move the mouse right and left to bank in that direction.
   - Explore the factory grounds using the fly command
     Note: Hold the scroll wheel down to adjust the yaw while flying.

7. Use the View Cube.
   - Click the Home button on the View Cube.

   - Click the Front Face of the View Cube.

   - On the Navigation Bar, click Zoom All.
   - Use the View Cube to set the view to Right, Left, and Top.
   - Return to the Home View.

8. Use the Orbit Command.
   - On the Navigation Bar, click the **Orbit** command.

   - Place the cursor at the desired Pivot point and scroll up and back. This sets the pivot point for the orbit command.

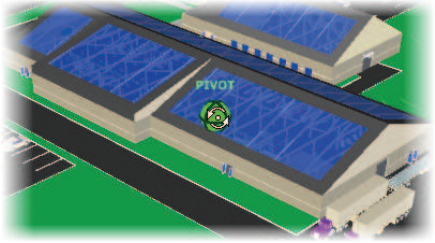

   - Left click and drag to adjust the orientation of the model.
   - Using the View Cube, return to the Home View
   - On the Navigation Bar, select the associated with the Orbit command.
   - Click the **Constrained Orbit** tool.
   - Drag left and right to spin the model like a turntable.
     Note: Release the mouse button while dragging for a continuous spin.

   - Start a New file without saving.
   - End of Exercise.

Lesson: Viewpoints

This lesson describes how to create, organize, edit, and export viewpoints. It also introduces you to setting navigation commands in viewpoints.

Objectives

After completing this lesson, you will be able to:

- Create, organize, edit, and export viewpoints.

About Viewpoints

Viewpoints are snapshots taken of the model as it is displayed in the scene. The model can be navigated to a required view, items of the model can be hidden, and other items can be rendered with different materials and lighting. Then the finished scene can be saved as a viewpoint for further reference.

In addition, you can add a variety of comments and Redline tags to a saved viewpoint.

When a viewpoint is saved it contains information about the following:

- Camera position and focus point
- Section planes
- Navigation modes
- Speeds
- Rendering conditions
- Perspective/orthogonal modes

Procedure: to Display and Add a Viewpoint

1.	To display the Saved Viewpoints window, if it is not visible, select the Viewpoint tab and click the icon on the Save, Load & Playback panel's title bar. As an alternative, select the View tab, expand the Windows option, and enable Saved Viewpoints. The Saved Viewpoints window displays a list of the previously saved viewpoints. 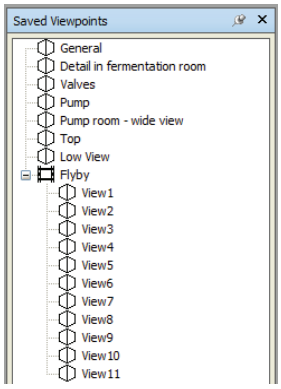
2.	Click a viewpoint to display it.
3.	To quickly view the whole model, click Zoom All on the Navigation Bar on the right-hand side of the Scene View. **NOTE:** Saved animations are also located in the Viewpoints window. See "Animate Objects" for more information.
4.	Navigate to the required position in the model.
5.	Prepare the view (for example, apply rendering, lighting, comments, redlines, navigation modes, and tools).
6.	Right-click in the Viewpoints window, and click Save Viewpoint.
7.	Enter a new name and press ENTER. **Tip:** To rename a Viewpoint to an alternate name, right-click the viewpoint in the Viewpoints window and click Rename.

Organizing Viewpoints

Viewpoints (and animations) can be moved, reordered, or organized in folders as follows:

- To move a viewpoint to a different position, drag it to the new position.
- To sort the list of viewpoints alphanumerically, right-click in the Viewpoints window, and then click Sort.
- To create a folder, right-click in the Viewpoints window, then click New Folder.
- To rename the folder, right-click the folder in the Viewpoints window, and click Rename. In the folder name field, enter a new name for the folder.
- To move viewpoints to a folder, in the Viewpoints window, select all viewpoints to be moved and drag to the folder.
- To sort the list of folders (and viewpoints) alphanumerically, right-click in the Viewpoints window, and then click Sort.

Editing Viewpoints

Viewpoint settings can be changed in Application Menu > Options > Interface > Viewpoint Defaults, which will be effective on all new viewpoints. Each viewpoint can also be edited individually.

Procedure: To Open the Viewpoint Editor

1.	In the Viewpoints window, select the viewpoint to be edited.
2.	Right-click the selected viewpoint, and then click Edit. **IMPORTANT:** To save the changes after editing, click OK. Then right-click the viewpoint in the Viewpoint window, and click Update. 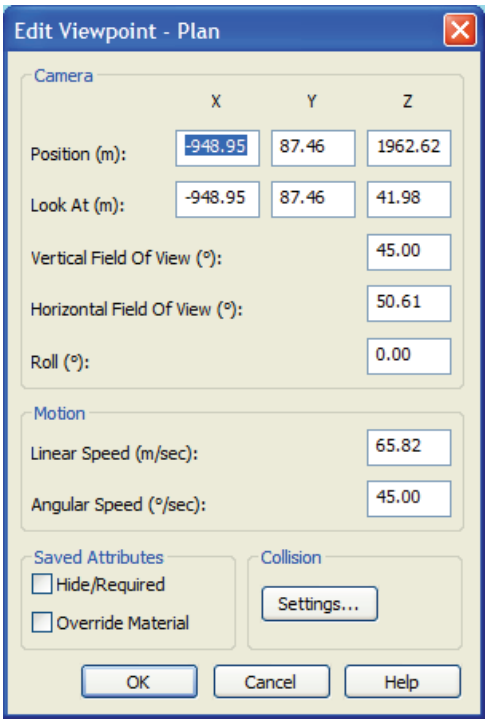

Camera Positions

- **Position** – X Y Z coordinates of the viewing position.
- **Look At** – X Y Z coordinates of the focal point.
- **Vertical Field of View** – Viewing perspective of the camera.
  - Enter a value between 1 and 90. (This is not editable when in orthographic mode.)
- **Horizontal Field of View** – Viewing perspective of the camera.
  - Enter a value between 1 and 90. (This is not editable when in orthographic mode.)
- **Roll** – Roll of the camera about its viewing axis. (This value is not editable when the world up vector remains upright (in Walk, Orbit, and Turntable modes.)

Motion Speeds

Editing the following motion settings takes effect when navigating from this viewpoint. When a different viewpoint is selected, the motion settings revert to the Global Option settings unless overridden in that viewpoint.

- **Linear Speed** – Navigation speed in a straight line.
- **Angular Speed** – Turning speed of a viewpoint (value in degrees per second).

Saved Attributes

- **Hide/Required** – Saves objects set in the scene as hidden or required.
- Override Material – Saves overridden colors and transparencies of an object in a viewpoint.

Collision

- Click Settings in the Edit Viewpoint dialog box to open the Collision dialog box.

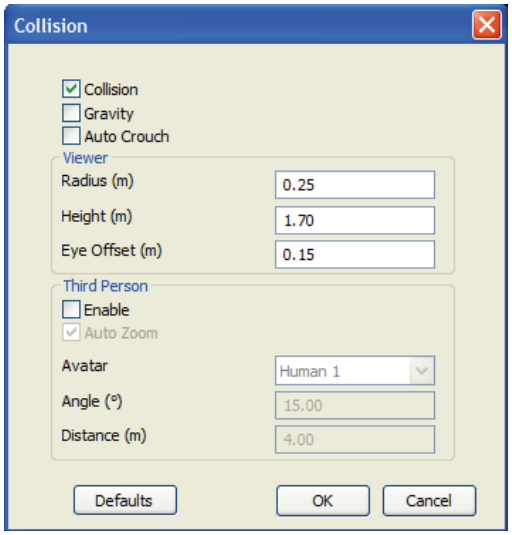

- **Collision** – Add a check mark to switch collision detection on with this viewpoint.
- **Gravity** – Add a check mark to incorporate gravity on with this viewpoint.
- **Auto Crouch** – Add a check mark to enable crouching in this viewpoint.

Lesson: Animations

This lesson describes how to record animations and create animations between two or viewpoints.

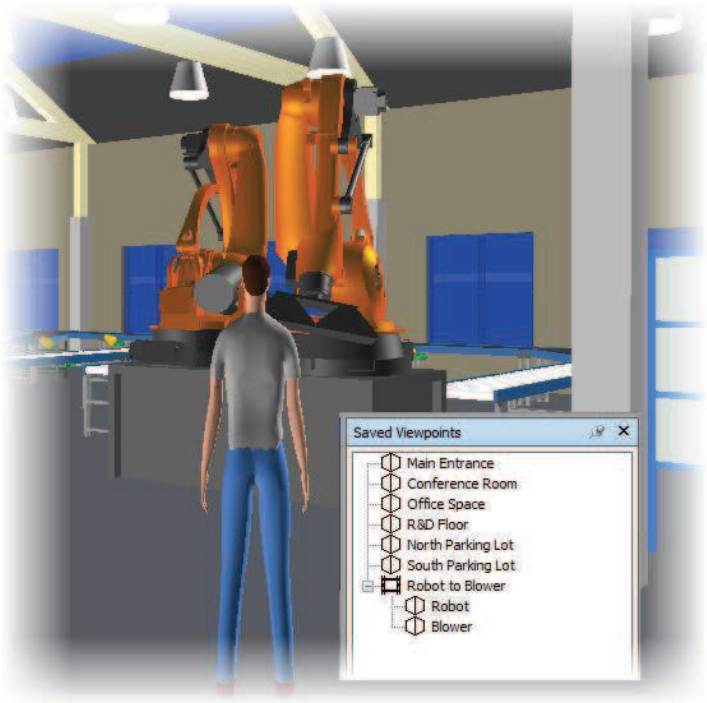

Objectives

After completing this lesson, you will be able to:

- Record a Walking or Flying Animation
- Create an Animation between two Viewpoints.

Creating Animations.

Animations can be created, edited, and played back in Navisworks, and also played back in the Freedom viewer. Animations can also be exported in AVI format to be played back in a variety of software including Windows Media Player.

There are two ways to produce an animation, either by recording interactive navigation, or by animated transitions between saved viewpoints. In addition, an animation can be created in the form of a slide show.

Animation Tab

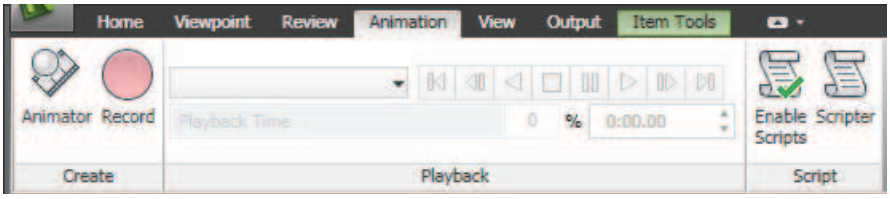

Procedure: To View a Saved Animation

1.	In the Saved Viewpoints window, select the animation.
2.	Select the Animation tab.
3.	On the Playback panel, click Play to view the animation.
4.	Click Stop or Pause to stop play at any time.
5.	Click Step Forward or Step Backward to advance or reverse by one frame in the animation.
6.	Click Rewind or Forward to move to the beginning or end of the animation.
7.	Drag the Animation Slider Playback Time 30 % or the Time field 0:05.00 to view a specific point in the animation. **NOTE:** Animations can also be played back using the controls on the Viewpoint tab. The only difference is that the Animation Slider and the Time field are not available on this tab.

Procedure: To Record an Interactive Animation

1.	Select the viewpoint where the animation will begin.
2.	Select the Animation tab.
3.	On the Create panel, click Record to start recording movements in the Navisworks scene.
4.	Navigate around the model as required.
5.	In the Recording panel, click Stop to end the recording. Navisworks automatically saves the animation to the Viewpoints window and names it Animation1.
6.	In the Viewpoints window, right-click Animation 1, and click Rename. In the animation name field, enter a new descriptive name, and press ENTER. **NOTE:** Any delay in navigation or delay due to switching navigation tools will cause a cut frame to be added to the animation. This cut frame will add a controlled pause to the animation, or be an identifier of where frames may need to be removed to make a more smooth video movement.

Procedure: To Create an Animation from Viewpoint Transitions

1.	Select the Animation tab.
2.	Right-click in the Viewpoints window, and then click Add Animation.
3.	To rename the new animation, in the Viewpoints window, right-click the animation, and click Rename. In the animation name field, enter a new name and press ENTER.
4.	Create all the viewpoints required for the animation and rename each if required.
5.	Drag the viewpoints into the empty animation. The animation is ready for viewing.

Exercise: Create Viewports and Animations

In this exercise, you create Viewpoints at specific points in the factory layout. These viewpoints are then used to create animations moving from one viewpoint to another.

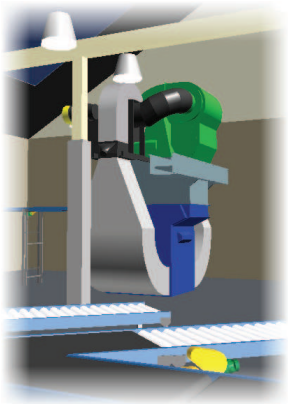

The Completed Exercise

1. Open **NAV_004_Viewpoints.nwf**
   - Click in the Background to deselect.

2. Review existing Viewpoints.
   - On the View tab, under Window, Activate the Saved Viewpoints window.

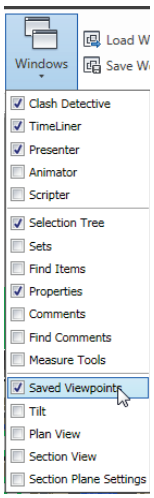

   - Pin the Window open by clicking the pin button shown below.

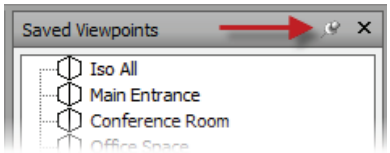

3. Review the Existing Viewpoints.
   - Some Viewpoints have already been created for this exercise.
   - In the Saved Viewpoints window, click the **Main Entrance** viewpoint.

   - Notice that the viewpoint can be set to behave a predetermined manner. In this case the 3rd Person Avatar is active and the navigation mode is set to walk.
   - In the Saved Viewpoints window, click the Conference Room Viewpoint.
   - Review the other existing Viewpoints.

4. Create a Viewpoint.
   - In the Saved Viewpoints window, click the **R&D Floor** viewpoint.
   - On the Viewpoint ribbon, clear the Third Person option for Realism.

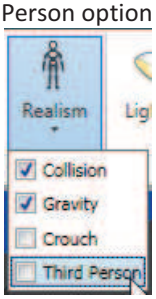

   - Position yourself in front of the Robot Arm as shown in the following image.

- Right Click in the Saved Viewpoint window and select **Save Viewpoint**.

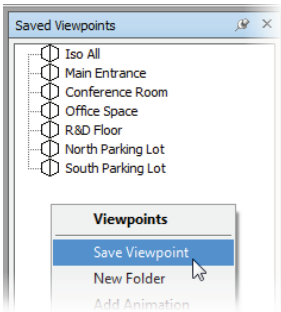

- Name the new Viewpoint, **Robot Arm**.
- Change your position to view the Blower as shown in the following image.

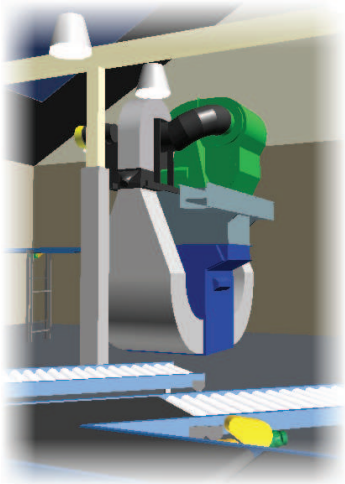

- Right Click in the Saved Viewpoint window and select Save Viewpoint. Name the new Viewpoint, **Blower**.

8. Create an Animation between two Viewpoints.
   - Right Click in the Saved Viewpoint window and select Add Animation.

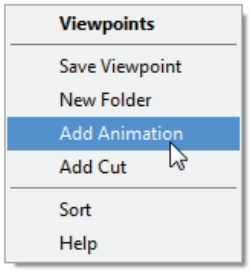

   - Name the Animation **Robot to Blower.**

- Left Click and Drag the Robot Arm Viewpoint on top of the animation node and release the mouse button.

- Repeat the previous process dragging the Blower Viewpoint into the animation.
- After adding the Viewpoints to the animation the animation node should look like the following image.

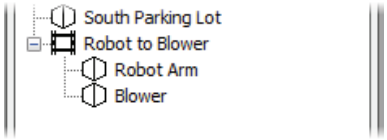

6. Set the Timing for the Animation.
   - Right Click on the Animation and select **Edit**.
   - In the Edit Animation dialog, set the duration to **30** seconds.

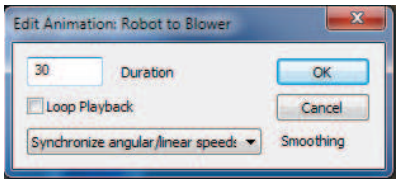

   - Click **OK**.

7. Viewing the Animation.
   - On the Viewpoint ribbon, on the Save, Load & Playback panel, click the play button.

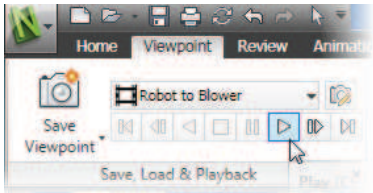

   Note: The Animation must be selected in the Saved Viewpoint window.

   - Start and New file without saving.
   - End of Exercise.

Exercise: Record an Animation.

In this exercise, you create an animation by recording a walkthrough.

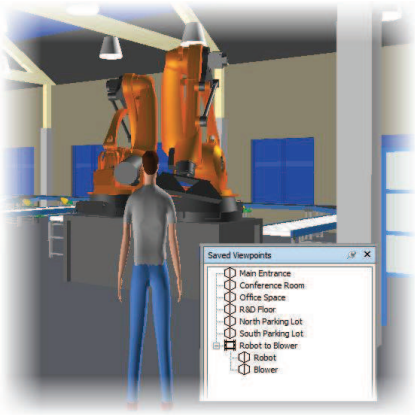

The Completed Exercise

1. Open **NAV_005_Record_Walkthru**.
   - Click in the Background to deselect.
   - Activate the **R&D Floor** Viewpoint.

2. Record a Walkthru.
   - Click the Animation Tab.
   - **Note**: *Please read the following step entirely before proceeding*.
   - Click the **Record** button and quickly begin walking. Walk out the rear of the factory building and into the factory out building next door. When you reach your destination, click the Record button to stop the recording.

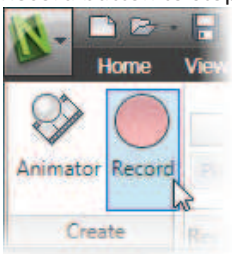

   - In the Saved Viewpoint window, name the new animation **Walkthru**.

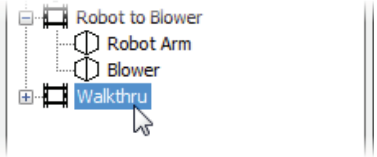

3. Set the timing for the Animation.
   - Right Click on the Walkthru animation and select **Edit**.
   - In the Edit Animation dialog, set the duration to **30** seconds.

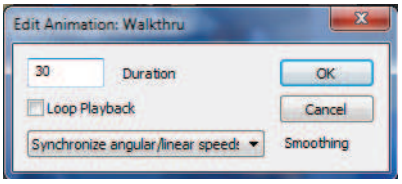

   - Click **OK**.

4. View the Animation.
   - On the Animation ribbon, Playback panel, click the **Play** button.

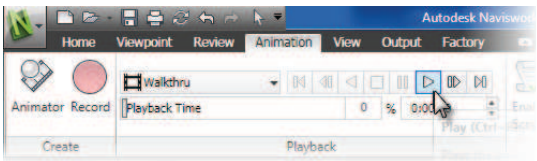

Challenge: Create a Recorded Animation of a flight around the factory grounds.

Hints:

- Turn off the Third Person Avatar.
- Turn off Collision.
- Select a starting position outside the buildings.

Lesson: Digital Mockup

Combining a digital prototype of a factory building with another digital prototype of a packaging or machining line can create several challenges. Navisworks allows designers to easily compare multiple digital prototypes in a digital mockup of the entire design. Experiencing the factory building, factory lines, and supporting infrastructure before construction allows design refinement and the opportunity to fix critical errors. This section will focus on Navisworks tools that aid in the analysis and manipulation of the Digital Mockup.

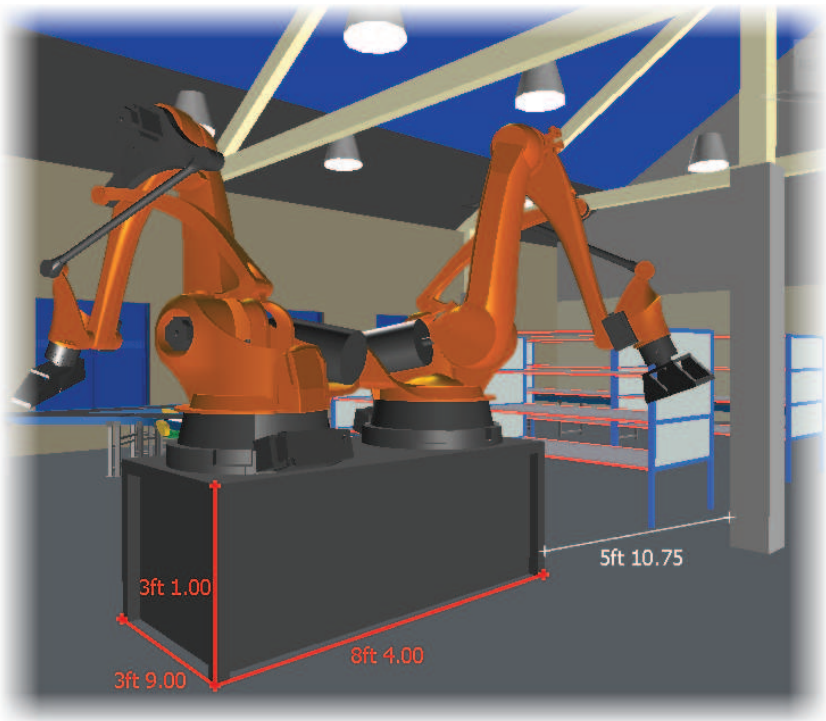

Objectives

After completing this lesson, you will be able to:

- Utilize the Factory Layout and Item Tools to manipulate model geometry.
- Use the Measuring Tools to make linear, angular, and area measurements.
- Use the Cross Section tools to expose interior detail.
- Review a Timeliner sample file.

Lesson: Factory Layout Tools

The version of Navisworks that ships with the Autodesk Factory Suite has special tools built in to aid in the Factory Layout process. The floor concept, introduced in the Inventor Factory Design Utilities, is present in Navisworks as well. Users can insert geometry from various CAD sources and specify a landing surface, so components land upright. Special Grip Snap options make placing model geometry extremely easy. This lesson will focus on the Factory Layout Tools available in Autodesk Navisworks.

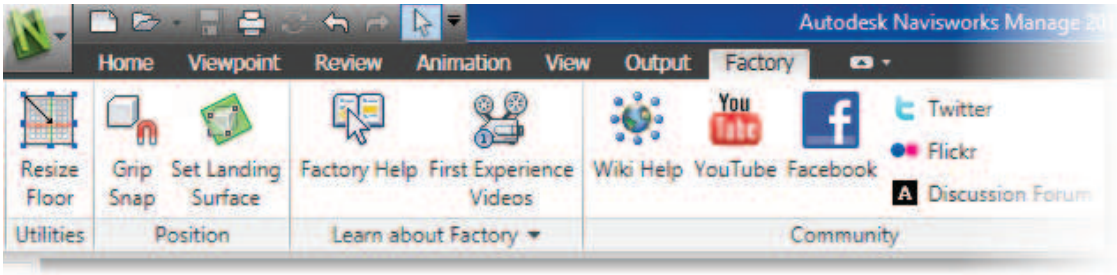

Objectives

After completing this lesson, you will be able to:

- Familiarize yourself with the Factory Layout Tools available in Navisworks.
- Append Model geometry from various CAD sources into the Navisworks model.
- Use the Item Tools to move and rotate model geometry.

Factory Layout Ribbon

The Factory ribbon contains the Factory Layout Tools unique to the Factory version of Navisworks. An outline of the commands and general functionality are included in the table below.

1. Utilities		You can use Resize Floor to manually change the floor size by dragging the borders. When you click Resize Floor, grips display at the corners and midpoints of the floor edges. 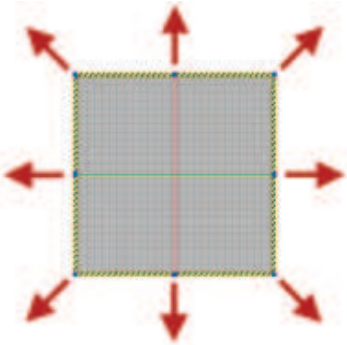 The new floor size is saved in the Options Editor dialog box. If Auto Resize is enabled, Resize Floor updates the minimum floor size.

2. Position	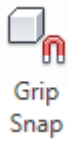	The Grip Snap tool provides several methods for moving and rotating models. When you select a point or an edge on a model, a mini-toolbar displays with options for moving the model. 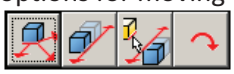 Grip Snap options for an edge selection  Grip Snap options for a point selection Each mini-toolbar provides three options for moving the model. Once you select an edge or a vertex on the model, the mini-toolbar appears. You can press Tab to cycle through each of the mini-toolbar options. Click the Back option on the far right of the mini-toolbar to cancel the edge or vertex you selected, and then you can select a different edge or vertex on the model again. Once you start to move the model, you can press Esc to cancel the move, and then press Esc a second time to cancel the command. • Free Drag is available for both Edge and Point selections. The model is attached to the pointer, and you can manually move the model to a different location. The model snaps to the floor grid and other model geometry. • Move Using Reference Geometry is available for both Edge and Point selections. It repositions the model based on selections on another model. The orientation of the model does not change. • Drag Along Ray is only available for Edge selections. You can dynamically drag the model along the infinite line defined by the selected edge. Or, you can enter a specific value in the Heads-Up Display. 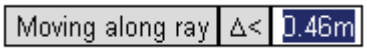 • Rotate About Point is only available for Point selections. You can dynamically rotate the model around the selected point. The rotation is restricted to the XY plane. You can also enter a specific angular value in the Heads-Up Display.  • The Back button cancels the current selection and keeps the Grip Snap command active so you can select other geometry. You can move one or several models with the Grip Snap command. The model with the selected geometry always moves. To move multiple models, press and hold the CTRL key while selecting them in the graphics window before you start the command. Or, you can select the models from the Selection Tree after starting the command. If you start the command without preselecting models, you can only move the model with the selected geometry. If multiple models are preselected, and you select geometry on a different model, the preselection set is cleared and only the last model moves.

2. Position		Most components in a factory are placed relative to the floor. Conveyors and other equipment sit on the floor, but items like hoppers and ductwork are usually positioned at a specific height above the floor. The landing surface of a model defines how it sits on the factory floor. Models are initially placed so the model coordinate system aligns with the factory coordinate system. You can set the landing surface by selecting three points on the model to define a plane. You can also change the landing surface of a model if it requires a different orientation. For example, a strut channel can be mounted on the ceiling or on a wall, so the landing surface depends on the location. For machinery, you simply pick points on the mounting feet and it will sit on the floor. For objects like pipe hangers, you pick the points where you want to set the height. The model is placed on the floor, and you can use Grip Snap to move it to the correct height. 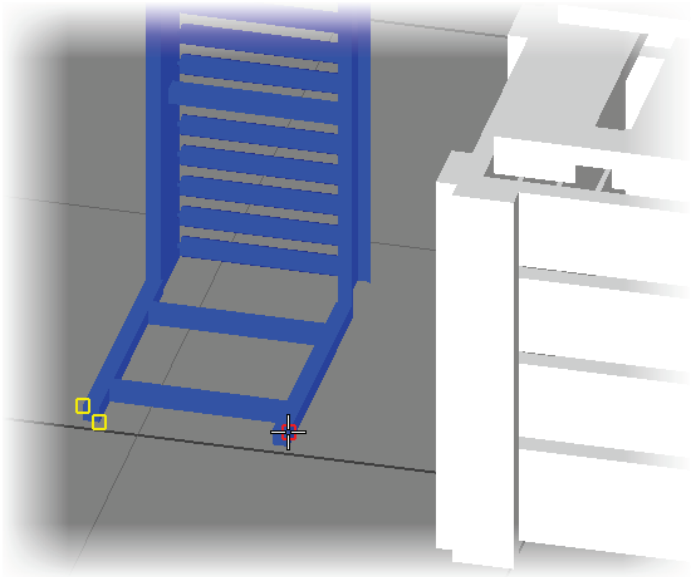
3. Learn About Factory		Activates the Factory Specific Help system. 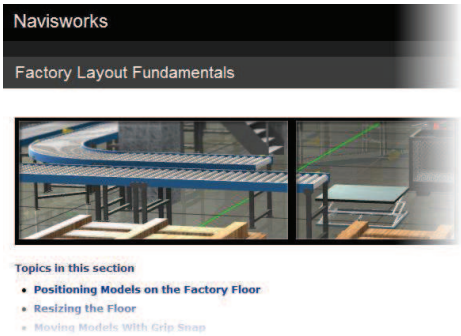
		Activates a web link to the Autodesk Manufacturing Channel on YouTube. There you will find various instructional videos to help you get started using the application.

4. Community	Wiki Help	Activates the Autodesk Wiki Help page.
	YouTube	Activates the Autodesk Factory Design YouTube Channel.
	Facebook	Activates the Autodesk Factory Design Facebook page.
	Twitter Flickr Discussion Forum	Activates the Autodesk Twitter, Flicker, and Autodesk Discussion Forum pages.

Lesson: Item Tools

When you select model geometry, the context sensitive Item Tools tab appears on the ribbon. This ribbon, allows you to manipulate the selected geometry in a number of ways. This lesson outlines the commands located on the Item Tools ribbon.

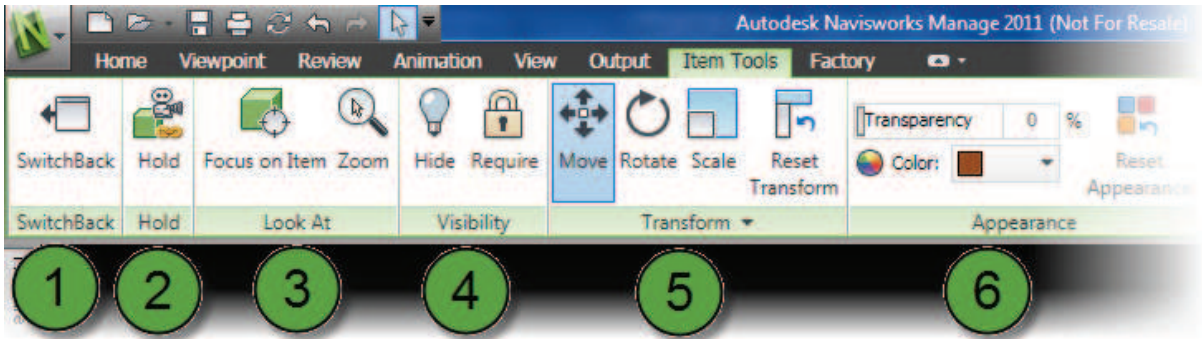

1. Switchback	SwitchBack	You can use the SwitchBack functionality to send the current view of the currently loaded file back to Inventor. **Note**: SwitchBack supports all versions of Inventor 2011, but Inventor must be installed on the same machine as Navisworks Factory for SwitchBack to work. Additional Switch Back information is available in this chapter.
2. Hold	Hold	When you navigate around a model in Autodesk Navisworks, it is possible to "pick up" or hold selected items and move around with them in the model. For example you may be viewing a plan for a factory and would like to see different configurations of machine layouts.

3. Look At		When you are in focus mode, clicking on an item swivels the camera so that the point clicked is in the center of the view. This point becomes the focal point for the Orbit tools (SteeringWheels and navigation bar).
	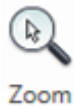	Zooms to the extents of the selected item.
4. Visibility		Hides the selected items. You can hide the objects in the current selection so that they are not drawn in the Scene View. This is useful when you want to remove specific parts of the model. For example, when you walk down the corridor of building, you may want to hide a wall that occludes your view of the next room.
		Forces the selected items to remain visible during interactive navigation, regardless of any performance settings. Although Autodesk Navisworks intelligently prioritizes objects for culling in the scene, sometimes it drops out geometry that needs to remain visible while navigating.
5. Transform		Moves the selected item with the translation Gizmo. **Note**: Additional information on the Move command is available in this chapter.
		Rotates the selected item with the translation Gizmo. **Note**: Additional information on the Rotate command is available in this chapter.
		Resizes the selected item with the translation Gizmo. **Note**: Additional information on the Scale command is available in this chapter.
		Resets the position, rotation, and scale of the selected objects back to the original values.
6. Appearance	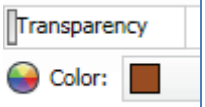	Sets the Transparency level and Color of the Selected objects.

The SwitchBack Feature

SwitchBack is designed to improve the workflow of design review by significantly reducing the time taken finding and altering original designs.

When reviewing a model, the SwitchBack feature enables an instant switch back from Navisworks, to the CAD application that the model was created in. Furthermore, when an object is selected in Navisworks and then SwitchBack is selected, the same object is displayed in the CAD application, in the same camera position.

This means that when reviewing an object in the model that then requires changes, by using SwitchBack, you can access the object easily in the CAD application and make changes. When the file is saved in the CAD application, and the model in Navisworks refreshed, the effect of the altered object can be reviewed

To use SwitchBack with Inventor.
1. Start Inventor so that both it and Navisworks Factory are running simultaneously.
2. Select an object in the Scene View, and click Item Tools tab  SwitchBack panel SwitchBack.
3. The current Navisworks Factory camera view is taken back to Inventor, and the same object is selected. **Note**: Alternatively, you can right-click over the object in the Scene View and select SwitchBack from the pop-up context menu. You can also right-click over the object node in the Selection Tree and select SwitchBack. Additionally, in the Clash Detective window, on the Results tab, you can click the SwitchBack button.
4. Make the changes in Inventor, then save the changes.
5. Return to Navisworks Factory, and click Refresh on the Quick Access toolbar to view the modified object.

Move an Object with the Gizmo

To move an object with gizmo
1. Select the object you want to move in the Scene View.
2. Click Item Tools tab ➤ Transform panel ➤ Move .
3. Use the move gizmo to adjust the position of the currently selected object: ○ To move all currently selected objects, place the mouse over the square at the end of the desired axis. When the cursor changes to , drag the square on the screen to increase/decrease the translation along that axis. ○ To move the objects along several axes at the same time, drag the square frame between the desired axes. Dragging the yellow square in the middle of the move gizmo enables you to snap this center point to other geometry in the model. ○ To move the gizmo itself rather than the selected objects, hold down the CTRL key while dragging the square at the end of the desired axis. ○ To snap the move gizmo to other objects, hold down the CTRL key while dragging the yellow square in the middle of the gizmo. ○ For the point-to-point translation, hold down the CTRL key, and use the center square to drag the gizmo to the start point. Then, with CTRL released, drag the square again to move the objects to the end point.

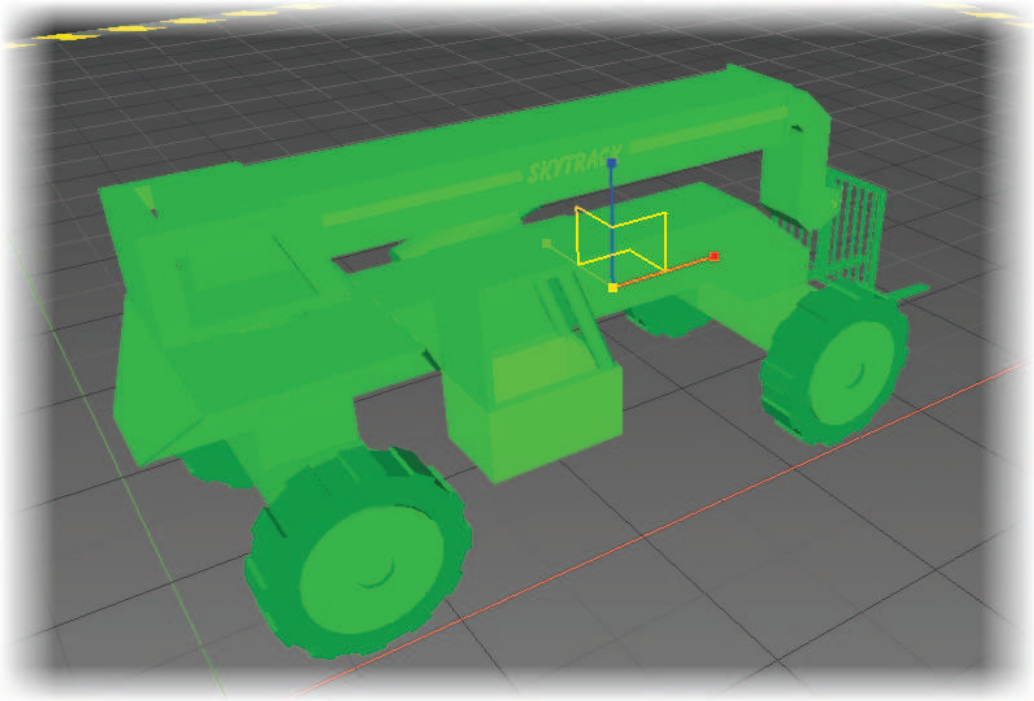

Rotate an Object with the Gizmo

To rotate an object with gizmo
1. Select the object you want to rotate in the Scene View.
2. Click Item Tools tab ➤ Transform panel ➤ Rotate .
3. Use the gizmo to rotate the currently selected object: ○ Before you can rotate the currently selected objects, you need to position the origin (center point) of the rotation. To do this, place the mouse over the square at the end of the desired axis. When the cursor changes to , drag the square on the screen to increase/decrease the translation along that axis. This will move the gizmo itself. Dragging the yellow square in the middle of the rotate gizmo enables you to move it around, and snap it to points on other geometry objects. ○ Once the rotate gizmo is positioned correctly, place the mouse over one of the curves in the middle, and drag it on the screen to rotate the selected objects. The curves are color-coded, and match the color of the axis used to rotate the object around. So, for example, dragging the blue curve between the X and Y axes, rotates the objects around the blue Z axis. ○ To rotate the orientation of the gizmo to an arbitrary position, hold down the CTRL key while dragging one of the three curves in the middle. ○ To snap the gizmo to other objects, hold the CTRL key while dragging the yellow square in the middle of the gizmo.

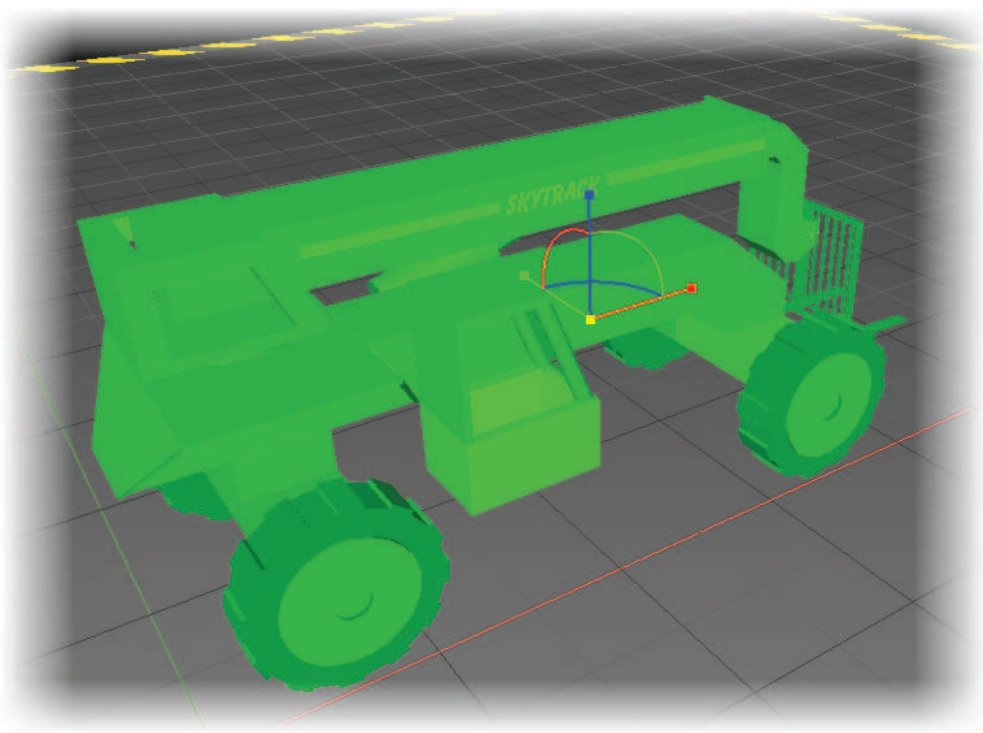

Resize an Object with the Gizmo

To resize an object with the gizmo
1. Select the object you want to resize in the Scene View.
2. Click Item Tools tab ➤ Transform panel ➤ Scale .
3. Use the scale gizmo to resize the currently selected object: ○ To resize all currently selected objects, place the mouse over one of seven squares. When the cursor changes to , drag the square on the screen to modify the size of the objects. Typically, dragging a square up or right increases the size, dragging it down or left decreases the size. ○ To resize the objects across a single axis only, use colored squares at the end of the axes. To resize the objects across two axes at the same time, use yellow squares in the middle of the axes. Finally, to resize the objects across all three axes at the same time, use the square in the center of the gizmo. ○ You can modify the center of scaling. To do this, place the mouse over the square in the middle of the gizmo, and hold down the CTRL key while dragging the square on the screen.

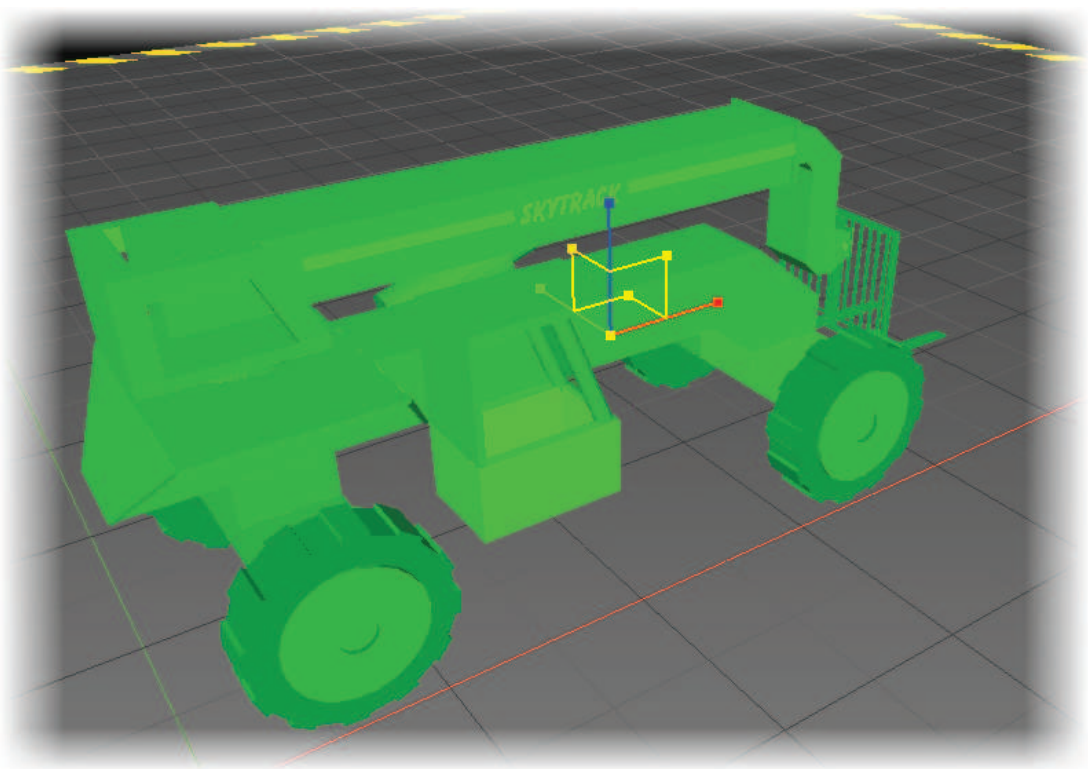

Exercise: Factory Layout Tools and Item Tools

In this exercise, you add a Skylift and shipping container to the overall factory design. The Factory Tools are used to set the landing surface for one of the components, and the Item Tools are used to place the objects in the desired location.

The Completed Exercise

1. Open **NAV_005A_Factory_Item_Tools.nwf**.
   - Click in the background to deselect.
   - Activate the Factory Layout Tools Viewpoint.

2. Add a shipping container to the layout.
   - On the Home ribbon, use the **Append** command and add *Container.skp* from the Components / Google Sketchup folder.
   - Navisworks automatically zooms to and highlights the appended file, as shown in the following view.

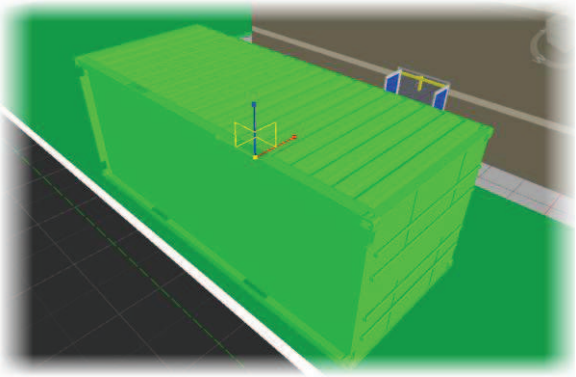

3. Set the Landing Surface for the Container
   - The Container was originally modeled in a different X,Y,Z orientation. The Set Landing Surface command located on the Factory ribbon, allows users to specify a landing surface by selecting 3 points.
   - On the Factory ribbon, click the **Set Landing Surface** tool.
   - Click the 3 corner points shown in the following image.
     Note: Each point is located on the bottom (currently side) of the shipping container.

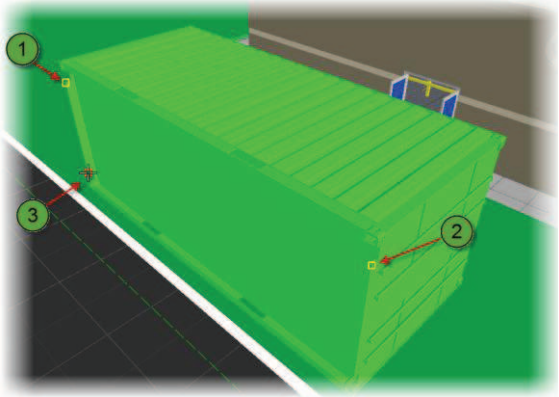

   - The Container flips to the underside of the floor grid. Click the **Inverse** button in the heads up display as shown.

   - The Container flips to the proper orientation. Click the **Confirm** button in the heads up display as shown.

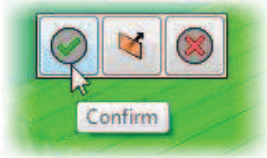

   - Press the **Esc** key to deselect the component.

4. Place the Container on the Flatbed Truck at the rear of the factory using Grip Snaps.
   - On the Factory ribbon, click the **Grip Snap** tool.

   - Select the lower corner of the Shipping Container as shown in the following image.

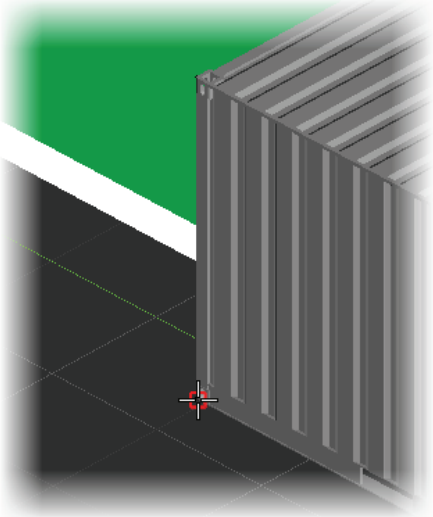

   - Select **Free Drag** from the Heads Up Display as shown.

   - Activate the **Loading Area** Viewpoint.
   - Click the horizontal edge of the flatbed as shown in the following image.

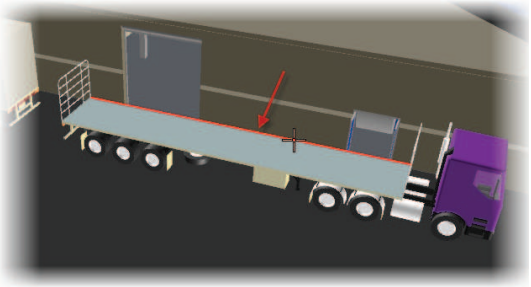

   - The Shipping Container should be positioned similar the following image.

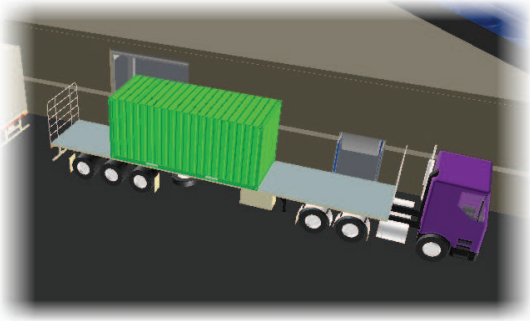

5. Use the Item Tools to place the Shipping Container in the final position.
   - When any object is selected, the Item Tools tab appears at the top of the ribbon (Shown Below).

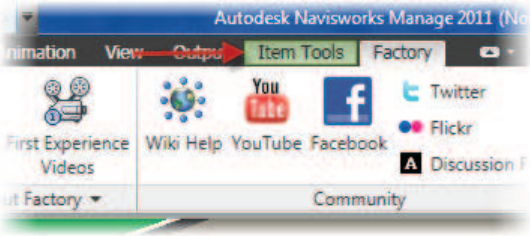

   - On the Item Tools ribbon. Click the **Move** tool.

   - The Move Gizmo appears at the center of the selected geometry.

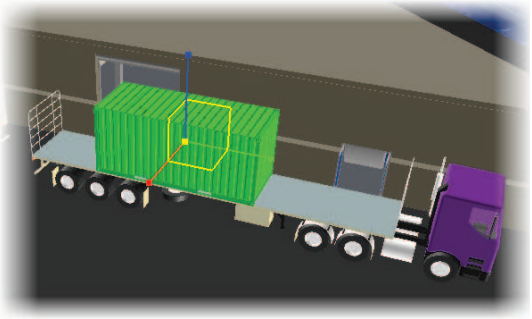

- Place the cursor at the end of the Green (Y) axis. When the Hand symbol appears, Left Click and drag the Shipping Container to the front of the flatbed.

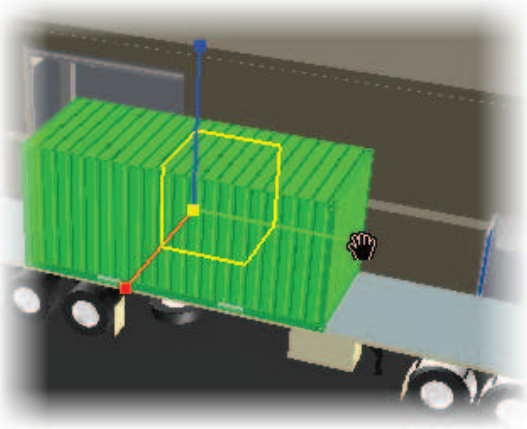

- The final position of the Shipping Container is shown below.

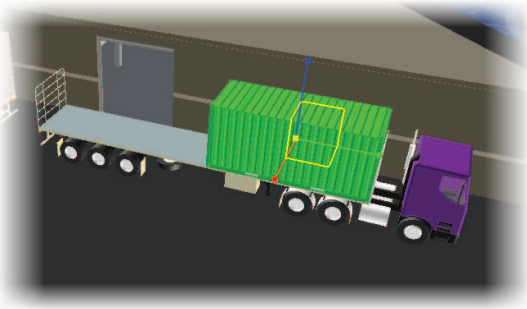

- Press **ESC** to Clear the selection.

6. Activate the Factory Layout Tools Viewpoint for the Challenge portion of this exercise.

Challenge – Using the processes demonstrated in this exercise, do the following.

- Append **Skylift.skp** to the layout. The file is located in the Components / Google Sketchup folder.
- Use the Item Tools to Move the Skylift to the rear of the facility.
- Hint: The Top Viewpoint is preset looking down on the overall factory grounds. Using this viewpoint allows you to drag the Skylift and easily cover the distance.
- Use the Rotate Gizmo to spin the Skylift into position.
- The following image shows the desired position of the Skylift.

Lesson: Measuring Tools

Navisworks provides designers with a set of measuring tools. Measurements can be made from any edge, vertex, or surface. The Measurement tools are located on the Review ribbon.

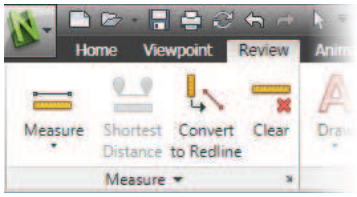

Snapping

Snapping controls can be set in the Options Editor to precisely select vertices and edges while making measurements. These settings are in the Snapping group of the Options Editor dialog box. You can also specify the Tolerance for picking in this window.

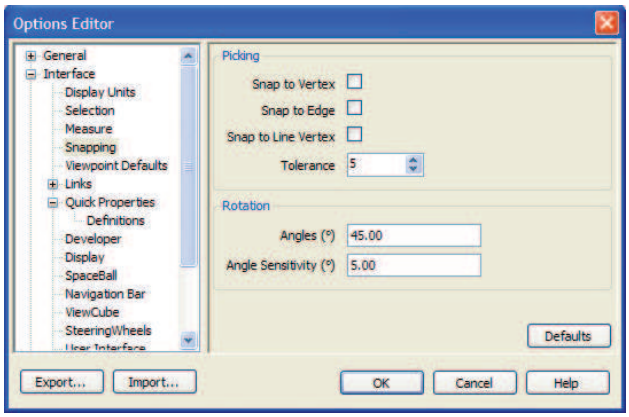

Enable Snap to Vertex, Snap to Edge, or Snap to Line Vertex, as necessary, to aid in making measurements. Snap settings can also help when moving, rotating, or scaling in Navisworks.

Cursor	Name	Description
	No Snap	All Snap options are cleared. No snap function, but a point on a surface is found.
	Vertex	Cursor changes to when a point, snap point, or line end is moved over (found to snap to).
	Edge	Cursor changes to when moved over an edge (found to snap to).

The geometry in Navisworks is constructed with triangles, and therefore the cursor will snap to edges that may appear to be in the middle of a face.

Viewing the model in Hidden Line mode clarifies which vertex or edge the cursor is snapping to

.

Procedure: How to Use Measuring Tools

1.	Select the Review tab and expand the Measure command. 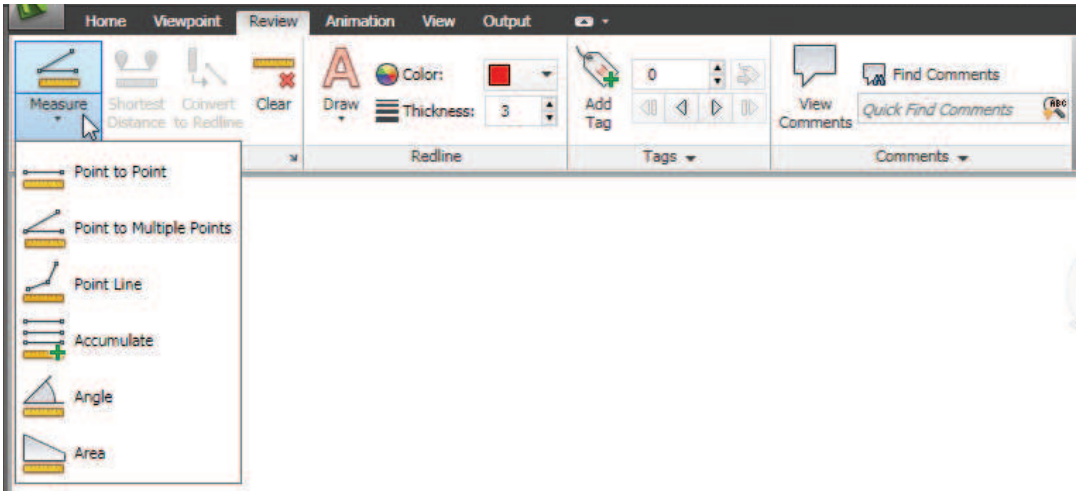 In the expanded Measure command there are six measuring tools that are available for use.
2.	Point to Point measures between two points. ▪ Click Point to Point. Then click the start and end points of the distance to be measured. A line is displayed between the two points and the value is displayed on the model. ▪ Click Clear or right-click to remove existing points and select a new base point.
3.	Point to Multiple Points measures between a base and various other points. ▪ Click Point to Multiple Points. Then click on the start and first end point to be measured. A line is displayed between the two points and the value is displayed on the model. ▪ Click the next end point to be measured. A line is displayed between the base point and the next end point and the value is displayed on the model. ▪ Repeat to measure additional end points if required. ▪ Click Clear or right-click to remove existing points and select a new base point.
4.	Point Line measures a total distance between multiple points along a route. ▪ Click Point Line. Then click the start and the second point to be measured. A line is displayed between the two points and the value is displayed on the model. ▪ Click the third point to be measured. The line extends to the third point. ▪ Repeat to measure the total distance between additional points if required. ▪ Click Clear or right-click to remove existing points and select a new base point.

5.	Accumulate calculates the sum of several point-to-point measurements. ▪ Click Accumulate . Then click the start and end points of the first distance to be measured. A line is displayed between the two points. ▪ Click alternately on additional start and end points as needed. The sum of all the selected segments are displayed on the model. ▪ Click Clear or right-click to remove existing points and select a new base point.
6.	Angle calculates an angle between two lines. ▪ Click Angle . Then click on a point along the first line. ▪ Click on the first line at the point where the second line intersects. Finally, click on a point along the second line. ▪ The value is displayed on the model. ▪ Click Clear or right-click to remove existing points and select a new base point.
7.	Area calculates an area on a specific plane. ▪ Click Area . Then click on points along the perimeter of the area to be measured. Select as many points as required to obtain the accuracy you want. ▪ All the points added must lie on the same plane to be accurate. ▪ A line is displayed between the points and the value is displayed on the model. ▪ Click Clear or right-click to remove existing points and select a new base point.

The Measure Tools window can also be displayed when measuring to provide additional information on the measurements. To display this window, select the View tab, expand the Windows option, and enable Measure Tools or click on the Measure panel title bar on the Review tab. The Measure command icons on the Measure Tools window vary slightly from those on the ribbon. However, they can also be used to initiate a Measure command when the Measure Tools window is displayed. Hover your mouse over the icons to display a command tooltip.

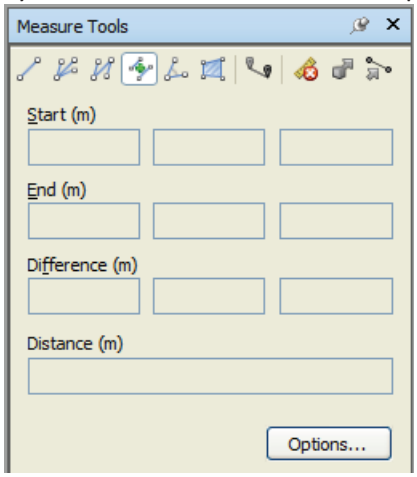

As selections are made on the model the locations of the start and end points are populated in the Measure Tools window and the Difference and Distance fields are calculated. The information in the Measure Tools window varies depending on the Measure command that is active. For example, when measuring an Angle or Area, the Distance field is changed to an Angle and Area field respectively.

Measuring Tool Options

The Measuring tools have a number of options for obtaining accurate measurements. The options can be accessed by clicking Options on the Measure Tools window or you can click Application Menu > Options > Interface > Measure.

Select options as needed.

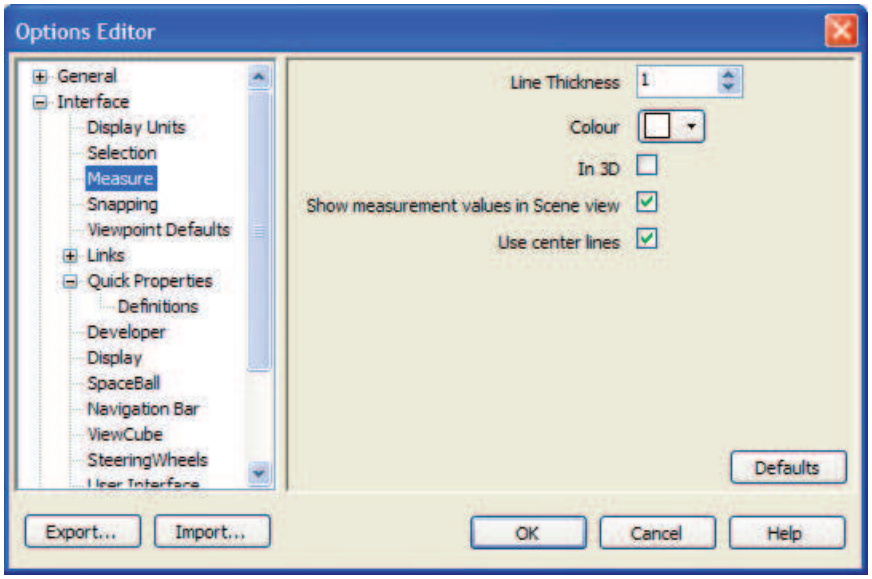

Exercise: Using the Measure Tools

In this exercise, you use the measure tools to extract information from the model.

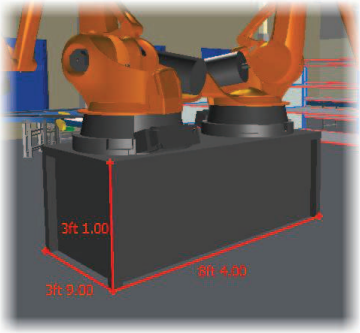

The Completed Exercise

1. Open **NAV_006_Measure_Tools.nwf**.
   - Click in the background to deselect.
   - Activate the Measure Viewpoint.

2. Check the current measurement options.
   - On the Application Menu, Click **Options**.

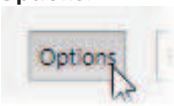

   - In the Options Editor, select Measure.

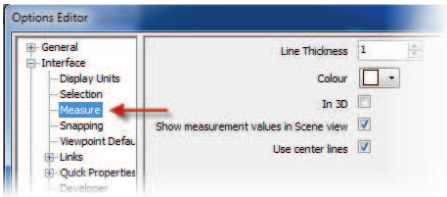

   - Review the options available. For this exercise we will use the default options.
   - In the Options Editor, select **Snapping**. Make sure the options are set as shown in the following image.

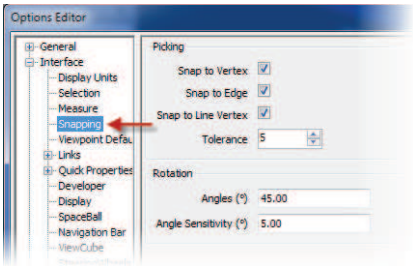

3. Open the Measure Tools window.
   - On the Review ribbon, click the expand button shown in the following image.

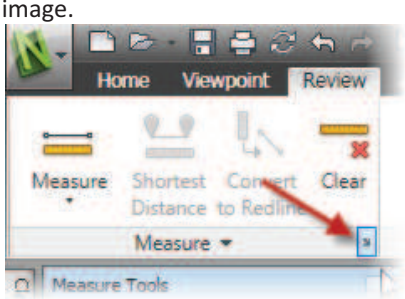

   - Pin the Measure Tools window open.

4. Measure the size of the Robot Table.
   - Start the **Point to Point** measurement tool located on the Measure flyout.

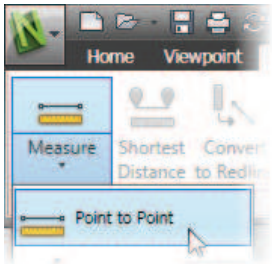

   - Select the two vertexes shown in the following image. Note the vertex snap symbol highlighted below.

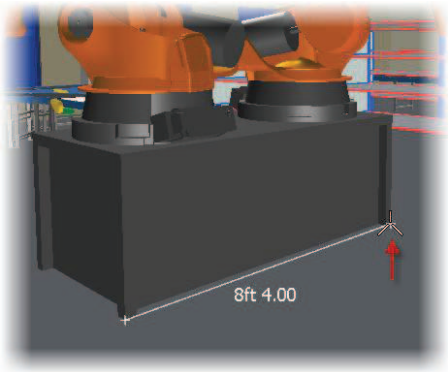

   - On the Measure Panel, click **Convert to Redline**. This converts the current measurement to a redline object. **Note**: A Viewpoint is automatically created to support the Redline.

- Add the additional measurements shown in the following image, converting each to a redline markup.

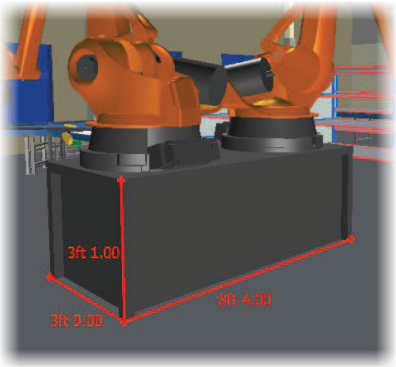

5. Measure the distance to the nearest column.
   - Using Edge Snaps, select the two edges shown in the following image. Note the highlighted edge snap below.

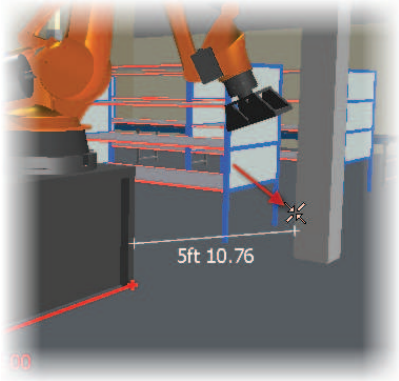

   - Review the distance values in the Measure Tools window. Note the linear distances is shown in the view, but the X, Y, and Z values are displayed in the Measure Tools window.

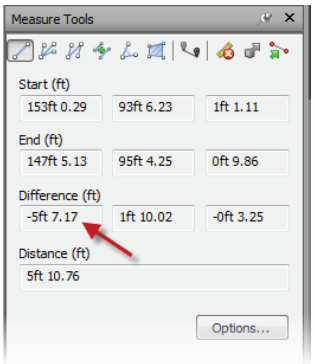

   - On the Measure Panel click the Clear tool.

6. Measure the size and position of the Blower.
   - Walk to the Blower component in the rear of the factory as shown in the following image.
   - Using the measure tools, determine the height and width of the machine and how close it currently is to the back wall.

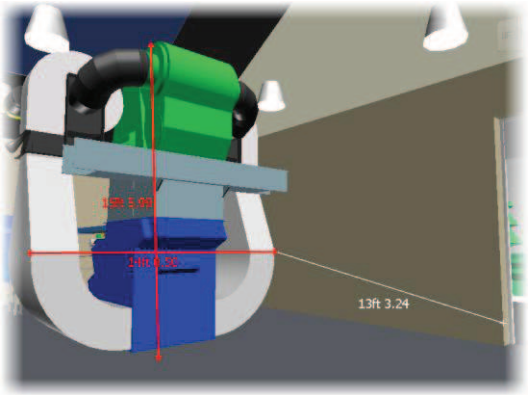

   - Open a New File without saving
   - End of Exercise.

Lesson: Cross Section Tools

Sometimes the detail you need to see is hidden behind other components in the design. The Cross Section tools allow you to display and inspect any area of your digital mockup.

With sectioning, you can make up to six sectional cuts in any plane and still be able to navigate around the scene. You view models inside without hiding any item. Viewpoints of section planes can be saved and used in animations to show a dynamically sectioned model.

Slices can also be created using multiple section planes and linking them as a slice. In this way the model can be navigated and the scene viewed as a slice in real time, and used in viewpoints and animations.

Procedure: To Create Sectioned Planes

1.	Select a saved viewpoint or manipulate the model to an orientation to begin sectioning from.
2	Select the Viewpoint tab and click Enable Sectioning in the Sectioning panel. The Sectioning Tools context-sensitive tab appears.
3.	In the Mode panel, ensure that Planes is enabled to define sections in the scene using planes.
4.	In the Current pull-down menu in the Plane Settings panel, select a plane to activate it. By default Plane 1 is activated. Notice in the pull-down menu that Plane1 is enabled as indicated by the yellow lightbulb icon. The remaining planes are not initially active.
5.	By default, each plane has a default Alignment already assigned (e.g., Top, Bottom, Front, and so on). To change this alignment, select the Alignment pull-down menu in the Planes Settings panel. The alignment options correspond to the faces of the ViewCube along with the following options: ▪ Click Align View to section through the model, parallel to the current viewpoint regardless of its viewing angle. ▪ Click Align to Surface to section through the model aligned with a selected surface. ▪ Click Align to Line to section through the model aligned to a selected line.
6.	To change the location of the sectioning plane in the model, select either the Move or Rotate commands in the Transform panel.
7.	Use the gizmo that appears on the plane in the Scene View to move/rotate the position of the plane in the viewpoint. To enter an exact positioning value, expand the Transform panel and enter coordinates or angular values.
8.	Enable additional planes by selecting them in the Current pull-down menu. Once enabled you can change their alignment or Move/Rotate them, as necessary.
9.	To disable a plane once it is displayed, select on the Planes Settings panel header and disable the plane's display in the Section Plane Settings window that appears.
10.	On the Save panel, click to save the Viewpoint. Enter Section1 as the name of the viewpoint.

Linking Section Planes

Use Link Section Planes to link two or more section planes together, forming a slice, and then use the gizmo or the Transform fields to move the slice through the model.

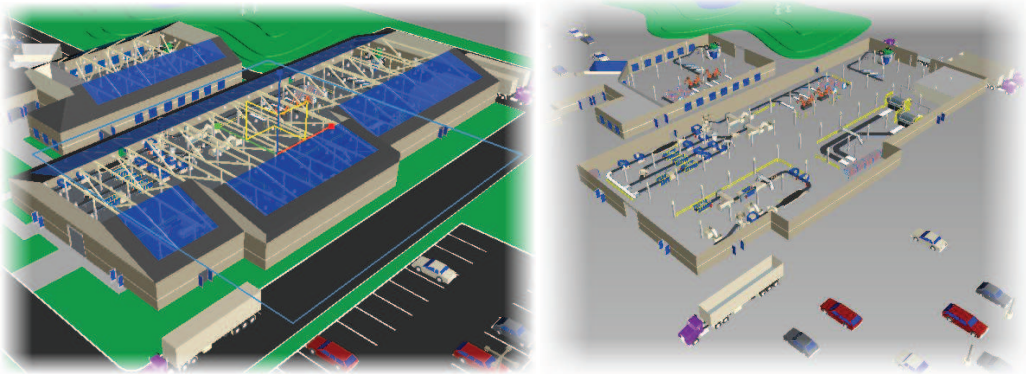

Procedure: To Link Section Planes

1.	Create all of the individual section planes that will be linked together.
2.	With the Sectioning Tools tab active, enable the appropriate planes that are required in the slice. The planes can be either parallel or perpendicular to one another.
3.	On the Planes Settings panel, click Link Section Planes to link the planes together.
4.	Use the gizmo that is displayed on the linked section planes or the Transform fields to move the slice through the model.
5.	Repeat the above steps for other planes if required.
6.	On the Planes Settings panel, click Link Section Planes again to disable the link.
7.	On the Save panel, click to save the Viewpoint. Enter a descriptive name for the viewpoint. **TIP:** Record the model as it is progressively sectioned, either using the gizmo or by setting up two views of the model in different states of section and then adding them to an empty animation.

Exercise: Sectioning

In this exercise, you create section planes to reveal interior detail for the factory building.

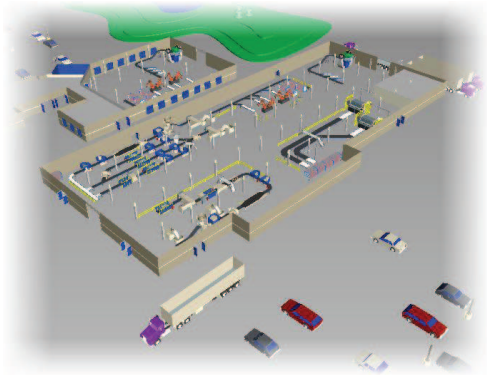

The Completed Exercise

1. Open **NAV_007_Section_Planes.nwf**.
   - Click in the background to deselect.
   - On the Viewpoint ribbon, click **Enable Sectioning**.

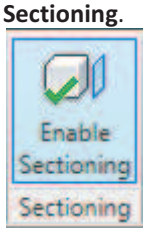

   - The model should appear as shown in the following image.

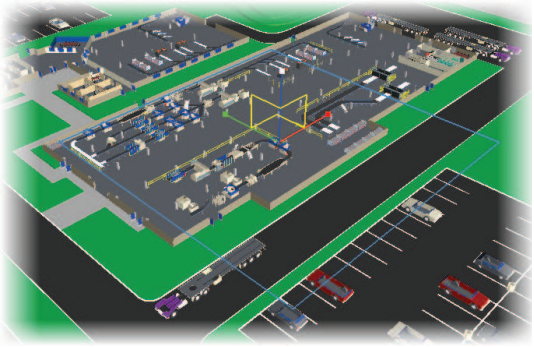

2. Move the Section.
   - In the Plane Settings panel, ensure that Plane 1 is displayed as the currently active plane in the Current pull-down menu. Pull-down the menu and notice that Plane1 is enabled as indicated by the yellow lightbulb icon. The remaining planes are not active.
   - By default, the Alignment option for Plane 1 is set to Top as shown in the Plane Settings panel. Ensure that Top is set as the alignment option
   - In the Transform panel, ensure that the Move command is enabled so that you can access the move gismo on the section plane.
   - Select the gizmo that is displayed with the plane. Drag the gizmo upwards to change the position of the plane in the model.
   - Place the plane as shown in the following image.

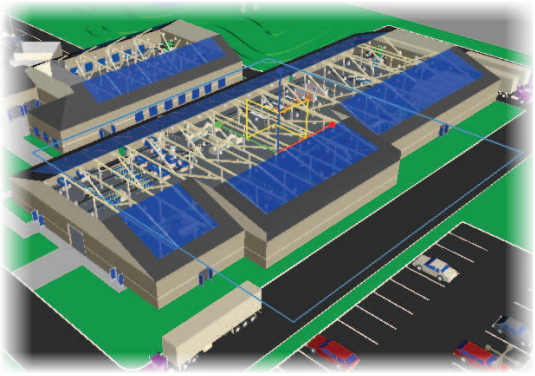

3. Activate a second Section Plane.
   - In the Plane Settings panel, select the Current pull-down menu and select **Plane 2** to enable it. Expand the Current pull-down menu again and notice that Plane 1 is also still displayed as indicated by the yellow lightbulb icon.

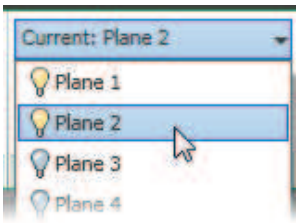

   Tip: To disable a plane once it is displayed, select on the Planes Settings panel header and disable the plane's display in the Section Plane Settings window that appears.
   - By default, the Alignment option for Plane 2 is set to Bottom. Maintain this setting.
   - In the Transform panel, ensure that the Move command is enabled. Using the Gizmo, drag the section plane to a position similar to the one shown in the following image.

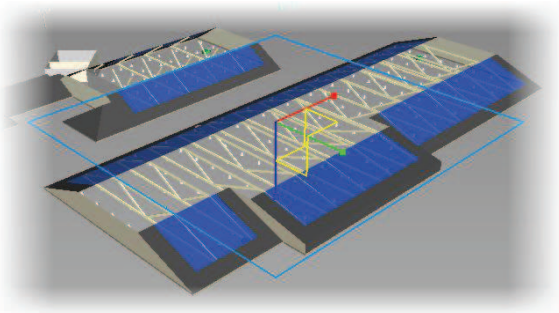

4. Link two Section Planes.
   - In the Plane Settings panel, click **Link Section Planes** to link section planes 1 and 2 together, forming a slice of the first floor.
   - Use the gizmo on the model to move the slice through the model

5. Save a Sectioned Viewpoint.
   - On the Save panel, click Save Viewpoint to save the Viewpoint. Enter Section1 as the name of the viewpoint.
   - While using section planes, you can use the navigation modes to review areas of interest in the model.

6. Turn Off Section Planes.
   - On the Plane Settings Panel, Click the small expand button.

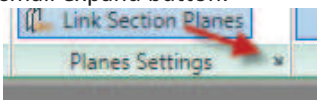

   - Clear the checkmark beside Plane 1 and 2. Also clear the check mark for Link Planes.

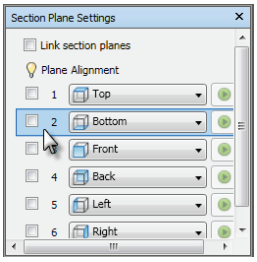

Challenge – Create a Section view similar to the one in the following image.

Hints:

- Use Plane 3
- Save a Viewpoint once the view is established.

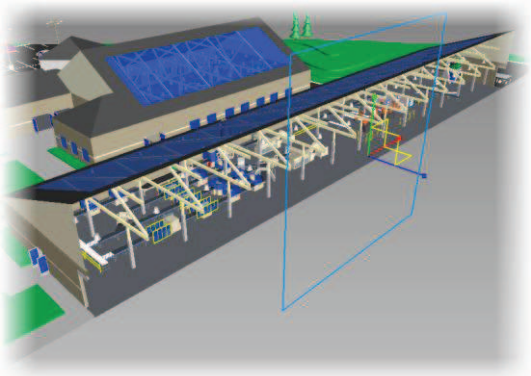

- Open a new file without saving.
- End of Exercise.

Lesson: TimeLiner

Navisworks TimeLiner creates 4D simulations (a simulation that includes time) of the construction of 3D models. By attaching items in the model to tasks with a start and end date/time, you can create a simulation that shows sections of the model being added or removed over time, according to the scheduled tasks.

With TimeLiner, you can also link the objects to tasks in an external scheduling file, and synchronize the simulation with the actual status of the project. Actual and planned dates can be associated with the tasks, simulating actual against planned schedules.

This lesson describes how to open and position the TimeLiner window within Navisworks. It also introduces you to the Task and Simulation tabbed panes and demonstrates playing a simulation of the construction of a 3D building.

Timeliner Task Window

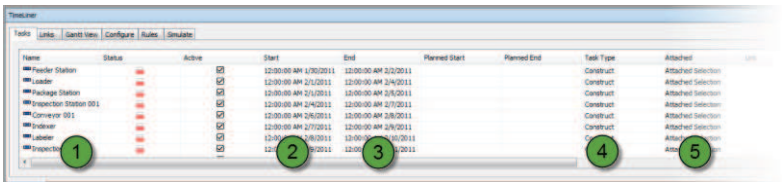

1.	Task Name
2.	Start Date
3.	End Date
4.	Task Type
5.	Attachment Status

Timeliner Simulate Window

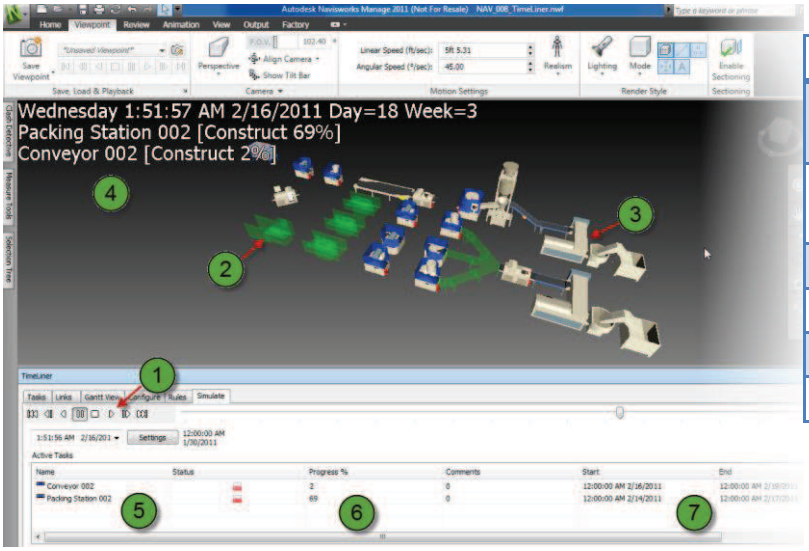

1.	Player Tools
2.	Work in Progress Visualization
3.	Completed Task Visualization
4.	On Screen Status Text
5.	Active Task
6.	Task Progress
7.	Start and End Date

Procedure: To Open and play a Timeliner Simulation

To open the TimeLiner window, select the Home tab and click TimeLiner  in the Tools panel. The TimeLiner window appears at the bottom of the Navisworks window. The Simulation tab in the Timeliner window contains the player controls.

Exercise: Run a Timeliner Simulation

In this exercise, you review an existing Timeliner simulation for the proposed construction process for the packaging line.

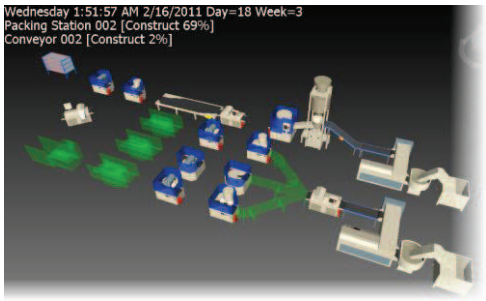

The Completed Exercise

1. Open **NAV_008_TimeLiner.nwf**
   - Click in the background to deselect.
   - Activate the ISO All Viewpoint.

2. Open the Timeliner Window.
   - On the Home tab in the Tools panel, click **TimeLiner**.

The TimeLiner window appears at the bottom of the Navisworks window.

3. Review the Task List.
   - Pin the Timeliner window open.
   - Review the Task List and the Start and End Date for each Task.

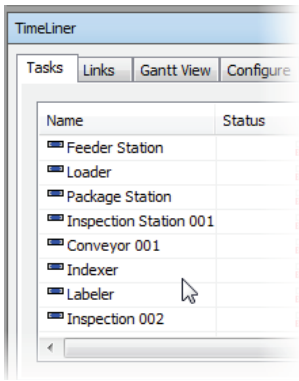

4. Simulate the Timeline
   - Click the Simulate tab in the Timeliner window.
   - Click the **Play** button and review the construction schedule timeline.

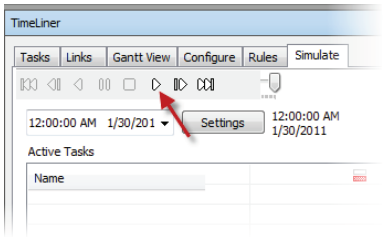

   - Drag the slider to any point in the simulation and use the navigation tools to explore the specific point in the construction timeline.

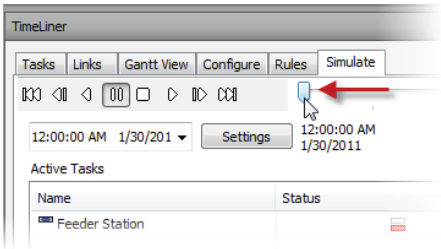

   - Review the current timeline information on the screen.

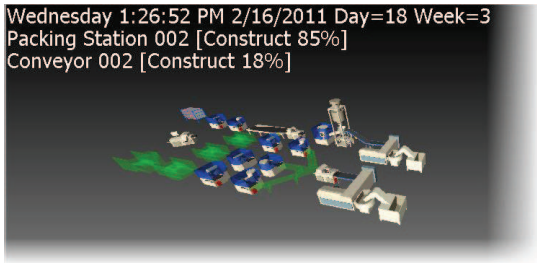

   - Open a new file without saving.
   - End of Exercise.

Chapter Summary

This chapter focused on the large layout Visualization tools that allow you to navigate thru a Navisworks design. The chapter also presented the available tools used to analyze the Digital Mockup of the factory layout.

Having completed this chapter, you can:

- Use the various Navigation tools available in Navisworks.
- Establish Viewpoints and Animations
- Use the Factory Layout and Item Tools to manipulate model geometry.
- Use the Measuring tools to add dimensions to a Viewpoint.
- Create user defined Cross Sections.
- Review a Timeliner example.

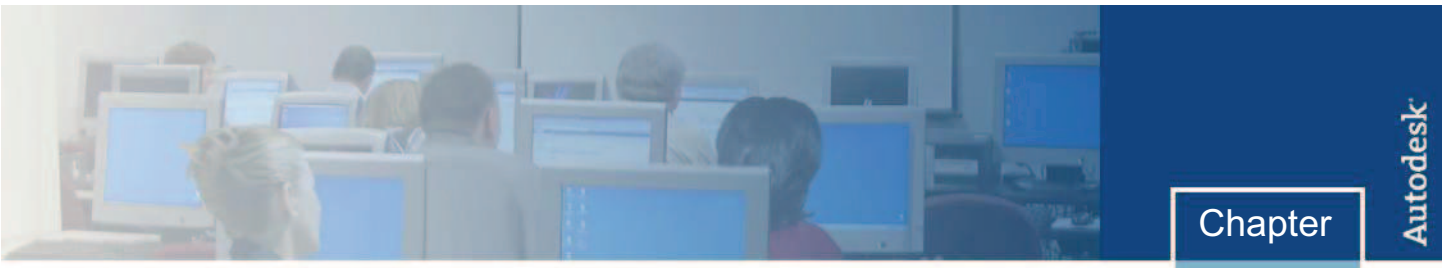

Chapter

15

Interference / Collaboration

3D interferences are very common when you are bringing multiple models together for the first time. These interferences must be discovered as quickly as possible to assure a quality design and reduce construction problems. Navisworks enables the effective identification, inspection and reporting of interferences from the digital model with a versatile set of Clash Detection tools.

The digital model of factory layouts, work cells and production lines can be inspected to detect potential issues such as equipment collisions and space restrictions. Navisworks also works with laser scanned point clouds. Large volumes of point clouds can be imported into the digital environment to compare the “as built” laser scan with the 3D model data.

Large designs often require input from various sources. Communicating the design intent to these sources is a crucial factor in the design process. Navisworks can publish the single digital model in high compressed, lightweight NDW and 3D DWF format for Free viewing. This gives all stakeholders access to the complete manufacturing plant or factory layout.

You can share your digital design with all the members of your design team. If members of your team don’t have Navisworks, they can download Navisworks Freedom from Autodesk.com. Navisworks Freedom allows anyone to view the NWD files created by Navisworks. Navisworks Freedom can also view Autodesk 3D Design Review files or 3D DWF.

Objectives

After completing this chapter, you will be able to:

- Use the selection tools to select model geometry.
- Setup and run a Clash detection based on model geometry.
- Setup and run a Clash Detection based on Point Clouds.
- Add Redline markups to a viewpoint.
- Collaborate with other team members utilizing the various export functions.

Lesson: Clash Detection

Clash Detection is an important feature for the initial review of a factory design. Interferences that are discovered during the construction process can cause major cost overruns. Navisworks Manage, delivers interference checking capability with the Clash Detection tools. **Note**: Clash Detection is only available in the Navisworks Manage version of the application, or Autodesk Factory Design Suite Advanced.

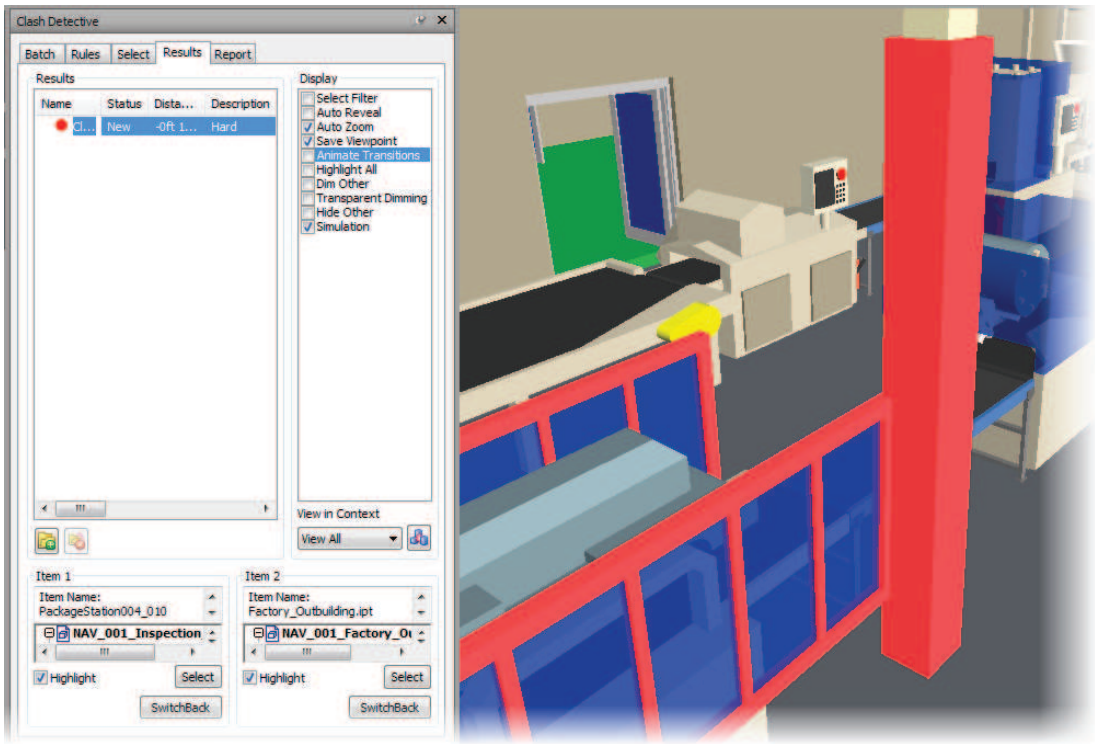

Objectives

After completing this lesson, you will be able to:

- Select geometry and create a selection set.
- Set up and run a Clash Detection between model geometry.
- Set up and run a Clash Detection between model geometry and a Point Cloud.

Clash Detection

Navisworks Clash Detective identifies, inspects, and reports interference clashes in a 3D project model. Clash Detective can eliminate a tedious manual task, with the accompanying risk of human error, to significantly reduce the expensive consequences of incomplete, inaccurate, and poorly coordinated design information.
You can use Clash Detective for a quick “sanity check” for design work that an engineer has just completed, or for an ongoing audit check of the project by the project coordinator.

Clash Detective can also conduct clash tests between traditional 3D geometry (triangles) and laser geometry. Clash test reports can be produced for communicating to other people. Batches of clash tests can be saved and exported to use in other projects.
By Linking Clash Detective and Object Animation together, you can check animated versus animated or animated versus static object clashes. For example, linking a Clash Detective test to an existing animation scene would automatically highlight clashes for both static and moving objects during the animation (for example, a crane rotating through the top of a building or a delivery truck colliding with a work group).
You can also link Clash Detective, TimeLiner, and Object Animation together for clash testing of fully animated TimeLiner schedules. So, instead of visually inspecting a TimeLiner sequence to make sure, for example, that the moving crane didn't collide with a work group, you can run a Clash Detective test.

This lesson describes how to open the Clash Detective window within Navisworks. It also introduces you to the Select tab for defining and running the clash test and Results tab for viewing the results.

Conducting a Clash Test

The Clash Detective window enables you to set up rules and options for your clash tests, view the results, sort them, and produce clash reports.

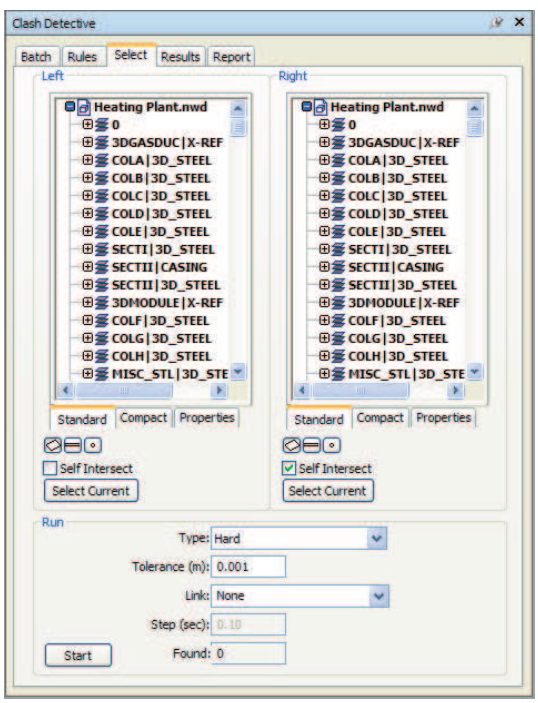

Procedure: To Conduct a Clash Test

1.	Select the Home tab and click Clash Detective in the Tools panel.
2.	Select the Select tab in the Clash Detective window. There are two identical panes in this tab called Left and Right. These panes represent the two sets of items that will be tested against each other during the clash test. **TIP:** The Left and Right panes in the Clash Detective window can be displayed in four view formats to aid in selecting items for clash testing. To change formats, select the Standard, Compact, Properties, or Sets tabs, as required. The Standard tab provides a full, expandable listing of the layers. The Compact tab provides a top-level listing of the layers. The Properties tab sub-divides the models according to its properties. If there are saved selection or search sets available, a Sets tab is also available. (Scroll to the right if necessary.) Using the Sets tab you can select from the lists to define the items to be tested.
3.	Click the required geometry type in the Left and Right panes. Clash tests can conducted on the following geometry types: ▪ **Surfaces** – Clashes item surfaces (default setting). ▪ **Lines** – Clashes items with center lines (e.g., pipes). ▪ **Points** – Clashes (laser) points. See Laser Scan Data Clashing for more information.
4.	In each of the Right and Left panes, select the items that are to be compared against. To select the items for the clash detection, use one of the following techniques: ▪ Select the items directly in the Selection Tree. Consider using the Standard, Compact, or Properties tabs to change the view formats when making selections. ▪ In the Scene View, select an item or set of items to be clashed. If required, press and hold CTRL to select multiple items. ▪ In the Clash Detective window, click Select Current below the necessary panes to assign the currently selected items in the Scene View to that pane. ▪ Select the Sets tab associated with either the Left or Right panes and select from the saved selection or search sets that already exist in the model. **NOTE: Items which have been hidden will not be included in a clash test.**

Clash testing can be faster, more effective, and easily repeatable if you use selection or search sets. Carefully consider which sets of objects will need clashing against each other and create selection and search sets accordingly.

Creating batch clash tests is another way to speed up clash testing.

5.	Clash Detective can clash test a selection against itself, in addition to clash testing against the set in the other pane. Add a check mark to the Self Intersect box for the Left, Right, or both panes, as necessary.
6.	Define the Clash type in the Type pull-down menu. There are three types of clashes: 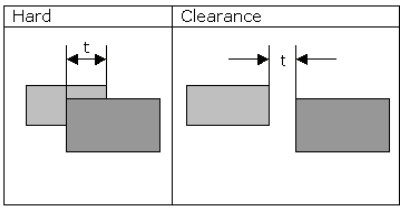 t = Tolerance ▪ **Hard –** Where two objects actually intersect. ▪ **Clearance –** Where two objects come within a specified distance of each other. ▪ **Duplicates –** Where two objects are identical, both in type and position.

You can use Duplicates testing to clash the entire model against itself by selecting the whole model in both the Left and Right panes. Use this to detect any items in the scene that may have been duplicated by mistake. For example, a multiple instanced item may have been inserted in the same place twice or a reference file was loaded twice (it was referenced by more than one file in the scene).

If you select Clearance, hard clashes are also detected. Any objects closer than the set tolerance and any interference are obviously less than the set clearance, as shown in the image above.

7.	Define the Tolerance that should be used in the test in the Tolerance pull-down menu (for 1mm enter 0.001).
8.	Click Start to begin the clash analysis. **NOTE:** The progress bar that appears during a clash test shows how far through the test Clash Detective has got. Press the Cancel button to stop the test at any time. All clashes processed before test termination are reported and the test will be saved with a Partial status. **TIP:** Before running a clash test, it may be useful to go the Rules tab and select one or more of the rule definitions. This filters out unnecessary clashes and makes the results more meaningful. See Setting Clash Rules.
9.	Details on the number of clashing instances are identified in the Found field on the Select tab. Select the Results tab to review a detailed list of the clash test results.

Lesson: Selection Tree and Selecting Objects

During any Clash Detection, it is necessary to select the desired objects to test. Navisworks provides access to all geometry in the Selection Tree. This section describes how to view items in the Selection Tree structure of files opened in Navisworks. It also introduces you to the selection options, and how to create sets of selected items.

View the Selection Tree

As a model is opened in Navisworks, the file name is added to the Selection Tree window.

- To display the Selection Tree window if it is not visible, select the Home tab, and on the Select & Search panel, enable Selection Tree .
- As an alternative, you can control the Selection Tree's display on the View tab by expanding the Windows option, and enabling Selection Tree.

From here, the model's hierarchical structure can be expanded, revealing the files, layers, and objects used to build the model.
Navisworks uses this hierarchical structure to identify object specific paths (a unique path through the model data from the root partition, the file name, to a particular object).

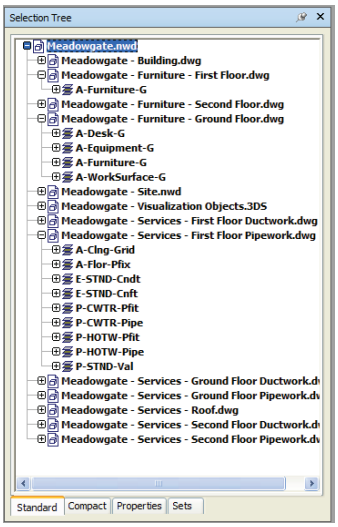

Selecting an Object

- Selecting an object in the Selection Tree also highlights it in the Navisworks Scene View.
- Selecting an object in the Navisworks Scene View using the Selection tool also highlights it in the Selection Tree.

> Use the ESC key to remove selection from an object in the scene and the Selection Tree.

Selection Resolution (Level)

When an item in the scene is selected using the Selection tool, individual geometry or a group of geometry may be selected depending on the setting of the Selection Resolution.

Procedure: To Change the Selection Resolution using the Options Editor

1.	To change the setting of the selection resolution, click Application Menu > Options > Interface > Selection > Resolution. 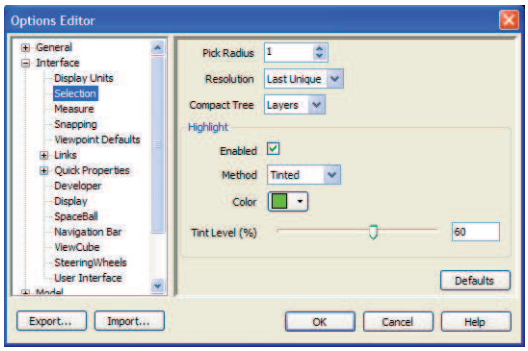
2.	Select the required option, and then click OK. **NOTE:** Any item in the Selection Tree can be selected regardless of the Selection Resolution setting for the Selection tool.

Procedure: Change the Selection Resolution using the Ribbon

1.	To change the setting of the selection resolution, expand the Select & Search panel on the Home tab and select a resolution setting from the Selection Resolution pull-down menu. 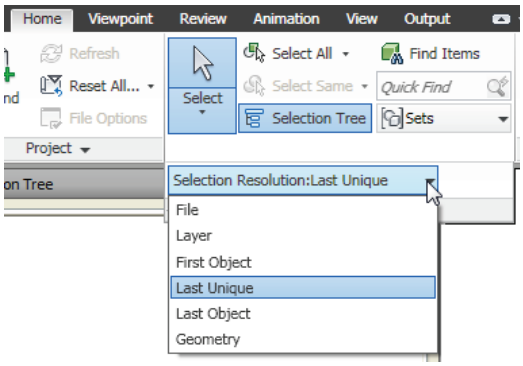
2.	Select the required option. **NOTE:** Any item in the Selection Tree can be selected regardless of the Selection Resolution setting for the Selection tool.

The available selection options are:

- **File** – Selects the appended portion of the selected model.
- **Layer** – Selects all objects within a layer.
- **First Object** – Selects the first object in the path that is not a layer.
- **Last Unique** – Selects the most specific object (furthest along the path) that is unique (not multiple instanced).
- **Last Object** – Selects the most specific item (furthest along the Selection Tree path) that is marked as a composite object. If no composite object is found, the geometry is selected.
- **Geometry** – Selects the last object in the path (most specific, may be multiple instanced).

Selection Sets

Selection sets can be used so that once a set of objects has been selected, they can be saved as a selection set, then used again as needed. This process greatly enhances the Clash Detection process.

Selection sets can be moved, reordered, or organized in folders if required.

Procedure: To Create and Organize Selection Sets

1.	On the Home tab, in the Select & Search panel, expand the Sets pull-down and click Manage Sets to open the Sets Window. As an alternative, select the View tab and on the Workspace panel, expand the Windows option, and enable Sets.
2.	To create a selection set, select the first item to be saved, then hold down CTRL, and select all the other items to be saved. **TIP:** Items can be selected on the scene, or in the Selection Tree. When selecting in the Selection Tree, you can use SHIFT to select a range of consecutive items.
3.	Right-click in the Sets window. Click Add Current Selection. The selection is saved as Selection Set 1.
4.	To save the selection set to an appropriate name, enter the new name and press ENTER. To rename an existing selection set, right-click the selection set and click Rename.
5.	To move a selection set to a different position, drag to the new position.
6.	To sort the list of selection sets alphanumerically, right-click in the Selection Sets window, and then click Sort.
7.	To create a folder, right-click in the Selection Sets window, and then click New Folder.
8.	To rename a folder, right-click the folder, and then click Rename. In the Folder name field, enter a new name for the folder and press ENTER.
9.	To move selection sets to a folder, select all sets to be moved, and drag to the folder.
10.	To sort the list of folders (and sets) alphanumerically, right-click in the Selection Sets window, then click Sort.

Exercise: Run a Clash Detection on Geometry

In this exercise, you create a Clash Detection analysis between the Inspection line and the columns of the factory out building.

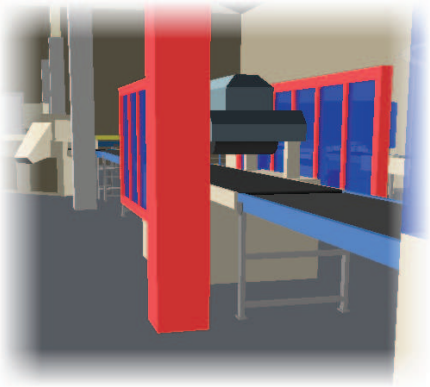

The Completed Exercise

1. Open **NAV_009_Clash_Detection.nwf**
   - Click in the background to deselect.
   - Activate the Clash Detection Viewpoint.

2. Create a Selection Set of the building columns.
   - On the Home ribbon, click the **Select** Tool.

   - Select one of the building columns as shown.

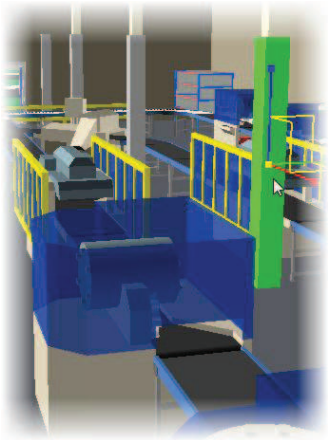

   - On the Select and Search panel, under Select Same, click **Select Same Geometry**.

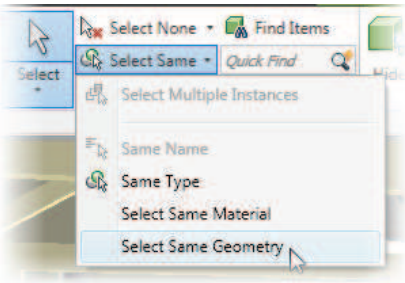

   - All building columns are selected as shown below.

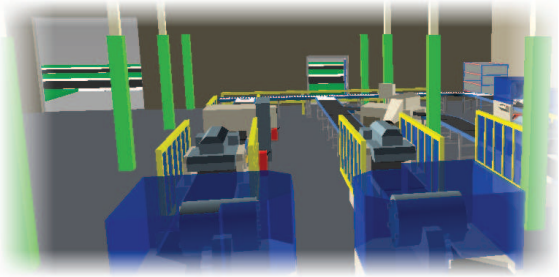

   - On the Select and Search panel, expand Sets and click **Manage Sets**.
   - Right Click in the Sets window and click **Add Current Selection.**

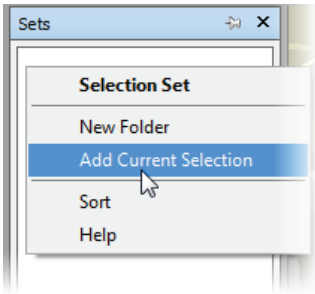

   - Name the new Selection Set **Columns** and press ENTER.
   - If necessary, click in the background to deselect.

3. Set up the Clash Detection.
   - On the Home ribbon click **Clash Detection**.

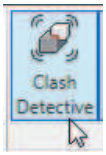

   - Pin the Clash Detection window open.
   - In the Clash Detection window, click the **Select** Tab.
   - In the left hand column, select **NAV_001_Inspection Line**.
   - At the bottom of the right hand column, select the Sets tab
     Note: you may have to scroll the tabs to the left.
   - On the Sets tab, select **Columns**.

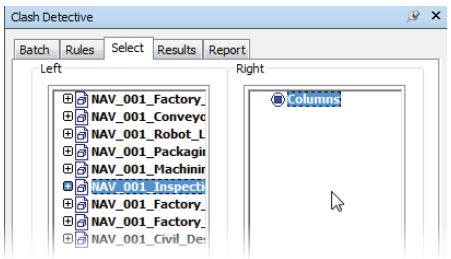

   - At the bottom of the Clash Detective window, set the Clash Type to **Hard**.

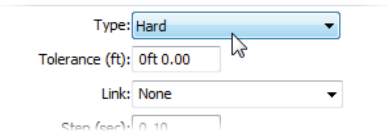

   - Click **Start** to run the analysis.

4. View the Results.
   - In the Clash Detective window, click the **Results** tab.

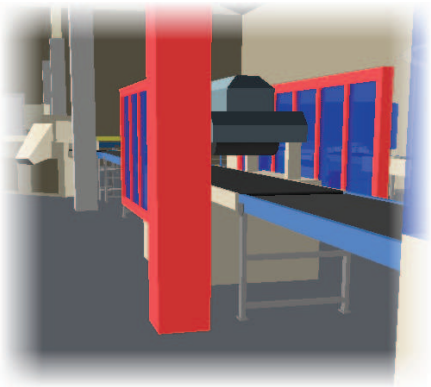

5. Explore the Interference.
   - Start the Walk tool and investigate the interference between the safety fence and the column.

6. Create a Viewpoint for future use.
   - Create a Viewpoint called **Safety Fence Clash.**

   - Start a new file without saving.
   - End of Exercise.

Lesson: Point Cloud Data Clashing

Increasingly, users are bringing laser scan data into Navisworks alongside traditional geometry based models. Laser scan data usually comes into Navisworks as a point cloud. You can use Clash Detective with these two types of data to check for interferences.

Running a Clash Test with Laser Scan Data

The value of being able to clash as-built point clouds with new-build designs is immense.
Traditional hard clash testing of surfaces involves looking for intersections of triangles (that the 3D surfaces are made from). Similarly, when hard clashing points against lines with surfaces, there must be an interaction in order for a clash to be recognized. This can be difficult with points (laser point cloud). Even if the point is on the surface, it will not be registered as a clash, as it is not large enough to pass through the surface.
For this reason, when clashing points and surfaces, a clearance type test is used to specify a tolerance around each point. This better represents the point cloud and therefore will identify any clashes.

Procedure: To Run a Clash Test with Laser Scan Data

1.	In the Clash Detective window, select the Select tab.
2.	Define the files that are to be clash tested. In one pane, select the point cloud data file and click Point to clash test the point cloud. Clear the other clash items. In the second pane, select the surface model and click Surfaces to clash test the point cloud data against surface data.
3.	In the Run area, set Type to Clearance and assign the required Tolerance value.
4.	Click Start to run the clash test.

Exercise: Run a Clash Detection between Geometry and a Point Cloud

In this exercise, you create a Clash Detection analysis to see if a Point Cloud of a Boiler system can be placed in the corner of the factory out building.

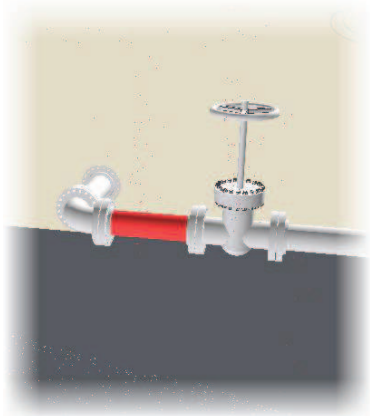

The Completed Exercise

1. Open **NAV_010_Point_Cloud.nwd**.
   - Click in the background to deselect.
   - Activate the Point Cloud Viewpoint.

2. Explore the Point Cloud.
   - A laser scan point cloud of an existing facility has been overlaid on the factory out building. Machinery from the existing facility is being evaluated for installation in the out building.
   - Using the walk command, explore the Point Cloud overlay
   - Turn off the Third Person avatar and navigate to the front of the out building where a point cloud of a boiler has been placed in the file. The desired point of view is shown in the following image.

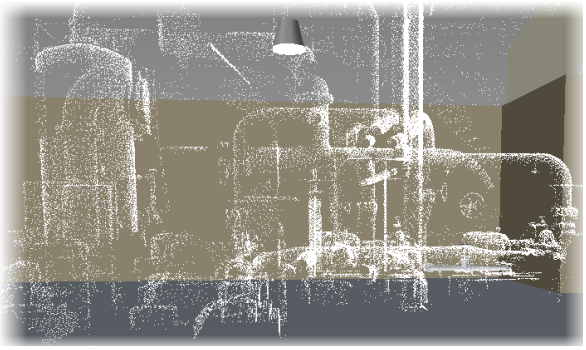

3. Set the Clash Detection.
   - Pin the Clash Detective window open.
   - On the Select tab, in the left hand column, select **Boiler Room.nwd**
   - In the right hand column, select **Pipe Run 001.nwc**.

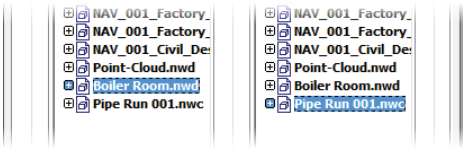

   - Click the point option for each column.

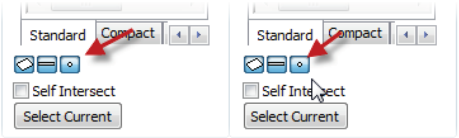

   - Set the Clash Type to **Clearance** and enter a tolerance of **.0833**.

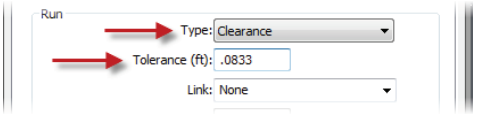

   - Click **Start**.

5. View the Results
   - Click the Results and investigate the results.

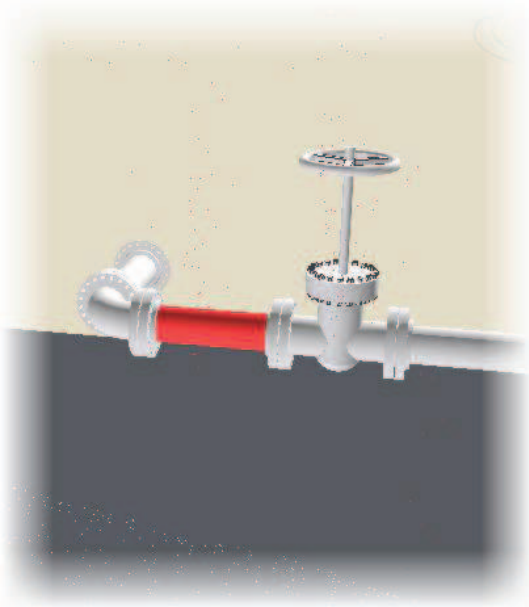

   - Open a new file without saving.
   - End of Exercise.

Lesson: Collaboration

Navisworks digital models can be shared with all members of your collaborative team. The highly compressed NWD files provide an efficient way of communicating the entire model and design intent to all stakeholders. 3D design intent and model data are more reliably and quickly communicated, facilitating better team collaboration, and accelerating the design review cycle, assuring delivery of projects on time and on budget.

Communication between team members is extremely important. When design problems occur, stakeholders need a method to comment on the situation. The Navisworks Redline tools allow designers to markup any pre-established Viewpoint with text, balloons, clouds, or geometry. These markups can be exported in the NWF file format which is unique to each stakeholder. Then the markups can be merged with other comments bringing the entire collaborative project into a single document. The single standalone document is saved using the NWD file format. NWD files are standalone and can be viewed by anyone using the Navisworks Freedom viewer available at Autodesk.com.

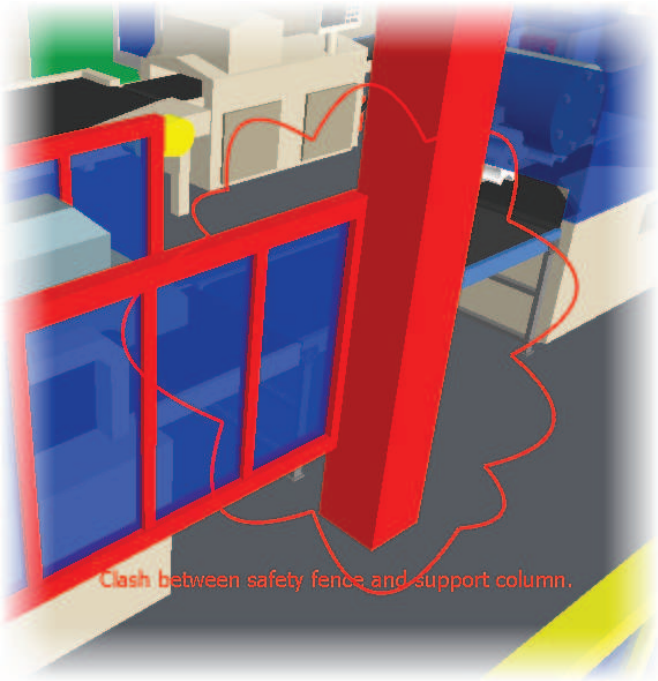

Objectives

After completing this lesson, you will be able to:

- Use the Redline tools to markup a viewpoint.
- Utilize the free viewer for Navisworks files, Navisworks Freedom.
- Review the available Export options for team collaboration.

Lesson: Redline Tools

Redlining can be associated with saved viewpoints and clash detection result views.

1.	On the Review tab in the Redline panel, select the Draw pull-down menu to access the redline tools. 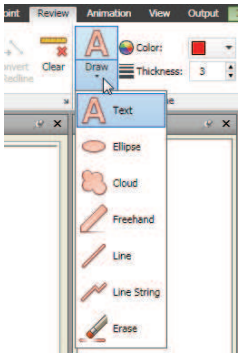
2.	In the Redline panel, select settings for the line (Thickness and Color) before using the tools.

Icon	Name	Description
	Text	Adds text in the viewpoint. Click the location where the text is to be placed. Enter text in the Text window, then click OK to add to the viewpoint.
	Ellipse	Creates an ellipse. Drag over the viewpoint and then release the mouse.
	Cloud	Creates a cloud. Click in the viewpoint for each of the cloud base points. Select the start point to close the cloud.
	Freehand	Creates freehand redlines. Drag in the viewpoint, then release the mouse.
	Line	Creates a single segment linear redline between a start and end points. Click in the viewpoint at the start and end points of the desired lines.
	Line String	Creates linear strings of lines. Click in the viewpoint at the start, intermediate, and end points of the desired lines.
	Erase	Erases redlines. Drag over the redline to be deleted, then release the mouse. The entire redline must be enclosed in the box for the erase function to be applied.

Redline Tags

Redline Tags combine the features of redlining, viewpoints, and comments into a single, easy-to-use review tool. This allows you to tag anything you want to identify in the model scene. A viewpoint will be created and you can add a comment and status to the tag. For example, during a review session, you may observe an item in the scene that is incorrectly sized or positioned. You can then tag this item, identifying the problem. If a tag is added the Add Comment dialog box is displayed, and you can add a comment.

Procedure: To Add a Redline Tag

1.	On the Review tab in the Tags panel, click Add Tag . Click the object where the tag is to point to, then click where the tag label is to be located. The tag is added.
2.	In the Add Comments dialog box, enter the text for the tag, and then select a Status option.
3.	Click OK to save the comment. A tag viewpoint is created (you can rename it). **NOTE:** Additional Redline Tags can be added to anywhere on the model. Each tag is numbered in the sequence that it was added.

Reviewing Redline Tags

There are a variety of methods for finding Redline Tags including the following:

- On the Review tab in the Comments panel, click Find Comments . Use the Find Comments dialog box to do the following:
  - Click the Comments tab to search for comments that are associated with tags. Search for a specific tag, text, author, ID, or status.
  - Click the Date Modified tab to search for comments within a date criteria.
  - Click Source tab to search for comments created in certain sources.
  - Click Find to search the model. Tip: Leave the search fields blank to search for all comments and tags.
- If viewpoints have been created for each tag, browse the Viewpoints window for the required tag ID.
- Select the tag in the Saved Viewpoints window and review the comment in the Comments window.
- To navigate directly to a tag when you know its Tag number, select the Review tab and in the Tags panel, enter the tag number or select a number from the pull-down menu and click .
- To renumber tags, select the Review tab, expand the Tags pane and click Renumber Tag IDs.

Exercise: Redline a Viewpoint

In this exercise, you document the clash between the safety fence and the support column by adding Redline markups to a viewpoint.

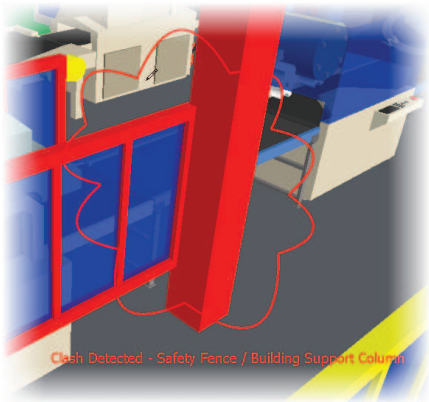

The Completed Exercise

1. Open **NAV_011_Redline.nwf.**
   - Activate the ISO All Viewpoint.
   - If necessary, click in the background to deselect.
   - Activate the Safety Fence Clash Viewpoint.

2. Change the color of the clashing components by adding a color override.
   - On the Home ribbon, set the Selection Resolution to **Geometry**.

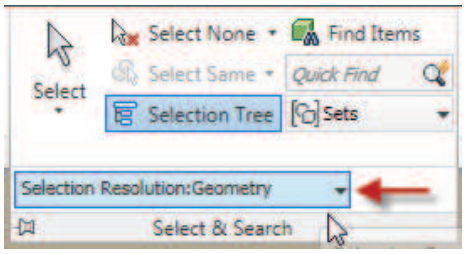

   - Activate the Select tool and select the safety fence and the support column. **Note**: Hold the CTRL button down to select both components.

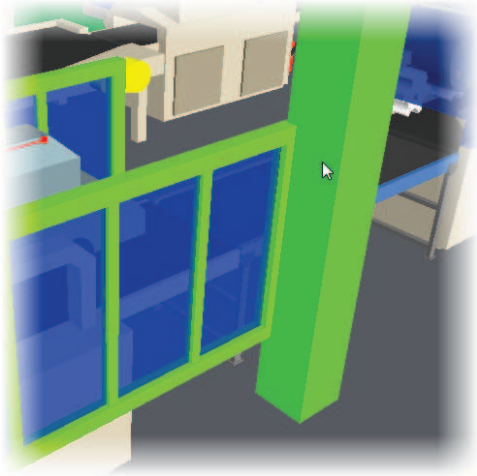

   - Right Click and select Override Item > **Override Color**.

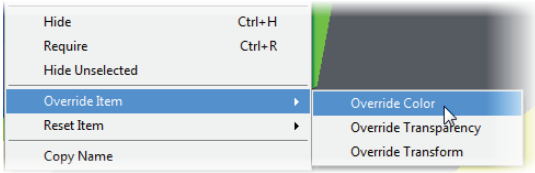

   - Set the color to Red and click OK.

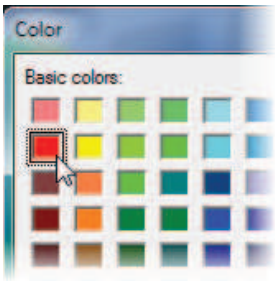

   - On the Home ribbon, click the Select None tool to clear the selection.

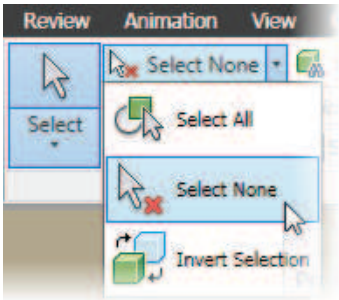

7. Add the Redline Markups to the Viewpoint.
   - Click the **Review** tab.
   - On the Redline panel, click the **Text** Tool.

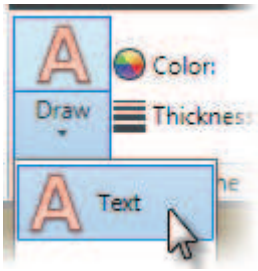

   - Click a spot below the interference and enter the text shown in the following image.

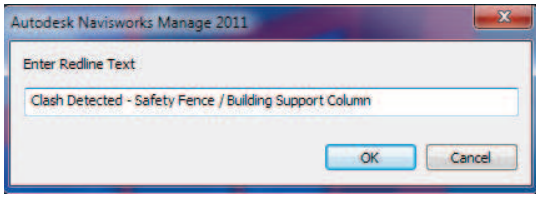

   - Click **OK**.

8. Add a Redline Cloud.
   - Use the **Cloud** tool and click multiple points in a clockwise motion around the interfering components as shown in the following image.
     Note: Right Click finish the Cloud.

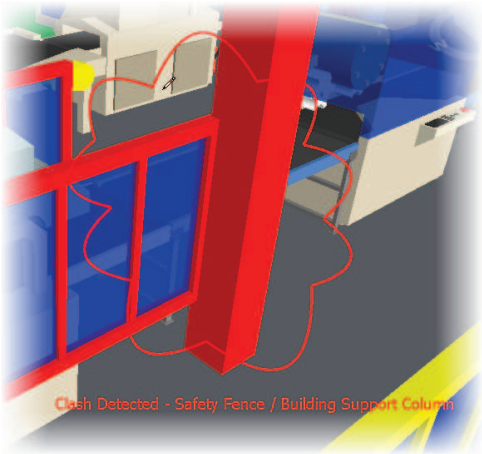

5. Export the Viewpoint to share with other team members.
   - Right Click the Safety Fence Clash Viewport and select **Edit** from the menu.
   - In the Edit Viewpoint dialog, place a check mark in the **Override Material** option.

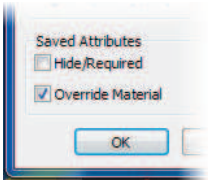

   - Click the **Output** tab.
   - On the Export Data panel, click the **Viewpoints** tool.

   - In the Export dialog, use the default name and save the .XML file in the Training Files directory.
   - Click **OK**.
   - Start a new file without saving.

6. Open **NAV_011A_Factory.nwf**.
   - Click in the background to deselect.
   - Notice that there are now Viewpoint in this file.
   - On the Application Menu, Click **Import > Viewport XML**.

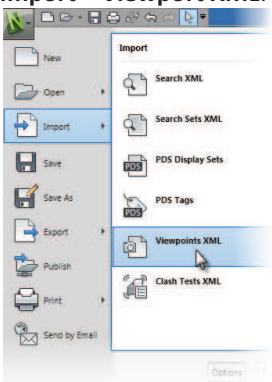

   - In the Import dialog, select **NAV_011_Redline**.
   - Click **OK**.
   - All Viewpoints from the previous file are not available in this file. Activate the Safety Fence Clash Viewpoint.
   - Start a new file without saving.
   - End of Exercise.

Lesson: Export Data

Collaborating with team members can often require sharing data in various forms. Each team member could be working with different CAD software or require the data in another format. Navisworks can export design data collected from the complete design in a number of different formats. This section will outline the various export capabilities located on the Output ribbon.

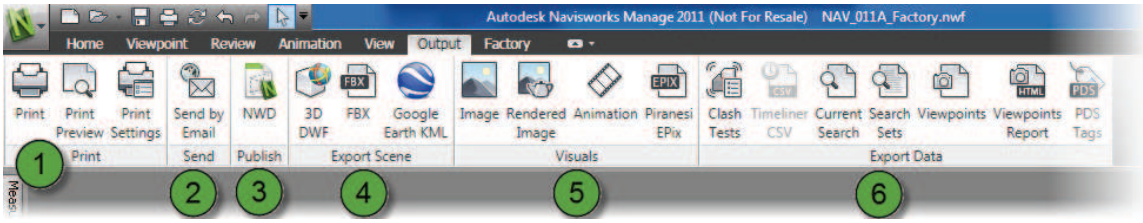

1. Print	 Print	When the print option is selected, Autodesk Navisworks prints the current viewpoint scaled to fit and centered on the page.
	 Print Preview	Before you print out a copy of the model you are working on, you may wish to see how it will appear.
	 Print Settings	This option enables you to the set up paper size and orientation options.
2. Send by Email	 Send by Email	Launched your Email application and attaches the file.
3. Publish NWD	 NWD	Publishes the complete Navisworks file as a standalone document. This format can be viewed in the Navisworks Freedom viewer available, for free, at Autodesk.com
4. Export Scene	 3D DWF	3D DWF files can be exported from Autodesk Navisworks. The file exporter creates a DWF file containing: ▪ All geometry ▪ All materials ▪ Per-vertex colors ▪ Properties (where available) **Note**: 3D DWF files can be viewed in the Navisworks Freedom viewer available, for free, at Autodesk.com
	 FBX	FBX files can be exported from Autodesk Navisworks. The exporter creates an FBX file with the extension .fbx and supports the export of: ▪ Triangles ▪ Lines ▪ Materials (color, flat transparency, and wrapped image texture only) ▪ Viewpoints ▪ Lights ▪ Model Hierarchy

	Google Earth KML	Google Earth KML files can be exported from Autodesk Navisworks. The exporter creates a compressed KML file with the extension .kmz and supports the export of: • Triangles • Lines • Materials (color and flat transparency only) • Viewpoints (adjustments may occur due to Google Earth limitations) • Model Hierarchy • Hyperlinks (currently only URLs work correctly in Google Earth)
5. Visuals	Image	To export an image as a bitmap, PNG, or JPEG file 1. Display the view you want to export in the Scene View, and click Output tab > Visuals panel > Image. 2. In the Image Export dialog box, select the Format of the image you want to export. 3. Use the Size and Options area to set the image size. See Image Export Dialog Box. ▪ For PNG files, click the Options button, and use the PNG Options dialog box to specify the Interlacing and Compression settings. ▪ For JPEG files, click the Options button, and use the JPEG Options dialog box to specify the Compression and Smoothing settings. 4. Click OK. 5. In the Save As dialog box, enter a new filename and location, if you want to change from those suggested. 6. Click Save.
	Rendered Image	Scenes rendered in Presenter can be exported out as images, so they can be used in presentations, on websites, in print, and so on. For more information,
	Animation	To export an animation to an AVI file, or a sequence of image files 1. Click Output tab > Visuals panel > Animation. 2. To export the currently selected viewpoint animation, select Current Animation in the Source box. ▪ To export the currently selected object animation, select Current Animator Scene in the Source box. ▪ To export a TimeLiner sequence, select TimeLiner Simulation in the Source box. 3. Set up the rest of the boxes in the Animation Export dialog box, and click OK. For more information, see Animation Export Dialog Box. 4. In the Save As dialog box, enter a new filename and location, if you want to change from those suggested.

		5. Click Save.
6. Export Data		Clash tests can be exported from the Clash Detective tool for use by other Autodesk Navisworks users.
		You can export CSV data from TimeLiner. The columns exported, and their order, will be precisely as in the TimeLiner Task View. Note: When exporting a CSV from TimeLiner, the hierarchy of tasks is not represented. All available tasks are exported without any hierarchical structure. This means that collapsing/expanding task nodes in the TimeLiner grid does not affect whether or not tasks are output to CSV.
		The search criteria specified in the Find Items window can be exported to an XML file. This can then be imported into other Autodesk Navisworks sessions. For example, if you have specified a complicated search criteria, containing various logic statements, that relates to all projects you work on, then this feature allows you to specify it once and use it on all projects.
		Saved search sets can be exported from Autodesk Navisworks as an XML file. These can then be imported into other Autodesk Navisworks sessions and re-used. For example, if you have a number of generic searches that you perform on all of your projects, this feature allows you to specify the searches once and use them on all projects.
		Viewpoints can be exported from Autodesk Navisworks to an XML file. These viewpoints contain all associated data, including camera positions, sections, hidden items and material overrides, redlines, comments, tags and collision detection settings. Once the viewpoint data is exported to this text-based file format, it can either be imported into other Autodesk Navisworks sessions, or it can be accessed and used in other applications. For example, you may want to set up the same viewpoints in your CAD application.
		An HTML file can be exported containing a JPEG of all of the saved viewpoints and associated data, including camera position and comments. **Note**: To customize the appearance or layout of the HTML file, you will need to edit the viewpoints_report.xsl file. The installed file is located in the style sheets subdirectory of the Autodesk Navisworks install directory. You can copy the edited file to the style sheets subdirectory of any of the Autodesk Navisworks search directories.

Exercise: Export an AVI file.

In this exercise, you generate an video (.avi) file of a fly through animation.

The Completed Exercise

1. Open **NAV_012_Export_AVI.nwf**.
   - Click in the background to deselect.
   - Activate the Fly Thru Viewpoint.
     Note: A preset fly thru animation has already been created for this exercise.

2. Review the Fly Thru Animation.
   - In the Saved Viewpoint window, select the Fly Thru Animation.
   - Click the **Animation** tab.
   - Confirm that the Fly Thru animation is displayed in the Playback panel and click the Play button.

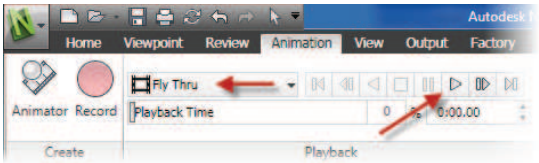

3. Export the Video File.
   - Click the **Output** Tab.
   - On the Visuals Panel, click the **Animation** tool.

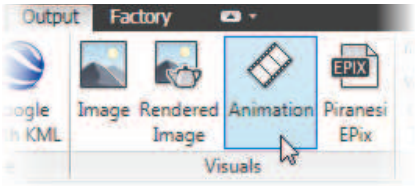

   - In the Animation Export dialog, set all options as shown in the following image.

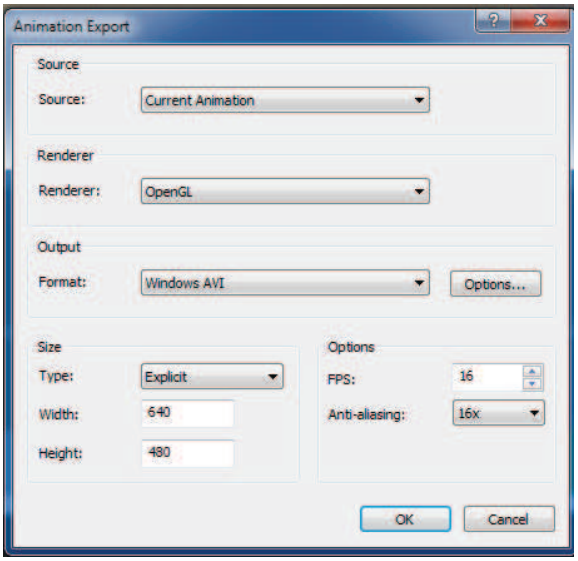

   - Click **OK**.
   - Specify the save location as the Training Files directory and click **Save**.

4. Play the video file.
   - In Windows Explorer, navigate to file location specified in the previous step.
   - Open and review the video file.
     Note: for the sake of time the video length was set to 10 seconds. Longer time spans and greater anti-aliasing values will result in longer rendering time.

   - End of Exercise.

Chapter Summary

This chapter presented essential tools used to analyze design interferences between multiple CAD models. The chapter also demonstrated how to share your findings by adding Redline information to Viewpoints and exporting the Viewpoints for other team members to review. Finally, the process of exporting design data from Navisworks was also covered.

Having completed this chapter, you can:

- Use the selection tools to select model geometry.
- Setup and run a Clash detection based on model geometry.
- Setup and run a Clash Detection based on Point Clouds.
- Add Redline markups to a viewpoint.
- Collaborate with other team members utilizing the various export functions.